2535 PULGAS AVENUE

EAST PALO ALTO, CALIFORNIA

PLANNING APPLICATION SUBMISSION JUNE 12, 2020

CONTACT

CLIENT / OWNER

Sycamore Real Estate
2555 Pulgas Ave. Building A
East Palo Alto, CA 94303
Phone: 415.213.4108
Contact: Lorenzo Brooks
Email: lorenzo@emersoncollective.com

DESIGN ARCHITECTS

William McDonough + Partners
700 E. Jefferson Street
Charlottesville, VA 22902
Phone: 434 979 1111
Website: www.mcdonoughpartners.com
Contact: Alastair Reilly
Email: areilly@mcdonough.com

LANDSCAPE ARCHITECT

Rana Creek
27875 Berwick Drive, Suite A
Carmel, CA
Phone: 831 659 3820
Website: www.ranacohabitat.com
Contact: Aaron Ackerman
Email: aackerman@ranacreekdesign.com

CIVIL ENGINEERS

BKF Engineers
255 Shoreline Drive, Suite 200
Redwood City, CA 94065
Phone: 650 482 6462
Website: www.bkf.com
Contact: Lokelani Yee
Email: lyee@bkf.com

LIGHTING

Luma Lighting Design
48 Golden Gate Avenue
San Francisco, CA 94102
Phone: 971 220 1715
Website: www.lumald.com
Contact: Gabrielle Serriere
Email: gabrielles@lumald.com

PROJECT DATA

A. ZONING DESIGNATION

CURRENT ZONING DESIGNATION:
RAVENSWOOD EMPLOYMENT CENTER (REC)
RAVENSWOOD / 4 CORNERS TOD SPECIFIC PLAN

GENERAL INDUSTRIAL
VISTA 2035 GENERAL PLAN

PROPOSED ZONING DESIGNATION:
MIXED-USE CORRIDOR (MUC)

MAXIMUM FLOOR AREA RATIO : 1.0
MAXIMUM HEIGHT : FIVE STORIES ABOVE GRADE

MINIMUM BUILDING SETBACKS :

FRONT : 10 FEET
SIDE : 10 FEET
EXTERIOR SIDE : 10 FEET
REAR : 20 FEET

MINIMUM PARKING :
PROFESSIONAL OFFICE - 1 PARKING SPACE PER 300 SF OF FLOOR AREA

BICYCLE SPACES :
1 PER 6000 SF OF OFFICE (75% CLASS I , 25% CLASS II)

LOADING AREAS :
DESIGNATED LOADING AREAS SHALL BE LOCATED REAR OR INTERIOR SIDE YARD

LANDSCAPING : A MINIMUM OF 5% OF THE AREA OF EACH INDIVIDUAL PROJECT SITE SHALL BE DEVOTED TO LOW WATER USAGE LANDSCAPING WITH A MINIMUM 10 FEET OF LANDSCAPING BETWEEN SURFACE OR STRUCTURED PARKING AREAS AND PUBLIC STREETS.

B. OCCUPANCY TYPE
BUSINESS GROUP B

C. TYPE OF CONSTRUCTION
TYPE III-A

D. HEIGHT OF NEW BUILDINGS
BUILDING 65' (FROM AVG. EL.@PULGAS R.O.W.) 62' (FROM GRADE)

E. SITE AREA
PARCEL 2535 168,180 SF (3.86 ACRES)

F. PROPOSED BUILDING USE
OFFICE

G. DEVELOPMENT AREA AND FAR
ALLOWABLE FAR = 1.0

PROPOSED FAR
BUILDING *103,646 SF (FAR 0.616)*

H. ADDITIONAL BUILDING AREA NOT COUNTED TOWARD FAR
N/A

I. PARKING AND LOADING DATA

PROPOSED PARKING	REQUIRED	PROVIDED
SURFACE PARKING (@ 1/300 , 40% COMPACT)	337 STALLS	357 STALLS
ADA ACCESSIBLE SPACES (INCL. 2 VAN ACC.)	9 STALLS	9 STALLS (2 VAN)
EV READY SPACES (6% OF TOTAL)	22 STALLS	22 STALLS
CLEAN AIR / VANPOOL / EV (2% OF TOTAL)	7 STALLS	8 STALLS
BICYCLE SPACE (5% OF CAR PARKING REQUIRED)	18 SPACES	18 SPACES
LOADING SPACE (@10'X40')	1	1

J. LANDSCAPE REQUIREMENT
MINIMUM 5% OF TOTAL LOT AREA (= 8,408 SF)

PROVIDED - *19,580 SF (11% OF TOTAL LOT AREA)*

VICINITY MAP

NOT TO SCALE

N

SHEET INDEX

PROJECT

2535 PULGAS AVENUE
EAST PALO ALTO, CALIFORNIA

DESIGN ARCHITECTS

WM+P
WILLIAM McDONOUGH + PARTNERS
ARCHITECTURE AND COMMUNITY PLANNING
700 E. JEFFERSON ST.
CHARLOTTESVILLE, VA 22902
T 434.979.1111 F 434.979.1112
WWW.MCDONOUGHPARTNERS.COM

ARCHITECT OF RECORD

CONSULTANTS

STATUS
PLANNING APPLICATION

ISSUE

ISSUE

MARK	DATE	DESCRIPTION
	06/12/2020	100% PLANNING APPLICATION

PROJECT NO: 21811
DRAWN BY: JLA
CHECK BY:

SHEET TITLE / SHEET NUMBER

PROJECT DATA, VICINITY MAP AND SHEET INDEX

01

NOT FOR CONSTRUCTION

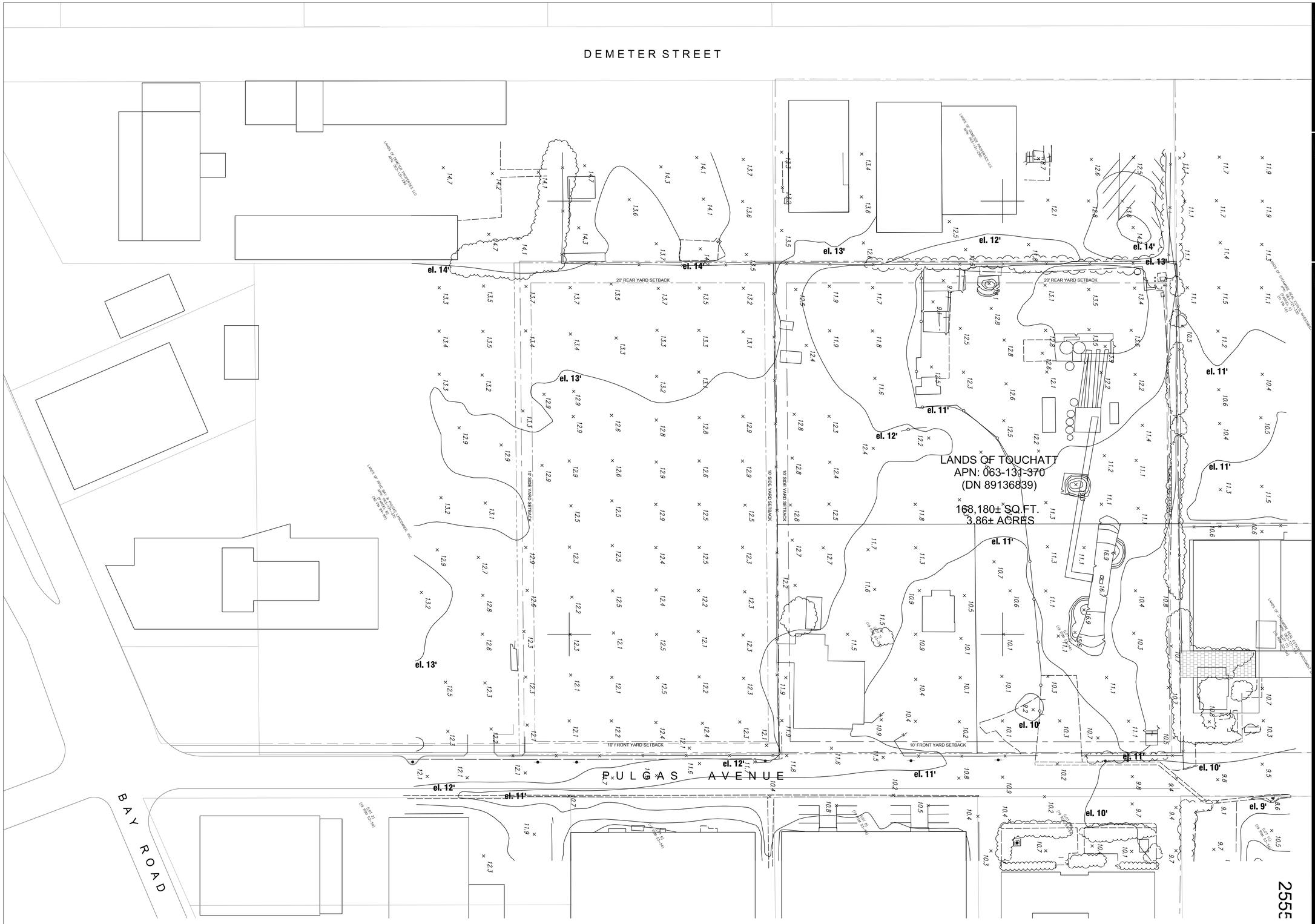

1 SITE SURVEY

0' 20' 40' 80'

N

PROJECT

2535 PULGAS AVENUE
EAST PALO ALTO, CALIFORNIA

DESIGN ARCHITECTS

WM+P

WILLIAM McDONOUGH + PARTNERS
ARCHITECTURE AND COMMUNITY PLANNING

700 E. JEFFERSON ST.
CHARLOTTESVILLE, VA 22902
T 434.979.1111 F 434.979.1112
WWW.MCDONOUGHPARTNERS.COM

ARCHITECT OF RECORD

CONSULTANTS

STATUS

PLANNING APPLICATION

ISSUE

ISSUE

MARK	DATE	DESCRIPTION
	06/12/2020	100% PLANNING APPLICATION

PROJECT NO:	21811
DRAWN BY:	JLA
CHECK BY:	

SHEET TITLE / SHEET NUMBER

SITE SURVEY

02

NOT FOR CONSTRUCTION

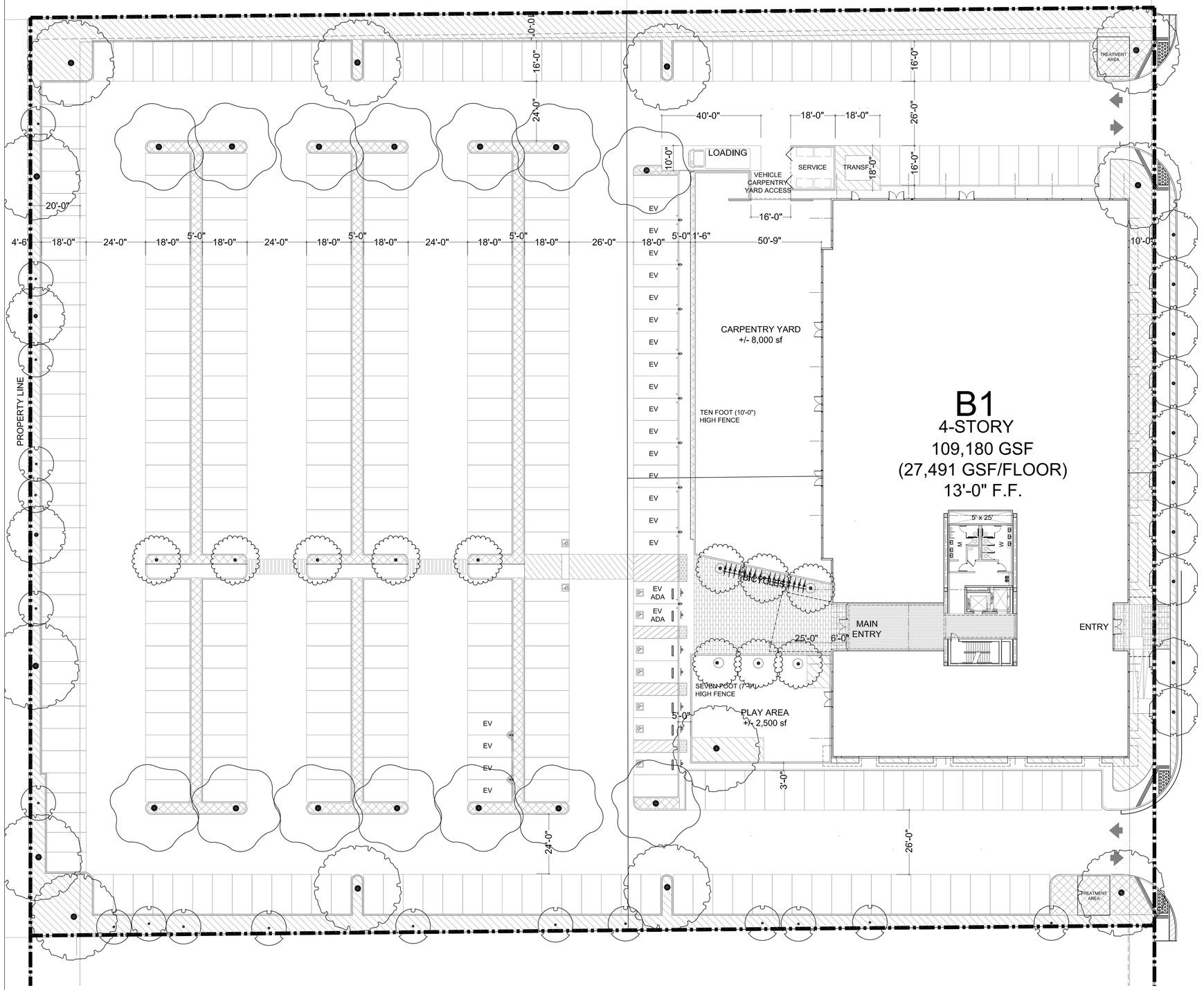

1 SITE PLAN - GROUND LEVEL

0' 10' 20' 40'

N

PROJECT

2535 PULGAS AVENUE
EAST PALO ALTO, CALIFORNIA

DESIGN ARCHITECTS

WM+P

WILLIAM McDONOUGH + PARTNERS
ARCHITECTURE AND COMMUNITY PLANNING

700 E. JEFFERSON ST.
CHARLOTTESVILLE, VA 22902
T 434.979.1111 F 434.979.1112
WWW.MCDONOUGHPARTNERS.COM

ARCHITECT OF RECORD

CONSULTANTS

STATUS
PLANNING APPLICATION

ISSUE

ISSUE

MARK	DATE	DESCRIPTION
	06/12/2020	100% PLANNING APPLICATION

PROJECT NO: 21811
DRAWN BY: JLA
CHECK BY:

SHEET TITLE / SHEET NUMBER

SITE PLAN

03

NOT FOR CONSTRUCTION

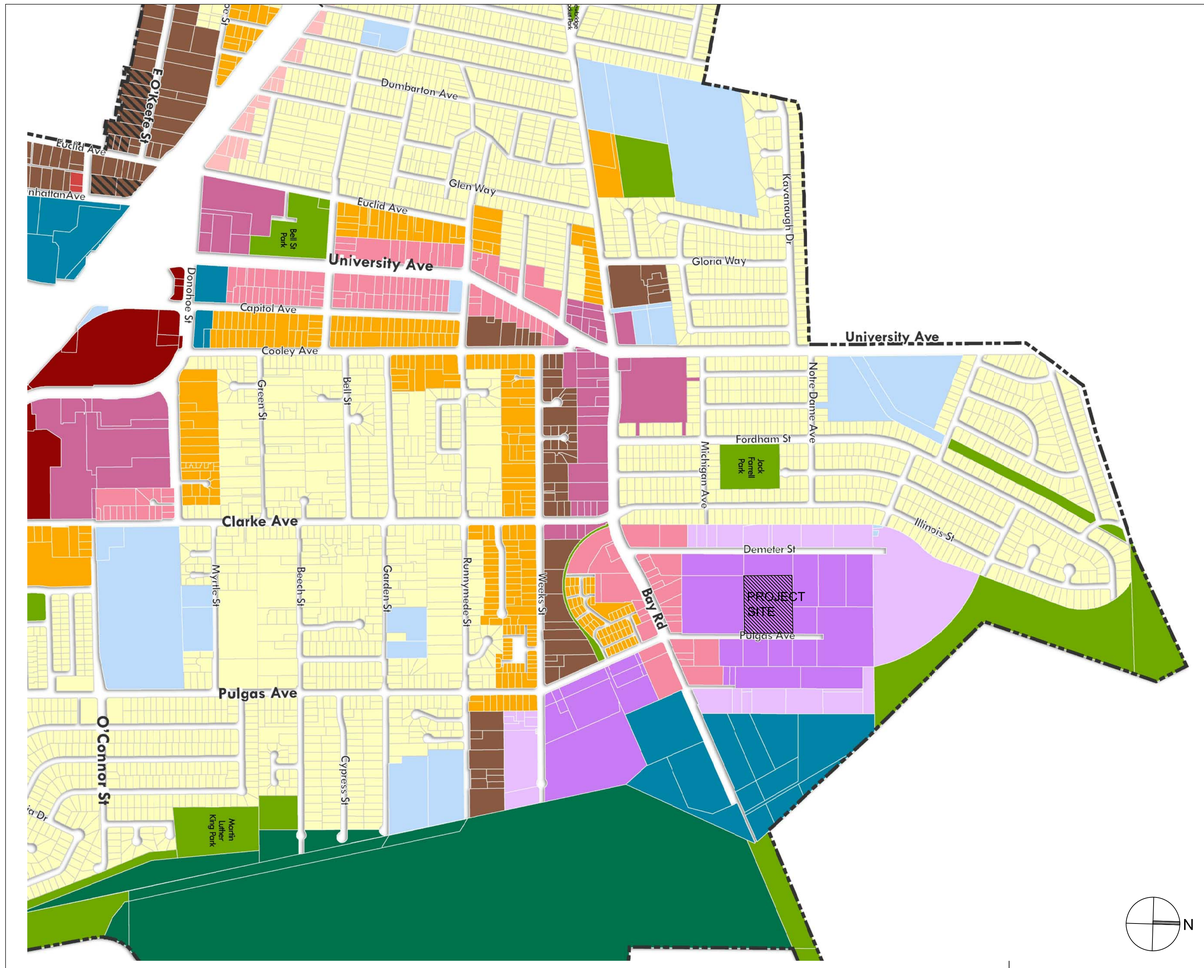

Low Density Residential
Medium Density Residential
High Density Residential
Urban Residential
Mixed Use Low
Mixed Use Corridor
Mixed Use High
General Commercial
Neighborhood Commercial
Office
General Industrial
Industrial Buffer
Resource Management
Parks/Recreation/Conservation
Public/Institutional

VISTA2035
EAST PALO ALTO GENERAL PLAN UPDATE

Source: 2000/2010 U.S. Census, San Mateo County GIS Enterprise Database and Santa Clara County, 2012.

1 EAST PALO ALTO GENERAL LAND USE DESIGNATION

N.T.S.

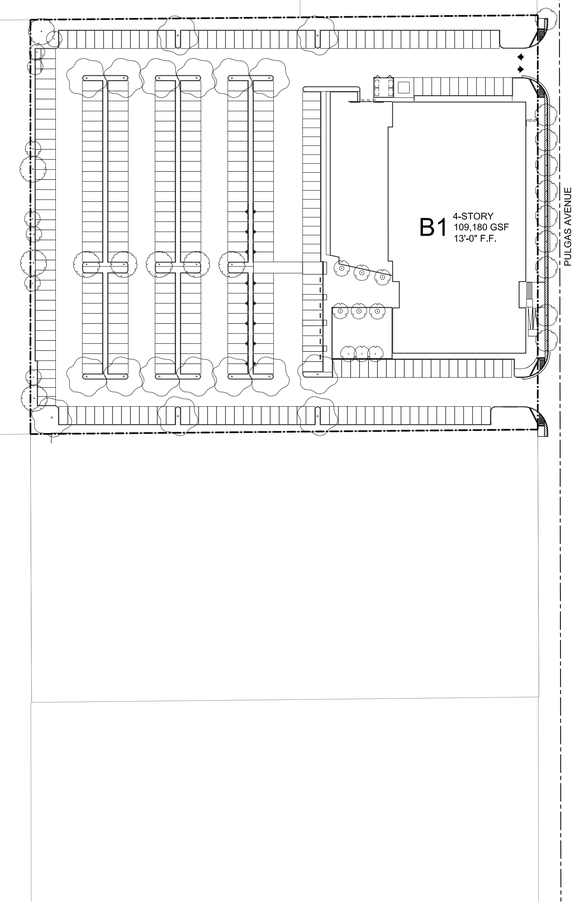

2 LAND USE PLAN

SCALE: $\frac{1}{64}$" = 1'-0"

0' 32' 64' 128'

N

BUILDING AREA CALCULATIONS

FLOOR LEVEL	GROSS FLOOR AREA (SF)	EXCLUSIONS FOR FAR PER PALO ALTO ZONING (EXTERIOR WALLS, STAIRS, SHAFTS, MECHANICAL)	FLOOR AREA (SF) (EPA ZONING)	EXCLUSIONS FOR PARKING SPACE CALCULATIONS PER PALO ALTO ZONING (EXTERIOR WALLS, STAIRS, SHAFTS, MECHANICAL + RESTROOMS)	GROSS AREA FOR PARKING CALCULATIONS (SF) (EPA ZONING)
GROUND LEVEL	27,491	1,580	25,911	2,268	25,223
LEVEL 2	27,240	1,318	25,922	2,006	25,234
LEVEL 3	27,240	1,318	25,922	2,006	25,234
LEVEL 4	27,209	1,318	25,891	2,006	25,203
TOTAL	**109,180**	**5,534**	**103,646**	**8,286**	**100,894**

3 BUILDING AREA AND PARCEL DATA

PROJECT

2535 PULGAS AVENUE
EAST PALO ALTO, CALIFORNIA

DESIGN ARCHITECTS

WM+P

WILLIAM McDONOUGH + PARTNERS
ARCHITECTURE AND COMMUNITY PLANNING

700 E. JEFFERSON ST.
CHARLOTTESVILLE, VA 22902
T 434.979.1111 F 434.979.1112
WWW.MCDONOUGHPARTNERS.COM

ARCHITECT OF RECORD

CONSULTANTS

STATUS
PLANNING APPLICATION

ISSUE

ISSUE

MARK	DATE	DESCRIPTION
	06/12/2020	100% PLANNING APPLICATION

PROJECT NO: 21811
DRAWN BY: JLA
CHECK BY:

SHEET TITLE / SHEET NUMBER

LAND USE PLAN

04

NOT FOR CONSTRUCTION

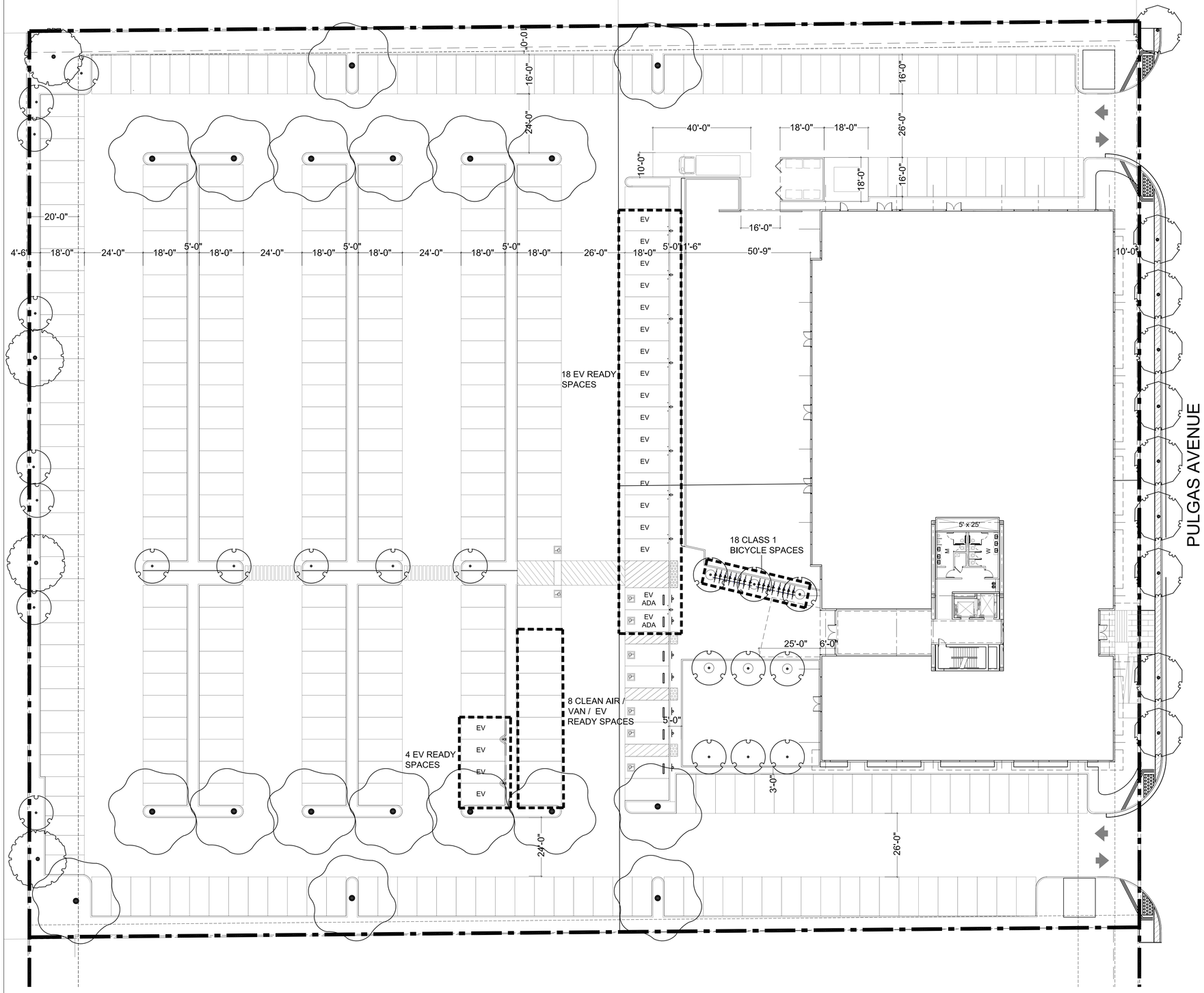

1 SITE PLAN - GROUND LEVEL

BICYCLE PARKING SUMMARY

Requirements based on Cal Green Mandatory Measures 2016

CLASS 1 REQUIREMENTS

5% of car parking required:	357 x 0.05 = 18 spaces
Provided:	18 spaces

CLEAN AIR / VANPOOL / EV

Requirements based on Cal Green Mandatory Measures 2016

EV READY SPACES

6% of car parking required:	357 x 0.06 = 22 spaces
Provided:	22 spaces

CLEAN AIR / VANPOOL / EV

Additional 2% of car parking required:	357 x 0.02 = 7 spaces
Provided:	8 spaces

0' 10' 20' 40'

N

PROJECT

2535 PULGAS AVENUE

EAST PALO ALTO, CALIFORNIA

DESIGN ARCHITECTS

WM+P

WILLIAM McDONOUGH + PARTNERS
ARCHITECTURE AND COMMUNITY PLANNING

700 E. JEFFERSON ST.
CHARLOTTESVILLE, VA 22902
T 434.979.1111 F 434.979.1112
WWW.MCDONOUGHPARTNERS.COM

ARCHITECT OF RECORD

CONSULTANTS

STATUS

PLANNING APPLICATION

ISSUE

ISSUE

MARK	DATE	DESCRIPTION
	06/12/2020	100% PLANNING APPLICATION

PROJECT NO: 21811

DRAWN BY: JLA

CHECK BY:

SHEET TITLE / SHEET NUMBER

BIKE / CLEAN AIR / VANPOOL / EV PARKING PLAN

05

NOT FOR CONSTRUCTION

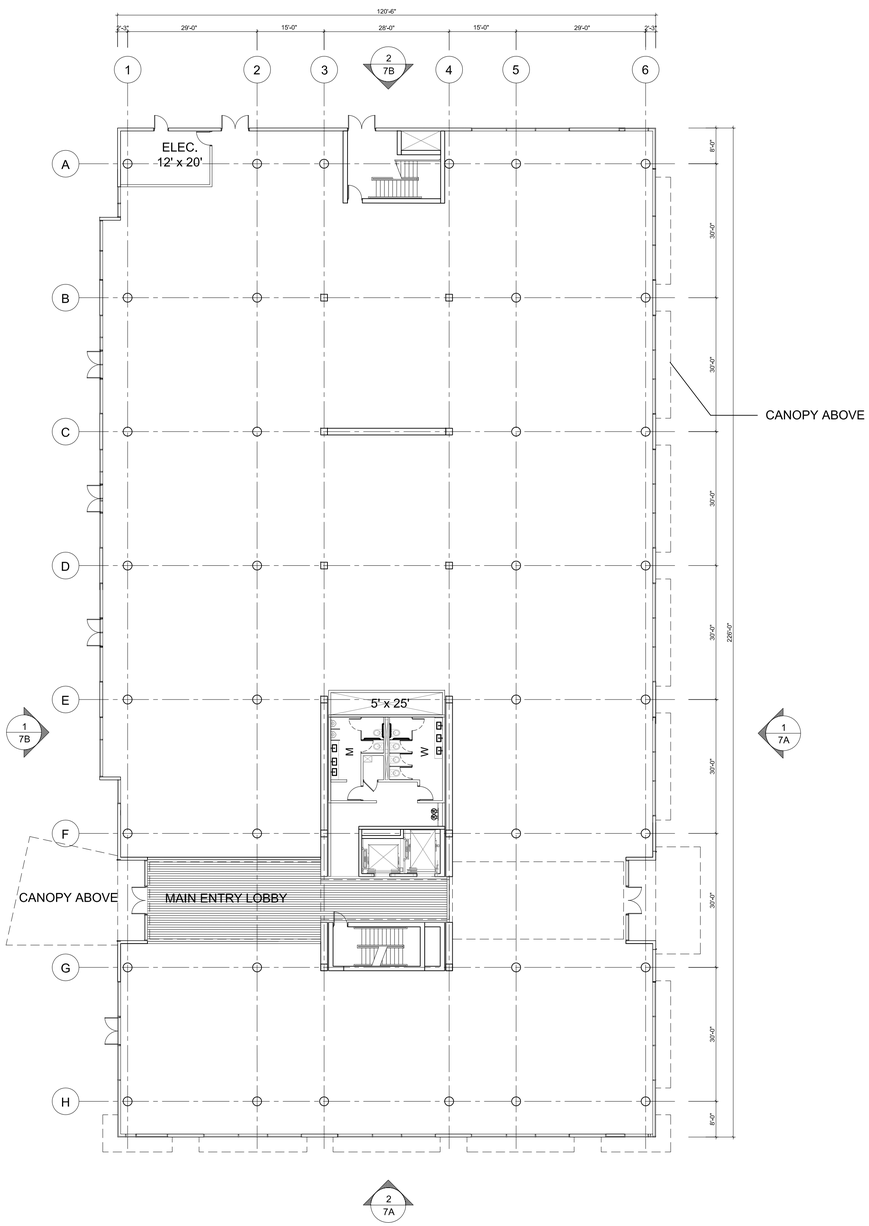

1 PLAN - GROUND LEVEL

SCALE: 1/16" = 1'-0"

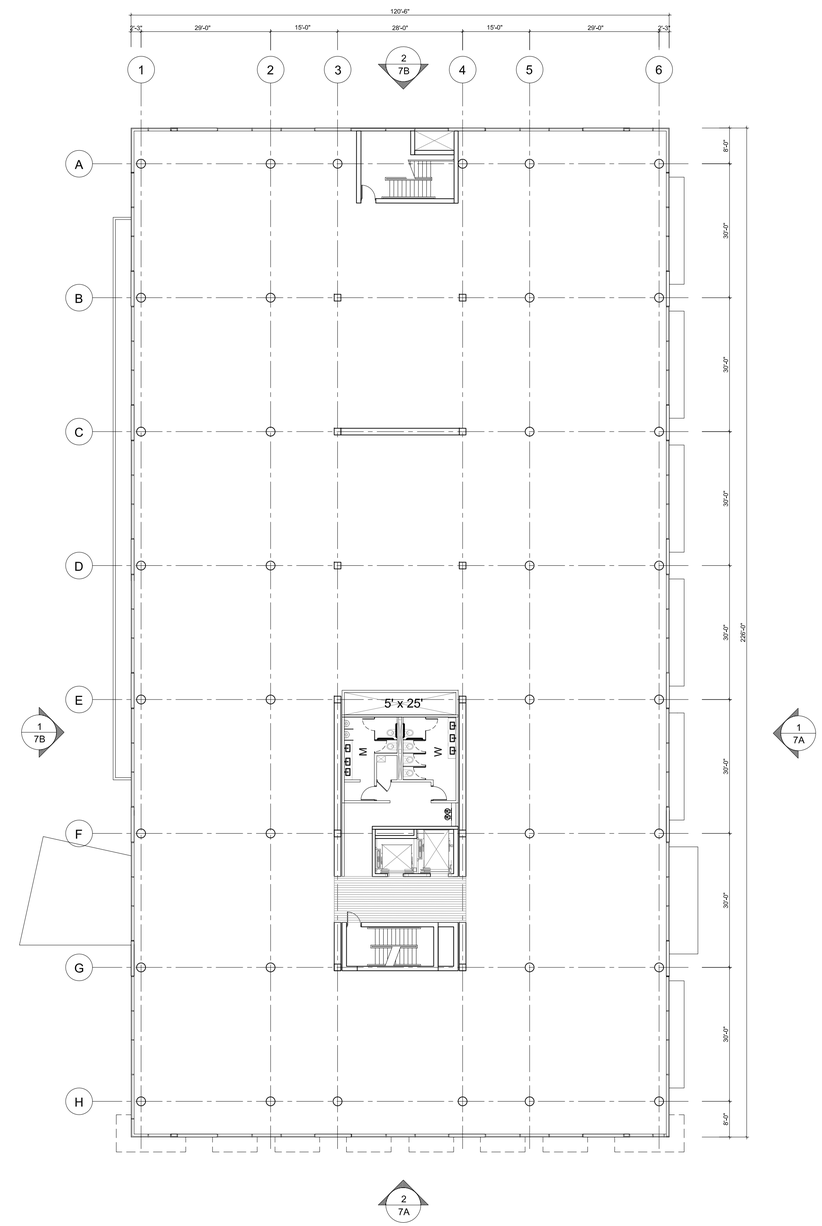

2 PLAN - LEVEL 2-3

SCALE: 1/16" = 1'-0"

0' 8' 16' 32'

N

PROJECT

2535 PULGAS AVENUE

EAST PALO ALTO, CALIFORNIA

DESIGN ARCHITECTS

WM+P

WILLIAM McDONOUGH + PARTNERS
ARCHITECTURE AND COMMUNITY PLANNING

700 E. JEFFERSON ST.
CHARLOTTESVILLE, VA 22902
T 434.979.1111 F 434.979.1112
WWW.MCDONOUGHPARTNERS.COM

ARCHITECT OF RECORD

CONSULTANTS

STATUS

PLANNING APPLICATION

ISSUE

ISSUE

MARK	DATE	DESCRIPTION
	06/12/2020	100% PLANNING APPLICATION

PROJECT NO:	21811
DRAWN BY:	JLA
CHECK BY:	

SHEET TITLE / SHEET NUMBER

FLOOR PLANS

06A

NOT FOR CONSTRUCTION

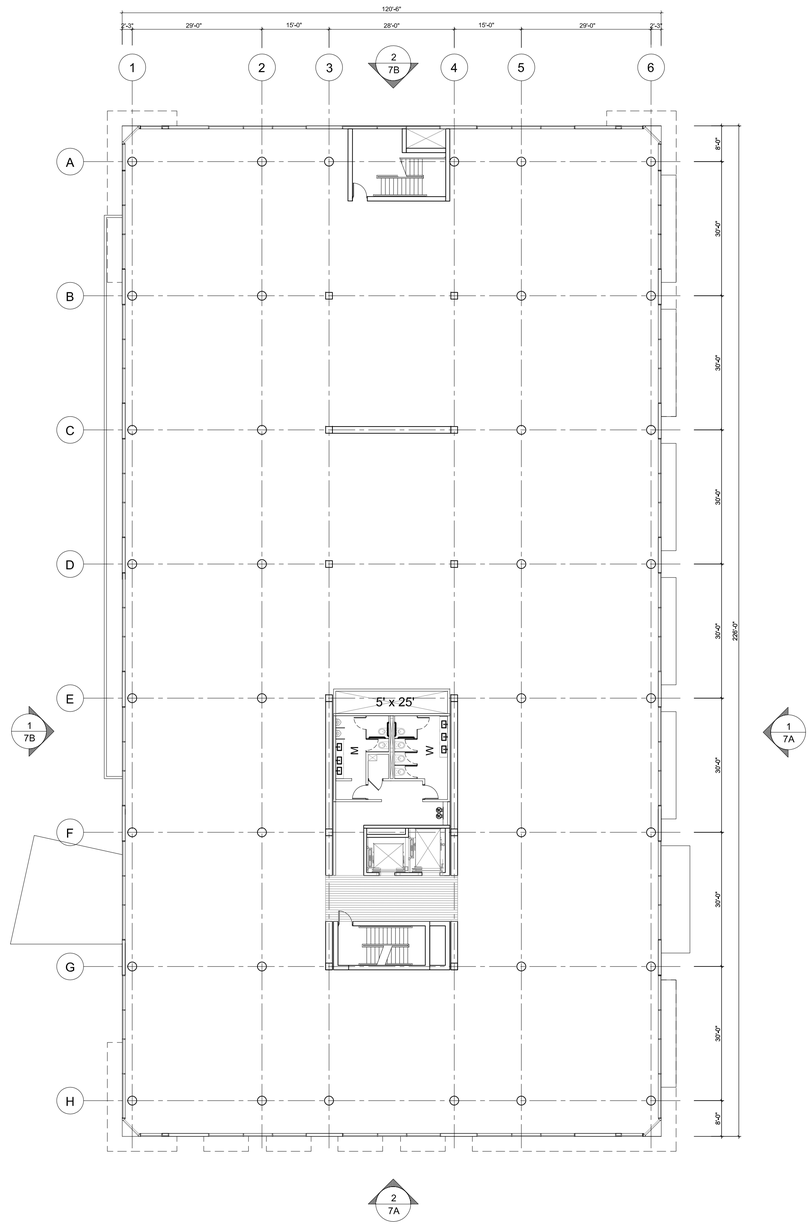

1 PLAN - LEVEL 4

SCALE: 1/16" = 1'-0"

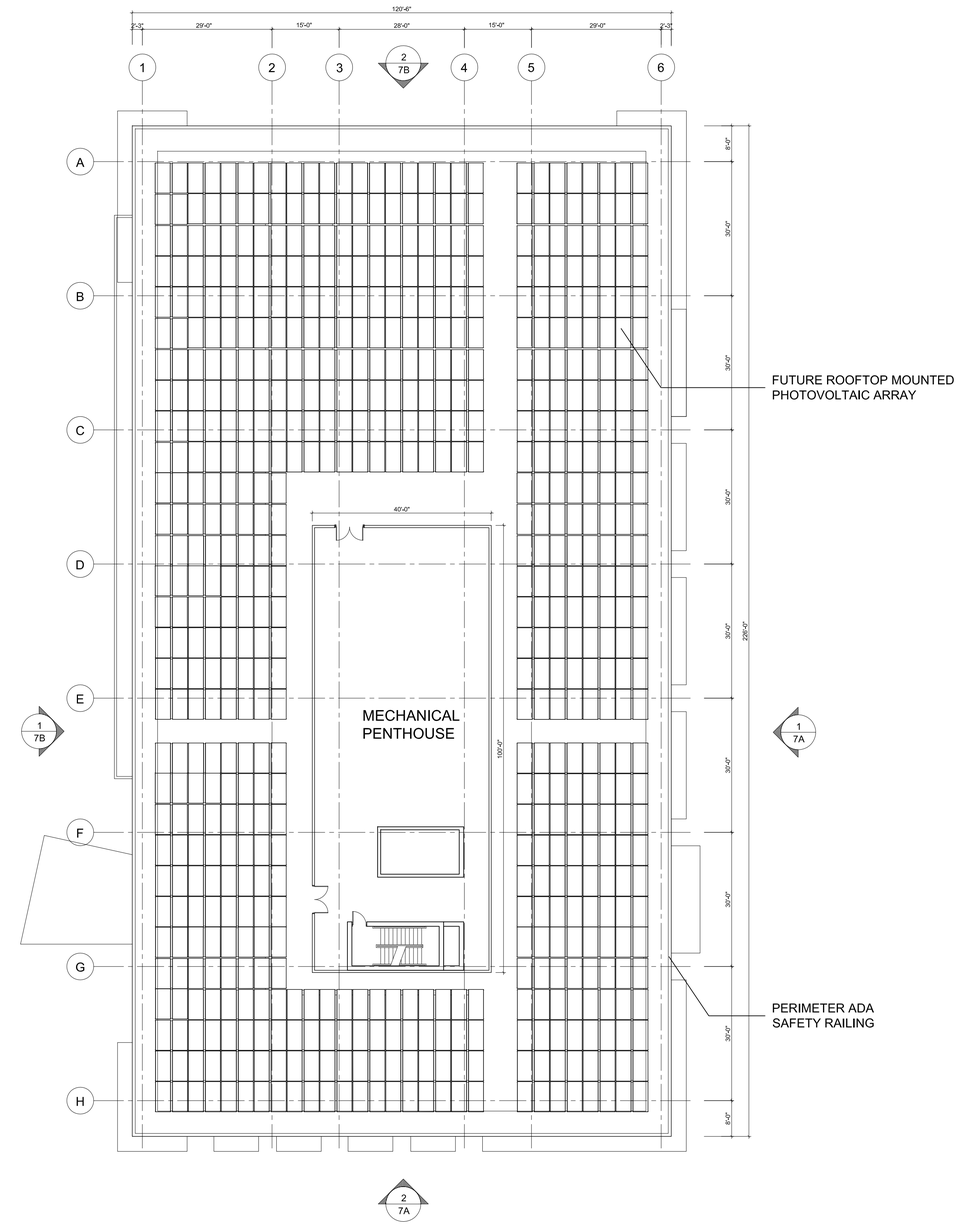

2 PLAN - ROOF LEVEL

SCALE: 1/16" = 1'-0"

0' 8' 16' 32'

N

PROJECT

2535 PULGAS AVENUE

EAST PALO ALTO, CALIFORNIA

DESIGN ARCHITECTS

WM+P

WILLIAM McDONOUGH + PARTNERS

ARCHITECTURE AND COMMUNITY PLANNING

700 E. JEFFERSON ST.
CHARLOTTESVILLE, VA 22902
T 434.979.1111 F 434.979.1112
WWW.MCDONOUGHPARTNERS.COM

ARCHITECT OF RECORD

CONSULTANTS

STATUS

PLANNING APPLICATION

ISSUE

ISSUE

MARK	DATE	DESCRIPTION
	06/12/2020	100% PLANNING APPLICATION

PROJECT NO: 21811

DRAWN BY: JLA

CHECK BY:

SHEET TITLE / SHEET NUMBER

FLOOR PLANS

06B

NOT FOR CONSTRUCTION

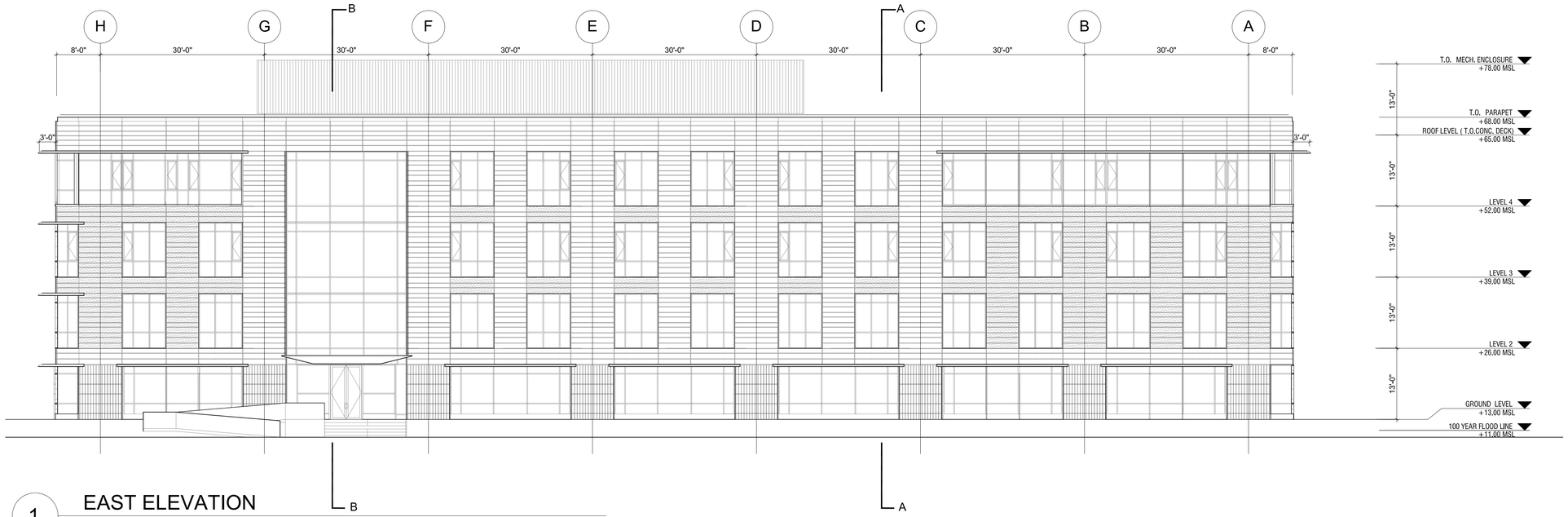

1 EAST ELEVATION

SCALE: 3/32" = 1'-0"

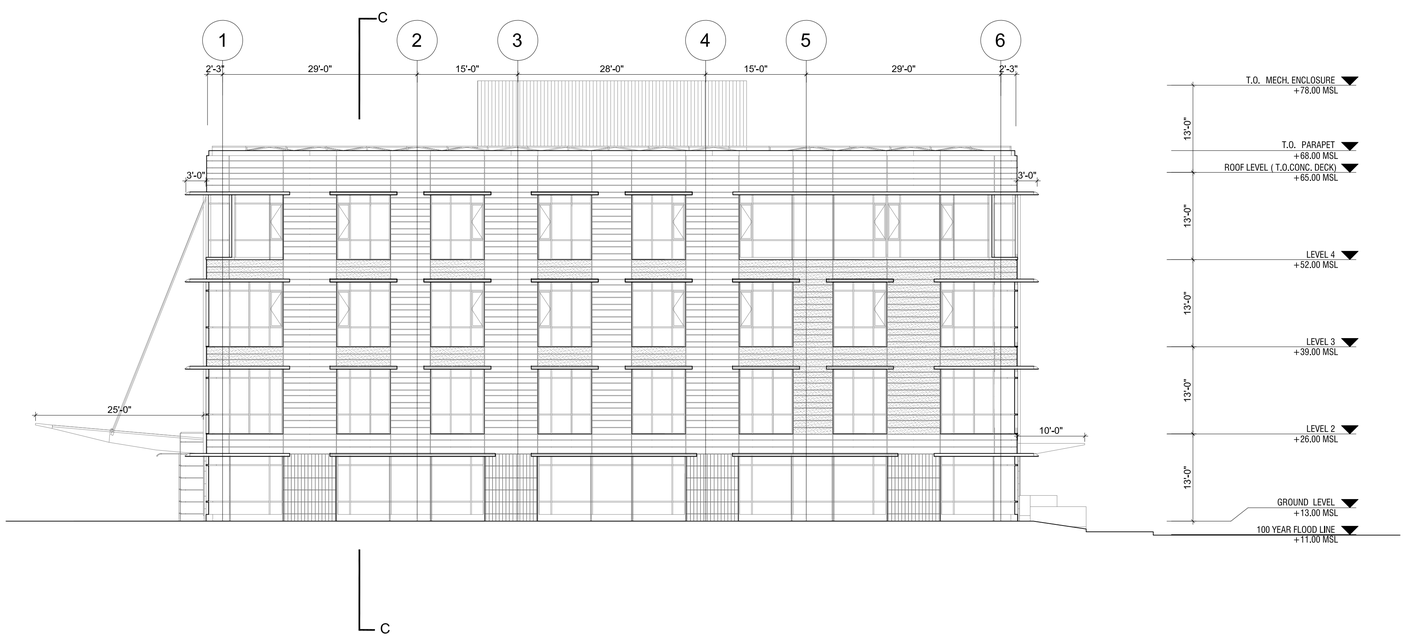

2 SOUTH ELEVATION

SCALE: 3/32" = 1'-0"

PROJECT

2535 PULGAS AVENUE

EAST PALO ALTO, CALIFORNIA

DESIGN ARCHITECTS

WM+P

WILLIAM McDONOUGH + PARTNERS
ARCHITECTURE AND COMMUNITY PLANNING

700 E. JEFFERSON ST.
CHARLOTTESVILLE, VA 22902
T 434.979.1111 F 434.979.1112
WWW.MCDONOUGHPARTNERS.COM

ARCHITECT OF RECORD

CONSULTANTS

STATUS

PLANNING APPLICATION

ISSUE

ISSUE

MARK	DATE	DESCRIPTION
	06/12/2020	100% PLANNING APPLICATION

PROJECT NO: 21811

DRAWN BY: JLA

CHECK BY:

SHEET TITLE / SHEET NUMBER

BUILDING ELEVATIONS

07A

NOT FOR CONSTRUCTION

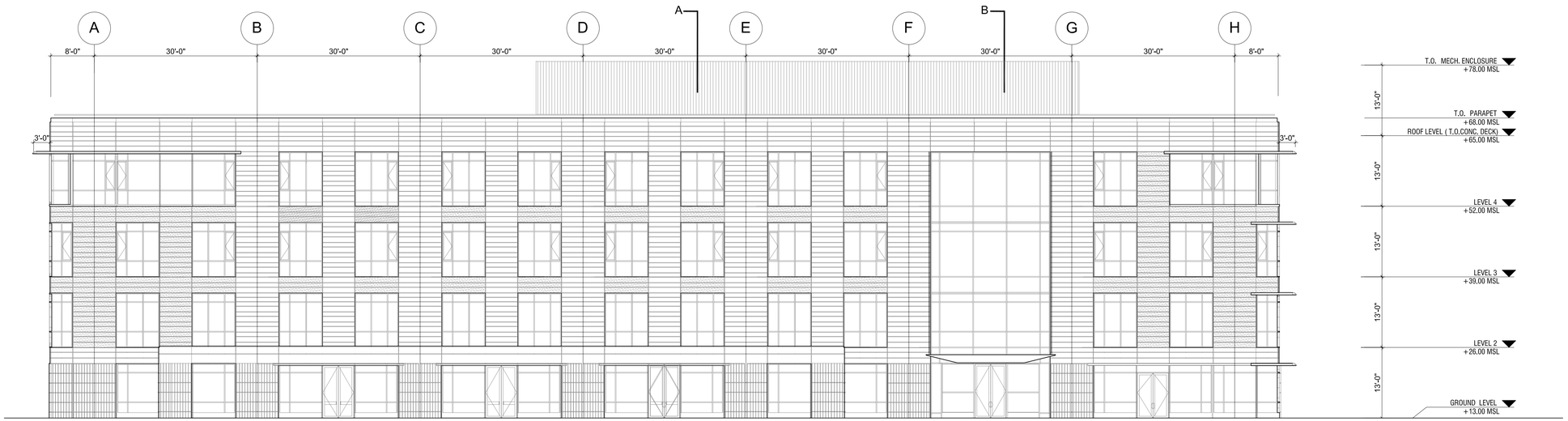

1 WEST ELEVATION

SCALE: 3/32" = 1'-0"

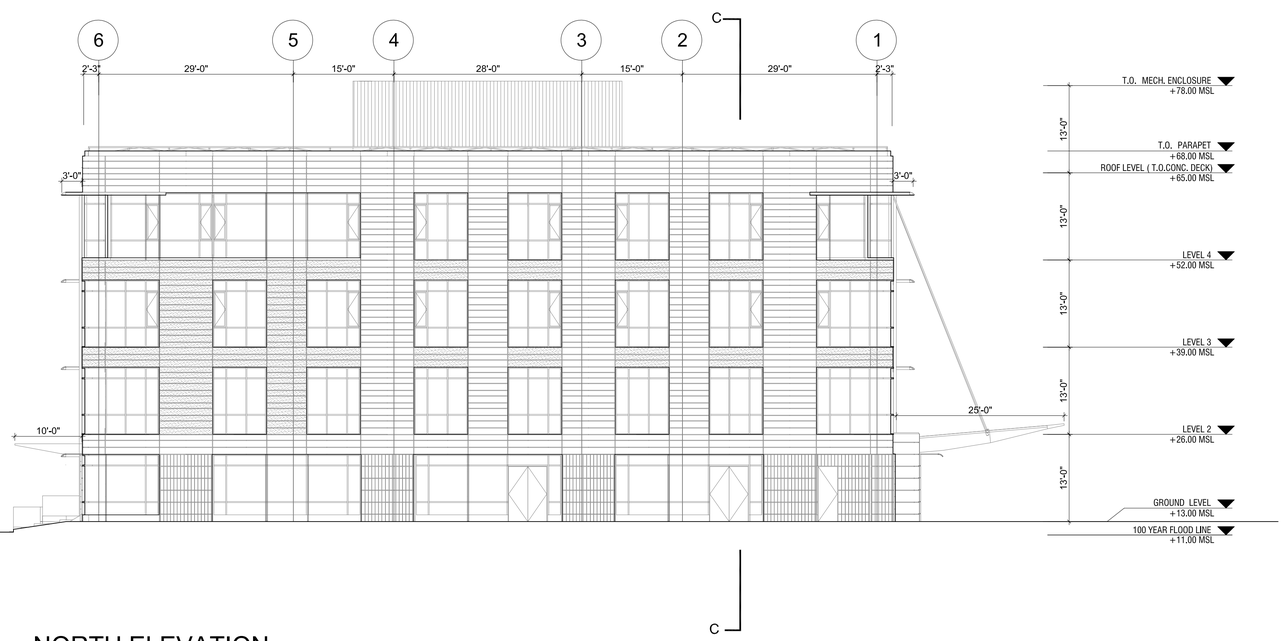

2 NORTH ELEVATION

SCALE: 3/32" = 1'-0"

PROJECT

2535 PULGAS AVENUE

EAST PALO ALTO, CALIFORNIA

DESIGN ARCHITECTS

WM+P

WILLIAM McDONOUGH + PARTNERS
ARCHITECTURE AND COMMUNITY PLANNING

700 E. JEFFERSON ST.
CHARLOTTESVILLE, VA 22902
T 434.979.1111 F 434.979.1112
WWW.MCDONOUGHPARTNERS.COM

ARCHITECT OF RECORD

CONSULTANTS

STATUS

PLANNING APPLICATION

ISSUE

ISSUE

MARK	DATE	DESCRIPTION
	06/12/2020	100% PLANNING APPLICATION

PROJECT NO: 21811

DRAWN BY: JLA

CHECK BY:

SHEET TITLE / SHEET NUMBER

BUILDING ELEVATIONS

07B

NOT FOR CONSTRUCTION

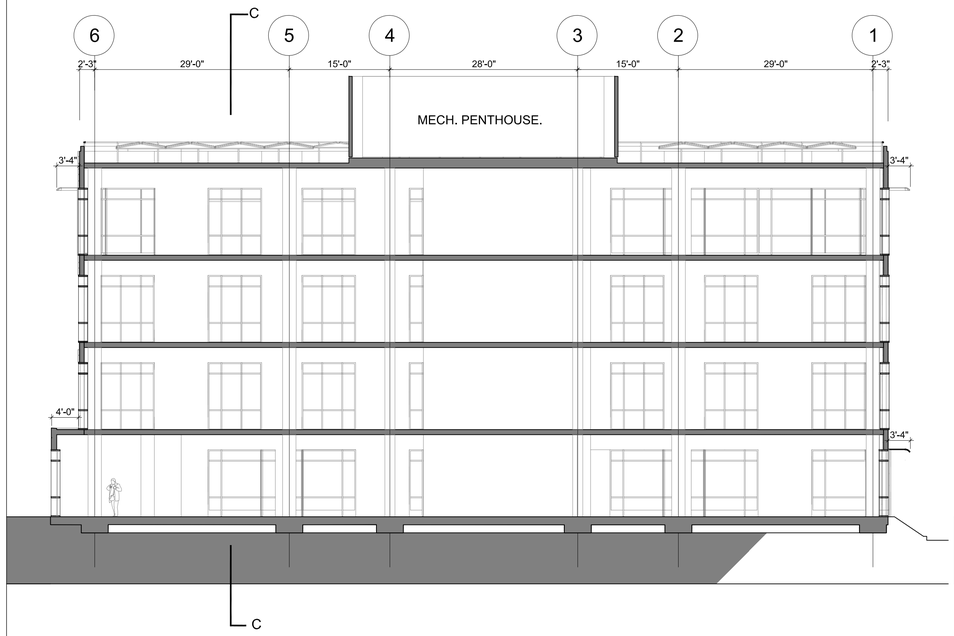

1 SECTION A-A

SCALE: 3/32" = 1'-0"

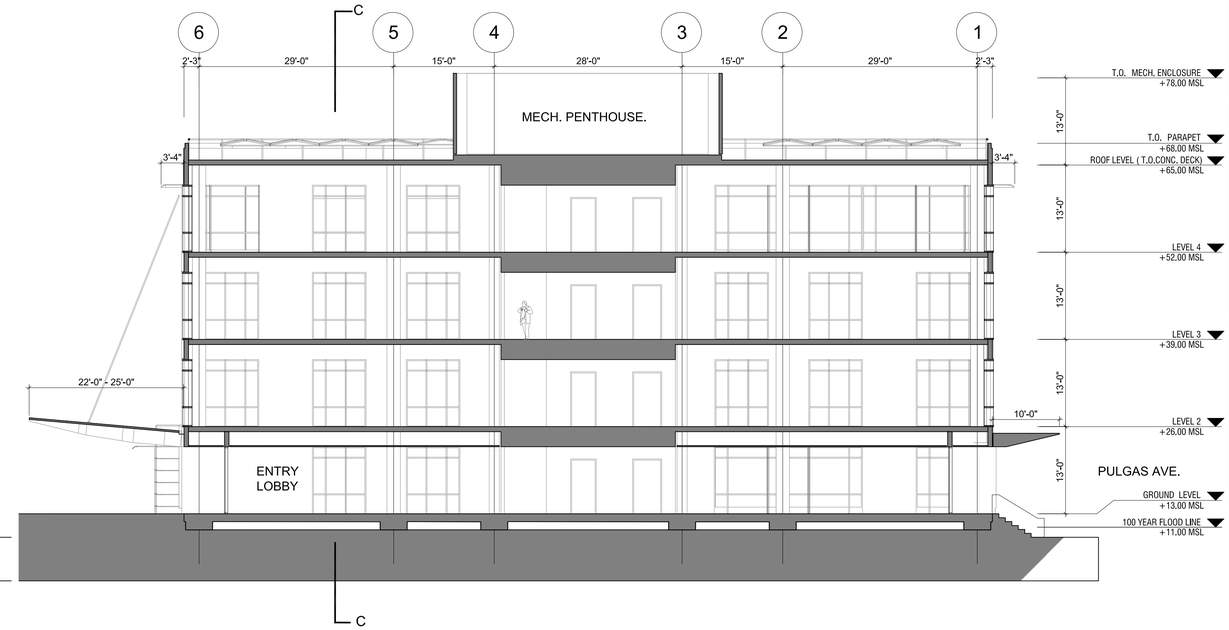

2 SECTION B-B

SCALE: 3/32" = 1'-0"

3 SECTION C-C

SCALE: 3/32" = 1'-0"

PROJECT

2535 PULGAS AVENUE

EAST PALO ALTO, CALIFORNIA

DESIGN ARCHITECTS

WM+P

WILLIAM McDONOUGH + PARTNERS

ARCHITECTURE AND COMMUNITY PLANNING

700 E. JEFFERSON ST.
CHARLOTTESVILLE, VA 22902
T 434.979.1111 F 434.979.1112
WWW.MCDONOUGHPARTNERS.COM

ARCHITECT OF RECORD

CONSULTANTS

STATUS

PLANNING APPLICATION

ISSUE

ISSUE

MARK	DATE	DESCRIPTION
	06/12/2020	100% PLANNING APPLICATION

PROJECT NO: 21811

DRAWN BY: JLA

CHECK BY:

SHEET TITLE / SHEET NUMBER

BUILDING SECTIONS

08

NOT FOR CONSTRUCTION

1 BUILDING SECTION PERSPECTIVE

NOT TO SCALE

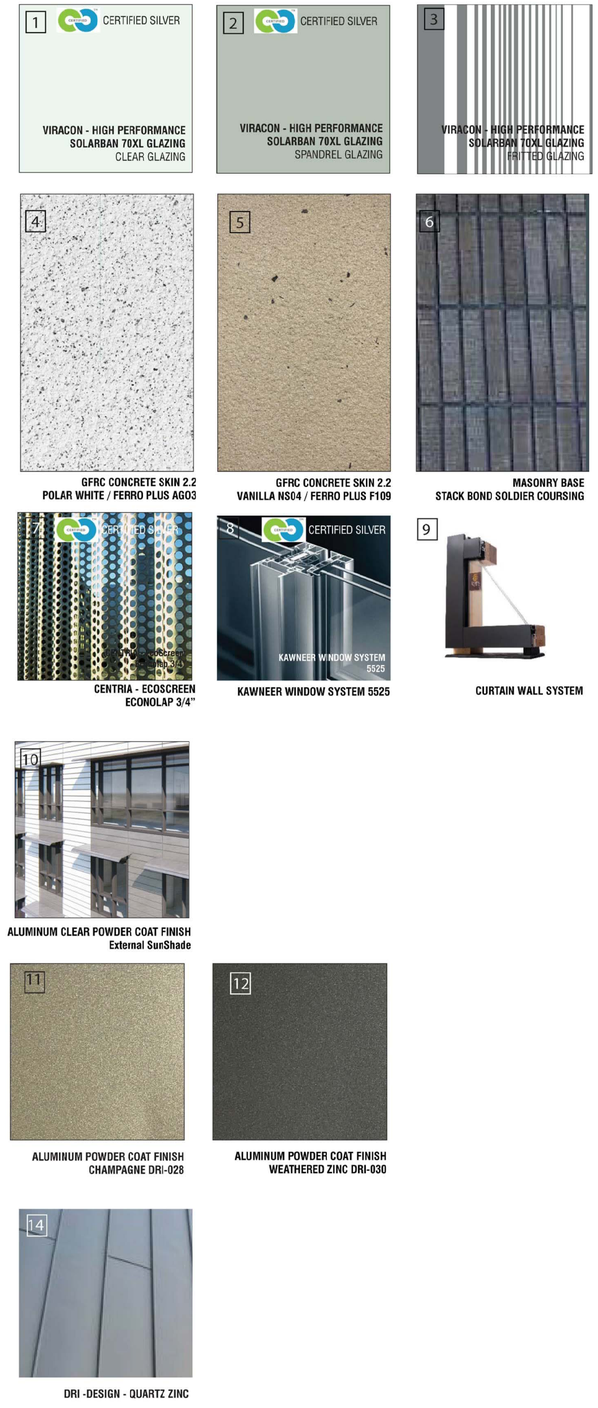

2 EXTERIOR BUILDING MATERIALS + PRODUCTS

PROJECT

2535 PULGAS AVENUE

EAST PALO ALTO, CALIFORNIA

DESIGN ARCHITECTS

WM+P

WILLIAM McDONOUGH + PARTNERS
ARCHITECTURE AND COMMUNITY PLANNING

700 E. JEFFERSON ST.
CHARLOTTESVILLE, VA 22902
T 434.979.1111 F 434.979.1112
WWW.MCDONOUGHPARTNERS.COM

ARCHITECT OF RECORD

CONSULTANTS

STATUS

PLANNING APPLICATION

ISSUE

ISSUE

MARK	DATE	DESCRIPTION
	06/12/2020	100% PLANNING APPLICATION

PROJECT NO: 21811

DRAWN BY: JLA

CHECK BY:

SHEET TITLE / SHEET NUMBER

BUILDING MATERIALS

09A

NOT FOR CONSTRUCTION

1 BUILDING PERSPECTIVE

NOT TO SCALE

VIRACON - HIGH PERFORMANCE
SOLARBAN 70XL GLAZING
CLEAR GLAZING

VIRACON - HIGH PERFORMANCE
SOLARBAN 70XL GLAZING
SPANDREL GLAZING

VIRACON - HIGH PERFORMANCE
SOLARBAN 70XL GLAZING
FRITTED GLAZING

GFRC CONCRETE SKIN 2.2
POLAR WHITE / FERRO PLUS AG03

GFRC CONCRETE SKIN 2.2
VANILLA NS04 / FERRO PLUS F109

MASONRY BASE
STACK BOND SOLDIER COURSING

CENTRIA - ECOSCREEN
ECONOLAP 3/4"

KAWNEER WINDOW SYSTEM 5525

CURTAIN WALL SYSTEM

ALUMINUM CLEAR POWDER COAT FINISH
External SunShade

ALUMINUM POWDER COAT FINISH
CHAMPAGNE DRI-028

ALUMINUM POWDER COAT FINISH
WEATHERED ZINC DRI-030

DRI -DESIGN - QUARTZ ZINC

2 EXTERIOR BUILDING MATERIALS + PRODUCTS

PROJECT

2535 PULGAS AVENUE
EAST PALO ALTO, CALIFORNIA

DESIGN ARCHITECTS

WM+P

WILLIAM McDONOUGH + PARTNERS
ARCHITECTURE AND COMMUNITY PLANNING

700 E. JEFFERSON ST.
CHARLOTTESVILLE, VA 22902
T 434.979.1111 F 434.979.1112
WWW.MCDONOUGHPARTNERS.COM

ARCHITECT OF RECORD

CONSULTANTS

STATUS
PLANNING APPLICATION

ISSUE

ISSUE

MARK	DATE	DESCRIPTION
	06/12/2020	100% PLANNING APPLICATION

PROJECT NO: 21811
DRAWN BY: JLA
CHECK BY:

SHEET TITLE / SHEET NUMBER

BUILDING MATERIALS

09B

NOT FOR CONSTRUCTION

1 AERIAL VIEW - LOOKING NORTH

2 PULGAS AVENUE VIEW - LOOKING NORTHWEST

3 PULGAS AVENUE VIEW - LOOKING SOUTHEAST

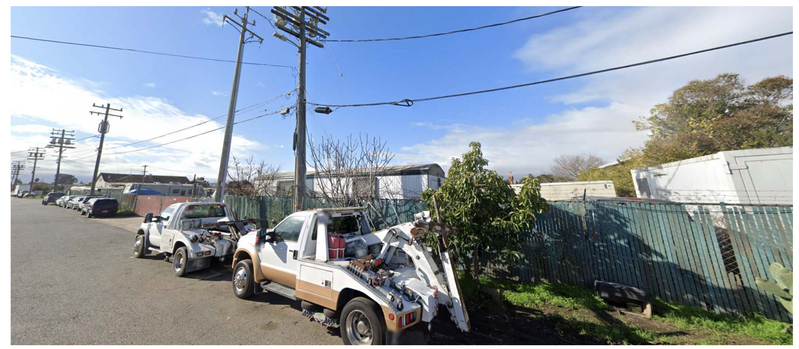

4 PULGAS AVENUE VIEW - LOOKING SOUTHEAST

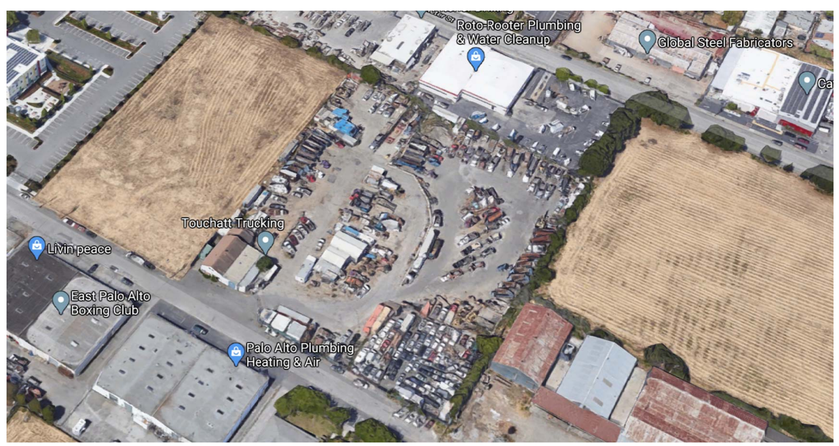

5 AERIAL VIEW

PROJECT

2535 PULGAS AVENUE
EAST PALO ALTO, CALIFORNIA

DESIGN ARCHITECTS

WM+P

WILLIAM McDONOUGH + PARTNERS
ARCHITECTURE AND COMMUNITY PLANNING

700 E. JEFFERSON ST.
CHARLOTTESVILLE, VA 22902
T 434.979.1111 F 434.979.1112
WWW.MCDONOUGHPARTNERS.COM

ARCHITECT OF RECORD

CONSULTANTS

STATUS
PLANNING APPLICATION

ISSUE

ISSUE

MARK	DATE	DESCRIPTION
	06/12/2020	100% PLANNING APPLICATION

PROJECT NO: 21811
DRAWN BY: JLA
CHECK BY:

SHEET TITLE / SHEET NUMBER

EXISTING
SITE PHOTOS

10

NOT FOR CONSTRUCTION

1 VIEW 1 - PULGAS STREET VIEW

2 VIEW 2 - WALL DETAIL VIEW - SOUTHWEST CORNER

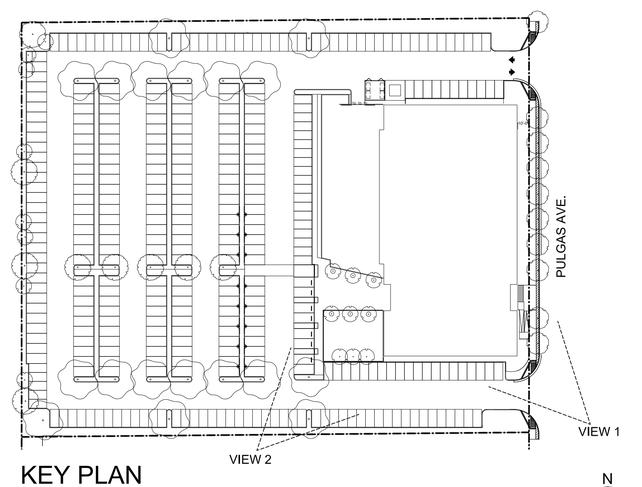

KEY PLAN

PROJECT

2535 PULGAS AVENUE
EAST PALO ALTO, CALIFORNIA

DESIGN ARCHITECTS

WM+P

WILLIAM McDONOUGH + PARTNERS
ARCHITECTURE AND COMMUNITY PLANNING

700 E. JEFFERSON ST.
CHARLOTTESVILLE, VA 22902
T 434.979.1111 F 434.979.1112
WWW.MCDONOUGHPARTNERS.COM

ARCHITECT OF RECORD

CONSULTANTS

STATUS
PLANNING APPLICATION

ISSUE

ISSUE

MARK	DATE	DESCRIPTION
	06/12/2020	100% PLANNING APPLICATION

PROJECT NO: 21811
DRAWN BY: JLA
CHECK BY:

SHEET TITLE / SHEET NUMBER

RENDERINGS

11A

NOT FOR CONSTRUCTION

SEVEN FOOT (7'-0") HIGH FENCE: METAL FRAME W/ HORIZONTAL WOOD SLATS

TEN FOOT (10'-0") HIGH FENCE: MASONRY FENCE TO 7'-0" + METAL FRAME W/ HORIZONTAL WOOD SLATS

1 VIEW 3 - WEST ENTRY FROM PARKING

2 VIEW 4 - AERIAL VIEW AT WEST ENTRY AND COURTYARD

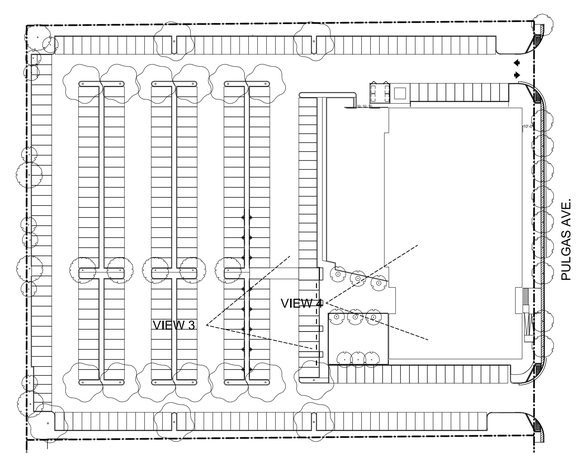

KEY PLAN

N

PROJECT

2535 PULGAS AVENUE
EAST PALO ALTO, CALIFORNIA

DESIGN ARCHITECTS

WM+P

WILLIAM McDONOUGH + PARTNERS
ARCHITECTURE AND COMMUNITY PLANNING

700 E. JEFFERSON ST.
CHARLOTTESVILLE, VA 22902
T 434.979.1111 F 434.979.1112
WWW.MCDONOUGHPARTNERS.COM

ARCHITECT OF RECORD

CONSULTANTS

STATUS
PLANNING APPLICATION

ISSUE

ISSUE

MARK	DATE	DESCRIPTION
	06/12/2020	100% PLANNING APPLICATION

PROJECT NO: 21811
DRAWN BY: JLA
CHECK BY:

SHEET TITLE / SHEET NUMBER

RENDERINGS

11B

NOT FOR CONSTRUCTION

1 VIEW 5 - TOWARDS NORTHWEST CORNER

2 VIEW 6 - VIEW TOWARDS NORTHEAST CORNER

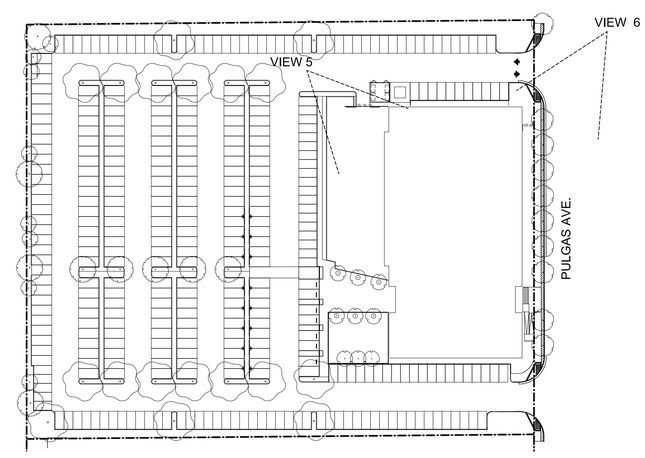

KEY PLAN

PROJECT

2535 PULGAS AVENUE
EAST PALO ALTO, CALIFORNIA

DESIGN ARCHITECTS

WM+P

WILLIAM McDONOUGH + PARTNERS
ARCHITECTURE AND COMMUNITY PLANNING

700 E. JEFFERSON ST.
CHARLOTTESVILLE, VA 22902
T 434.979.1111 F 434.979.1112
WWW.MCDONOUGHPARTNERS.COM

ARCHITECT OF RECORD

CONSULTANTS

STATUS
PLANNING APPLICATION

ISSUE

ISSUE

MARK	DATE	DESCRIPTION
	06/12/2020	100% PLANNING APPLICATION

PROJECT NO:	21811
DRAWN BY:	JLA
CHECK BY:	

SHEET TITLE / SHEET NUMBER

RENDERINGS

11C

NOT FOR CONSTRUCTION

1 VIEW 7 - AERIAL VIEW FROM SOUTHWEST

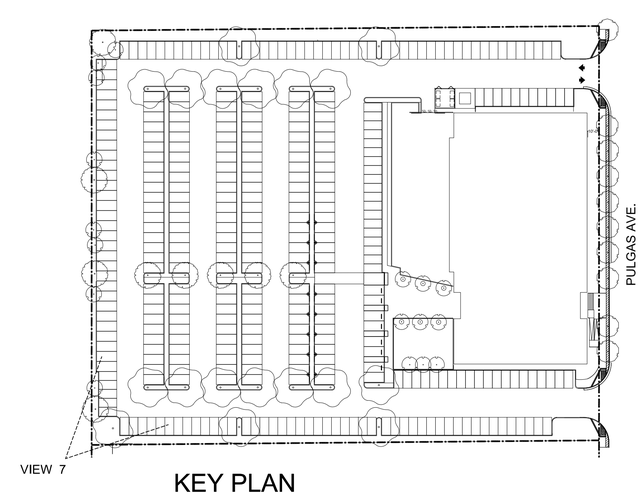

KEY PLAN

N

PROJECT

2535 PULGAS AVENUE
EAST PALO ALTO, CALIFORNIA

DESIGN ARCHITECTS

WM+P

WILLIAM McDONOUGH + PARTNERS
ARCHITECTURE AND COMMUNITY PLANNING

700 E. JEFFERSON ST.
CHARLOTTESVILLE, VA 22902
T 434.979.1111 F 434.979.1112
WWW.MCDONOUGHPARTNERS.COM

ARCHITECT OF RECORD

CONSULTANTS

STATUS
PLANNING APPLICATION

ISSUE

ISSUE

MARK	DATE	DESCRIPTION
	06/12/2020	100% PLANNING APPLICATION

PROJECT NO: 21811
DRAWN BY: JLA
CHECK BY:

SHEET TITLE / SHEET NUMBER

RENDERINGS

11D

NOT FOR CONSTRUCTION

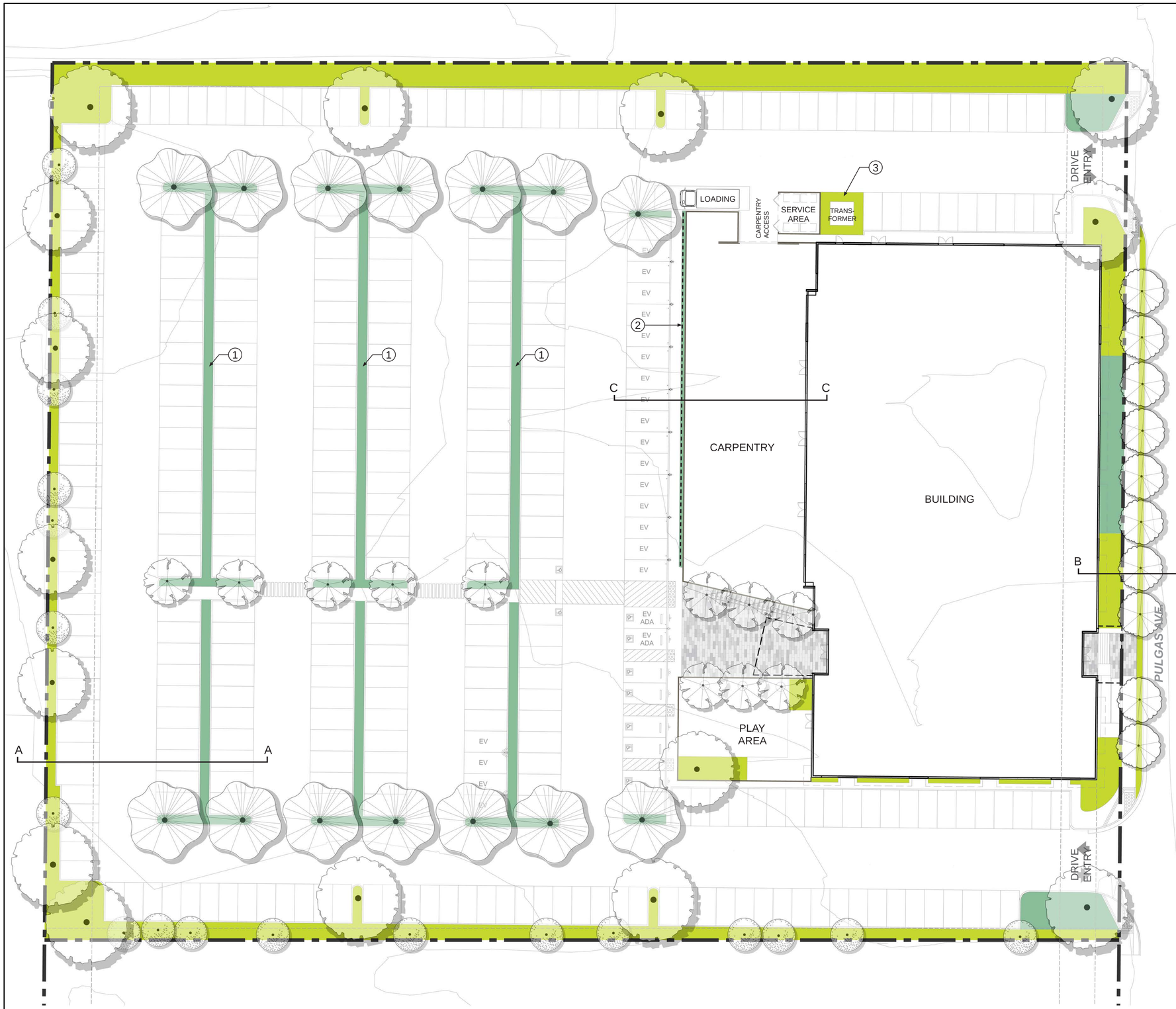

1 PLANTING AREAS

PLANTING AREA PLANT COMMUNITIES

RIPARIAN / MARSH TRANSITION (6,398 SF)

UPLAND MOSAIC (13,182 SF)

TOTAL PLANTING AREA: 19,580 SF (11% OF SITE)
80% Low/VL Water Use, 20% Moderate Water Use*
Refer to Plant Palette on L4

*WATER USE AS NOTED IN 'WATER USE CLASSIFICATION OF LANDSCAPE SPECIES' 2013

GENERAL NOTES

1. REFER TO L4 FOR DETAILED PLANT PALETTE AND IMAGERY
2. REFER TO L7 FOR PLANTING DETAILS
3. AN IRRIGATION SYSTEM PROVIDING 100% COVERAGE IN ACCORDANCE WITH EAST PALO ALTO AND CALIFORNIA MODEL EFFICIENT LANDSCAPE ORDINANCE WILL BE PROVIDED

KEY NOTES

1. BIOFILTRATION PLANTING, REFER TO RIPARIAN / MARSH TRANSITION PLANT PALETTE
2. GREEN SCREEN, REFER TO SHEET L2
3. PLANTING TO SCREEN UTILITIES

0' 10' 20' 40'

N

PROJECT

2535 PULGAS AVENUE
EAST PALO ALTO, CALIFORNIA

DESIGN ARCHITECTS

WM+P

WILLIAM McDONOUGH + PARTNERS
ARCHITECTURE AND COMMUNITY PLANNING
700 E. JEFFERSON ST.
CHARLOTTESVILLE, VA 22902
T 434.979.1111 F 434.979.1112
WWW.MCDONOUGHPARTNERS.COM

ARCHITECT OF RECORD

CONSULTANTS

RANA LANDSCAPE ARCHITECTURE
www.ranacohabitat.com
27875 BERWICK DRIVE, SUITE A, CARMEL, CA
phone (831) 659.3820 fax (831) 646.2106

STATUS

PLANNING APPLICATION

ISSUE

MARK	DATE	DESCRIPTION
	06/12/2020	100% PLANNING APPLICATION

PROJECT NO: xx

DRAWN BY: AA

CHECK BY: MY

PLANNING SUBMITTAL
2020

SHEET TITLE / SHEET NUMBER

LANDSCAPE PLAN

L1

NOT FOR CONSTRUCTION

PLANTING AREA PLANT COMMUNITIES

- RIPARIAN / MARSH TRANSITION
- UPLAND MOSAIC

GENERAL NOTES

1. REFER TO L4 FOR DETAILED PLANT PALETTE AND IMAGERY
2. REFER TO L7 FOR PLANTING DETAILS
3. AN IRRIGATION SYSTEM PROVIDING 100% COVERAGE IN ACCORDANCE WITH EAST PALO ALTO AND CALIFORNIA MODEL EFFICIENT LANDSCAPE ORDINANCE WILL BE PROVIDED

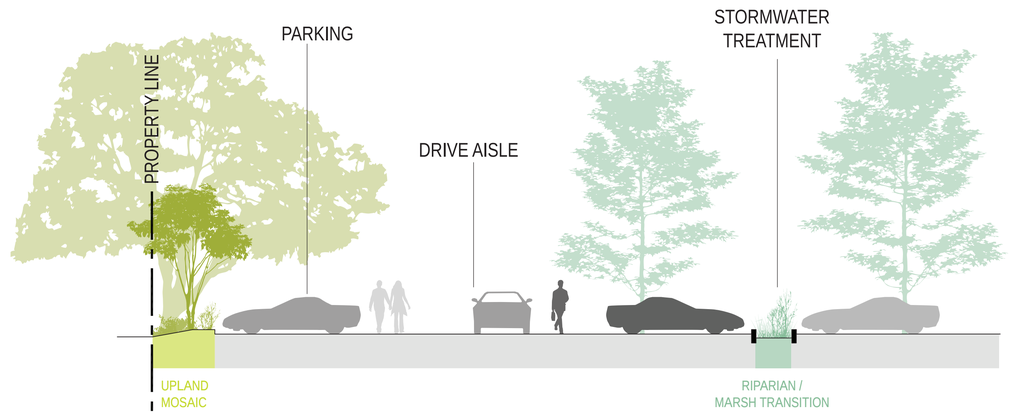

ELEVATION A: PARKING & WEST BOUNDARY

SCALE: 1"=8'-0"

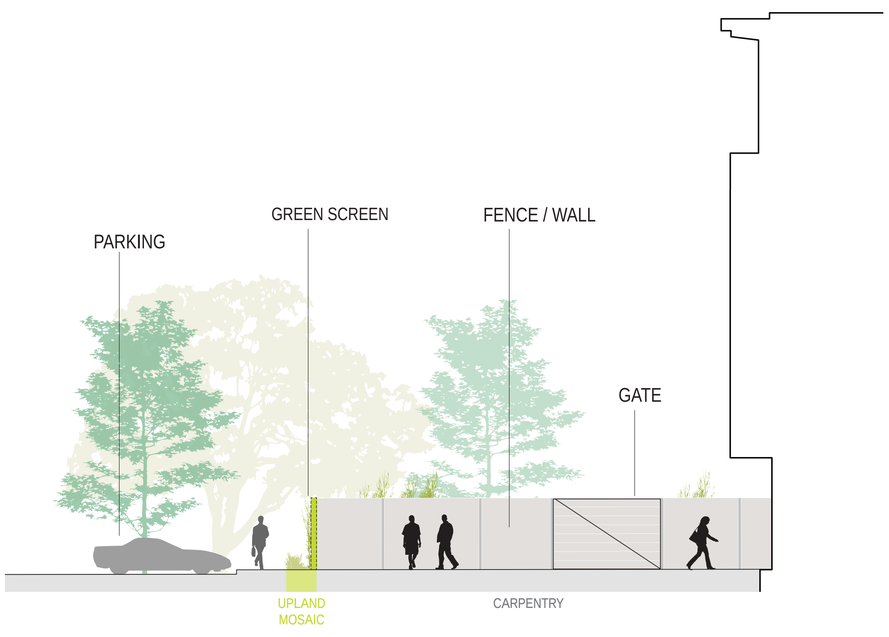

ELEVATION C: CARPENTRY

SCALE: 1"=8'-0"

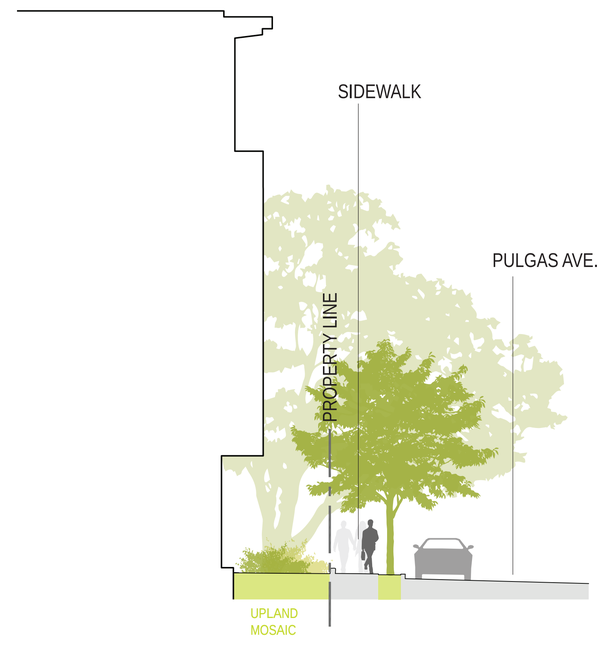

ELEVATION B: PULGAS AVE.

SCALE: 1" = 8'-0"

1 LANDSCAPE ELEVATIONS

0' 10' 20' 40'

N

PROJECT

2535 PULGAS AVENUE
EAST PALO ALTO, CALIFORNIA

DESIGN ARCHITECTS

WM+P

WILLIAM McDONOUGH + PARTNERS
ARCHITECTURE AND COMMUNITY PLANNING

700 E. JEFFERSON ST.
CHARLOTTESVILLE, VA 22902
T 434.979.1111 F 434.979.1112
WWW.MCDONOUGHPARTNERS.COM

ARCHITECT OF RECORD

CONSULTANTS

RANA LANDSCAPE ARCHITECTURE

www.ranacohabitat.com
27875 BERWICK DRIVE, SUITE A, CARMEL, CA
phone (831) 659.3820 fax (831) 646.2106

STATUS

PLANNING APPLICATION

ISSUE

MARK	DATE	DESCRIPTION
	06/12/2020	100% PLANNING APPLICATION

PROJECT NO: xx

DRAWN BY: AA

CHECK BY: MY

PLANNING SUBMITTAL
2020

SHEET TITLE / SHEET NUMBER

LANDSCAPE PLAN

L2

NOT FOR CONSTRUCTION

SITE TREE PALETTE

CERCIS OCCIDENTALIS
(WESTERN REDBUD)
Quantity: 18

GINKO BILOBA 'AUTUMN GOLD'
(MAIDENHAIR TREE)
Quantity: 11

PLATANUS RACEMOSA
(WESTERN SYCAMORE)
Quantity: 14

QUERCUS AGRIFOLIA
(COAST LIVE OAK)
Quantity: 16

STREET TREE PALETTE

ARBUTUS 'MARINA'
(STRAWBERRY TREE)
Quantity: 10

GENERAL NOTES

1. REFER TO L4 FOR DETAILED PLANT PALETTE AND IMAGERY
2. REFER TO L7 FOR PLANTING DETAILS
3. AN IRRIGATION SYSTEM PROVIDING 100% COVERAGE IN ACCORDANCE WITH EAST PALO ALTO AND CALIFORNIA MODEL EFFICIENT LANDSCAPE ORDINANCE WILL BE PROVIDED

KEY NOTES

1. SPECIMEN TREE, REFER TO SITE TREE PALETTE
2. ACCENT TREE, REFER TO SITE TREE PALETTE
3. STREET TREE, PER PUBLIC WORKS
4. TREES IN GRATES

1 TREE PALETTE

0' 10' 20' 40'

N

PROJECT

2535 PULGAS AVENUE
EAST PALO ALTO, CALIFORNIA

DESIGN ARCHITECTS

WM+P

WILLIAM McDONOUGH + PARTNERS
ARCHITECTURE AND COMMUNITY PLANNING
700 E. JEFFERSON ST.
CHARLOTTESVILLE, VA 22902
T 434.979.1111 F 434.979.1112
WWW.MCDONOUGHPARTNERS.COM

ARCHITECT OF RECORD

CONSULTANTS

RANA LANDSCAPE ARCHITECTURE
www.ranacohabitat.com
27875 BERWICK DRIVE, SUITE A, CARMEL, CA
phone (831) 659.3820 fax (831) 646.2106

STATUS
PLANNING APPLICATION

ISSUE

MARK	DATE	DESCRIPTION
	06/12/2020	100% PLANNING APPLICATION

PROJECT NO: xx
DRAWN BY: AA
CHECK BY: MY

PLANNING SUBMITTAL
2020

SHEET TITLE / SHEET NUMBER

LANDSCAPE PLAN

L3

NOT FOR CONSTRUCTION

UPLAND MOSAIC

TREES

***ARBUTUS 'MARINA'* (NCN)**
Container Size: 24" Box
WUCOLS: Low

***CERCIS OCCIDENTALIS* (WESTERN REDBUD)**
Container Size: 36" Box
WUCOLS: Very Low
CA Native

***QUERCUS AGRIFOLIA* (COAST LIVE OAK)**
Container Size: 36" Box
WUCOLS: Very Low
CA Native

SHRUBS / GRASSES / PERENNIALS

***ACHILLEA MILLEFOLIUM* (YARROW)**
Container Size: 1 gal
WUCOLS: Low
CA Native

ARCTOSTAPHYLOS DENSIFLORA 'HOWARD MCMINN'
Container Size: 5 gal
WUCOLS: Low
CA Native

***BACCHARIS PILULARIS PILULARIS* (COYOTE BRUSH)**
Container Size: 1 gal
WUCOLS: Low
CA Native

***CEANOTHUS MARITIMUS* (MARITIME CEANOTHUS)**
Container Size: 5 gal
WUCOLS: Low
CA Native

***DESCHAMPSIA CAESPITOSA* (TUFTED HAIRGRASS)**
Container Size: 1 gal
WUCOLS: Low
CA Native

***DICHELOSTEMMA CAPITATUM* (BLUE DICKS)**
Container Size: 1 gal
WUCOLS: Very Low
CA Native

***ERIOGONUM NUDUM* (NAKED BUCKWHEAT)**
Container Size: 1 gal
WUCOLS: Low
CA Native

***GRINDELIA HIRSUTULA VAR. HIRSUTULA* (GUMPLANT)**
Container Size: 1 gal
WUCOLS: Low
CA Native

***HETEROMELES ARBUTIFOLIA* (TOYON)**
Container Size: 5 gal
WUCOLS: Low
CA Native

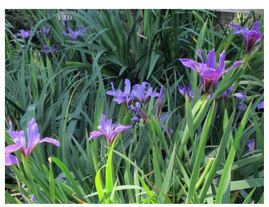

***IRIS DOUGLASIANA* (DOUGLAS IRIS)**
Container Size: 1 gal
WUCOLS: Low
CA Native

***RHAMNUS CALIFORNICA* (COFFEEBERRY)**
Container Size: 5 gal
WUCOLS: Low
CA Native

***SALVIA LEUCOPHYLLA* (PURPLE SAGE)**
Container Size: 5 gal
WUCOLS: Low
CA Native

RIPARIAN / MARSH TRANSITION

TREES

***GINGKO BILOBA 'AUTUMN GOLD'* (MAIDENHAIR TREE)**
Container Size: 36" Box
WUCOLS: Medium

***PLATANUS RACEMOSA* (WESTERN SYCAMORE)**
Container Size: 24" Box
WUCOLS: Medium
CA Native

SHRUBS / GRASSES / PERENNIALS

***ARTEMISIA DOUGLASIANA* (MUGWORT)**
Container Size: 1 gal
WUCOLS: Low
CA Native

***BACCHARIS DOUGLASII* (MARSH BACCHARIS)**
Container Size: 1 gal
WUCOLS: Medium
CA Native

CAREX PRAEGRACILIS (FIELD SEDGE)
Container Size: 1 gal
WUCOLS: Medium
CA Native

***DESCHAMPSIA CAESPITOSA* (TUFTED HAIRGRASS)**
Container Size: 1 gal
WUCOLS: Low
CA Native

***DISTICHLIS SPICATA* (SALT GRASS)**
Container Size: 1 gal
WUCOLS: Low
CA Native

***ELYMUS TRITICOIDES* (CREEPING WILD RYE)**
Container Size: 1 gal
WUCOLS: Low
CA Native

***GRINDELIA STRICTA VAR. ANGUSTIFOLIA* (GUM-PLANT)**
Container Size: 1 gal
WUCOLS: Low
CA Native

***HORDEUM BRACHYANTHERUM* (MEADOW BARLEY)**
Container Size: 1 gal
WUCOLS: unknown
CA Native

***IRIS DOUGLASIANA* (DOUGLAS IRIS)**
Container Size: 1 gal
WUCOLS: Low
CA Native

***JUNCUS PATENS* (CALIFORNIA GREY RUSH)**
Container Size: 1 gal
WUCOLS: Low
CA Native

***LIMONIUM CALIFORNICUM* (SEA LAVENDER)**
Container Size: 1 gal
WUCOLS: Low
CA Native

***ROSA CALIFORNICA* (CALIFORNIA WILD ROSE)**
Container Size: 1 gal
WUCOLS: Low
CA Native

***SCHOENOPLECTUS CALIFORNICUS* (BULRUSH)**
Container Size: 1 gal
WUCOLS: unknown
CA Native

***SISYRINCHIUM BELLUM* (WESTERN BLUE-EYED GRASS)**
Container Size: 1 gal
WUCOLS: Very Low
CA Native

***SYMPHIOTRICHUM CHILENSIS* (CALIFORNIA ASTER)**
Container Size: 1 gal
WUCOLS: unknown
CA Native

GENERAL NOTES:

1. WUCOLS = WATER USE CLASSIFICATIONS OF LANDSCAPE SPECIES
2. AN IRRIGATION SYSTEM PROVIDING 100% COVERAGE IN ACCORDANCE WITH EAST PALO ALTO AND CALIFORNIA EFFICIENT LANDSCAPE ORDINANCE WILL BE PROVIDED
3. PLANTS ARE CONSISTENT WITH S.F. BCDC SHORELINE PLANTS GUIDE

1 PRELIMINARY PLANT LIST

PROJECT

2535 PULGAS AVENUE
EAST PALO ALTO, CALIFORNIA

DESIGN ARCHITECTS

WM+P

WILLIAM McDONOUGH + PARTNERS
ARCHITECTURE AND COMMUNITY PLANNING

700 E. JEFFERSON ST.
CHARLOTTESVILLE, VA 22902
T 434.979.1111 F 434.979.1112
WWW.MCDONOUGHPARTNERS.COM

ARCHITECT OF RECORD

CONSULTANTS

RANA LANDSCAPE ARCHITECTURE

www.ranacohabitat.com
27875 BERWICK DRIVE, SUITE A, CARMEL, CA
phone (831) 659.3820 fax (831) 646.2106

STATUS

PLANNING APPLICATION

ISSUE

ISSUE

MARK	DATE	DESCRIPTION
	06/12/2020	100% PLANNING APPLICATION

PROJECT NO: xx

DRAWN BY: AA

CHECK BY: MY

PLANNING SUBMITTAL
2020

SHEET TITLE / SHEET NUMBER

LANDSCAPE PLAN

L4

NOT FOR CONSTRUCTION

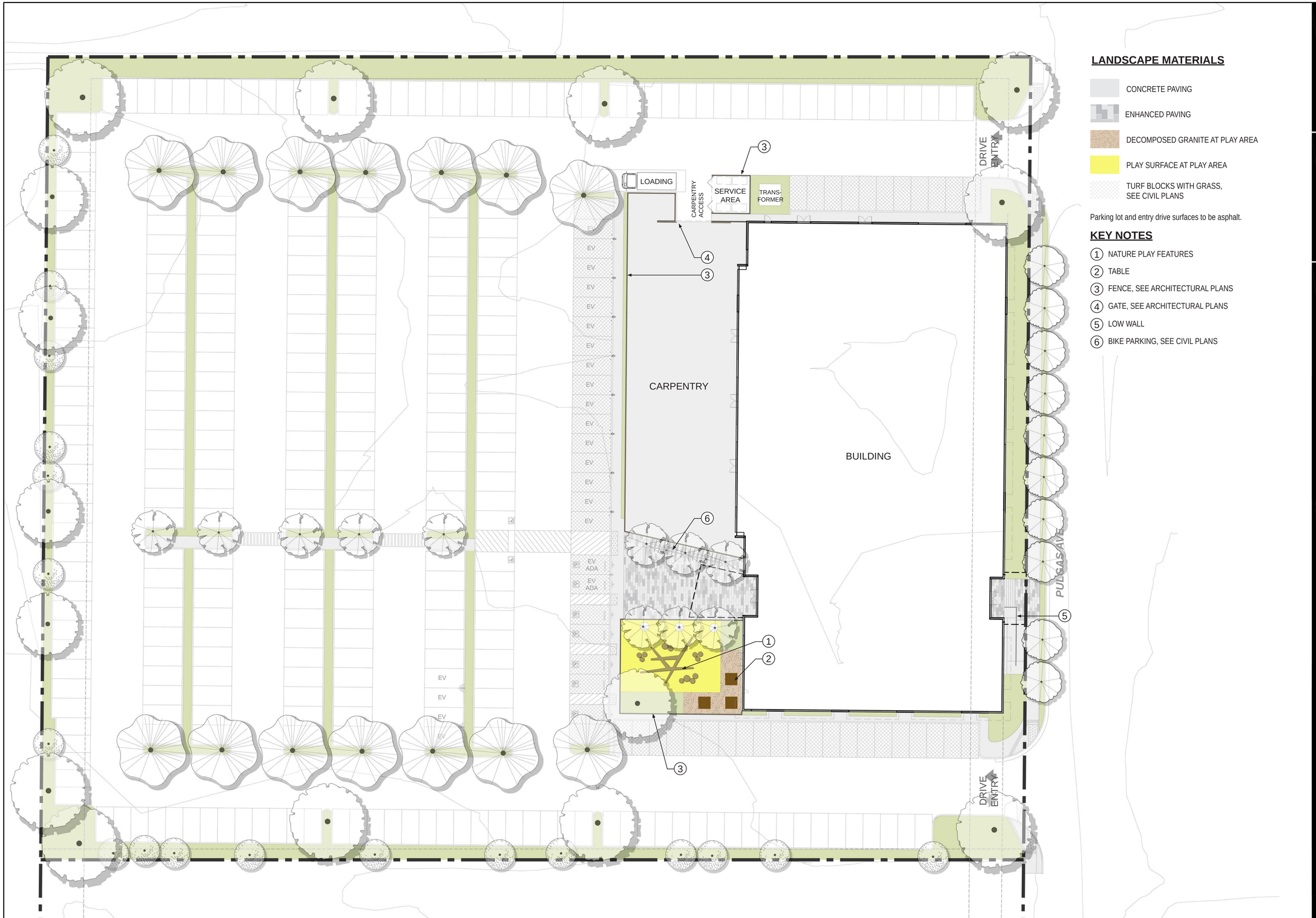

LANDSCAPE MATERIALS

- CONCRETE PAVING
- ENHANCED PAVING
- DECOMPOSED GRANITE AT PLAY AREA
- PLAY SURFACE AT PLAY AREA
- TURF BLOCKS WITH GRASS, SEE CIVIL PLANS

Parking lot and entry drive surfaces to be asphalt.

KEY NOTES

1. NATURE PLAY FEATURES
2. TABLE
3. FENCE, SEE ARCHITECTURAL PLANS
4. GATE, SEE ARCHITECTURAL PLANS
5. LOW WALL
6. BIKE PARKING, SEE CIVIL PLANS

1 LANDSCAPE MATERIALS

0' 10' 20' 40'

N

PROJECT

2535 PULGAS AVENUE
EAST PALO ALTO, CALIFORNIA

DESIGN ARCHITECTS

WM+P

WILLIAM McDONOUGH + PARTNERS
ARCHITECTURE AND COMMUNITY PLANNING

700 E. JEFFERSON ST.
CHARLOTTESVILLE, VA 22902
T 434.979.1111 F 434.979.1112
WWW.MCDONOUGHPARTNERS.COM

ARCHITECT OF RECORD

CONSULTANTS

RANA LANDSCAPE ARCHITECTURE

www.ranacohabitat.com
27875 BERWICK DRIVE, SUITE A, CARMEL, CA
phone (831) 659.3820 fax (831) 646.2106

STATUS

PLANNING APPLICATION

ISSUE

ISSUE

MARK	DATE	DESCRIPTION
	06/12/2020	100% PLANNING APPLICATION

PROJECT NO: xx

DRAWN BY: AA

CHECK BY: MY

PLANNING SUBMITTAL
2020

SHEET TITLE / SHEET NUMBER

LANDSCAPE PLAN

L5

NOT FOR CONSTRUCTION

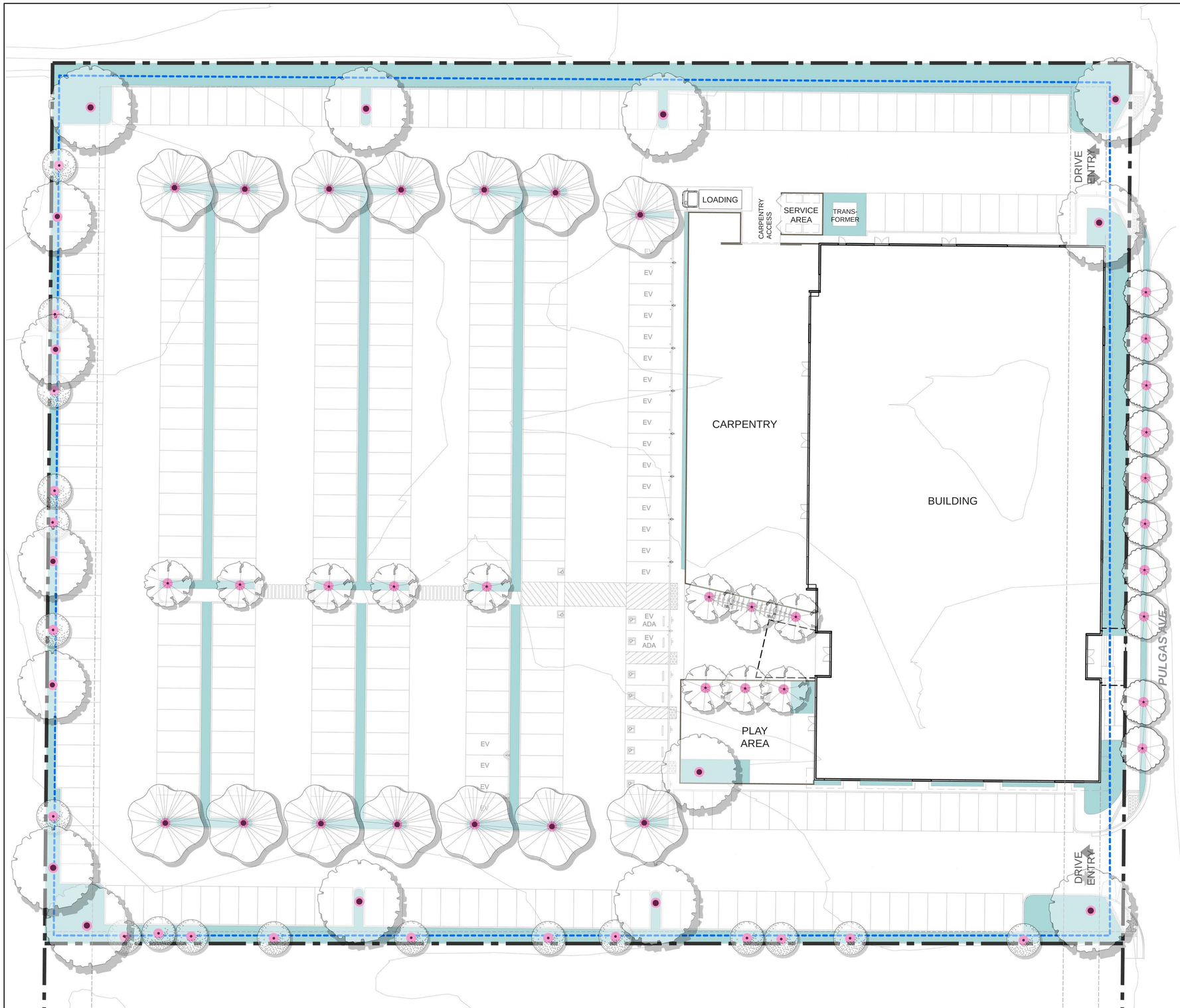

IRRIGATION SYSTEM

- IRRIGATION MAIN LINE
- DRIP IRRIGATION
- TREE BUBBLER

I AGREE TO COMPLY WITH REQUIREMENTS OF THE WATER EFFICIENT LANDSCAPE ORDINANCE (WELO) AND SUBMIT A COMPLETE LANDSCAPE DOCUMENT PACKAGE.

MATT YURUS, PLA #4355

GENERAL NOTES

1. REFER TO SHEET L8 FOR IRRIGATION DETAILS
2. IRRIGATION SOURCED WITH POTABLE WATER

1 LANDSCAPE IRRIGATION

0' 10' 20' 40'

N

PROJECT

2535 PULGAS AVENUE
EAST PALO ALTO, CALIFORNIA

DESIGN ARCHITECTS

WM+P
WILLIAM McDONOUGH + PARTNERS
ARCHITECTURE AND COMMUNITY PLANNING
700 E. JEFFERSON ST.
CHARLOTTESVILLE, VA 22902
T 434.979.1111 F 434.979.1112
WWW.MCDONOUGHPARTNERS.COM

ARCHITECT OF RECORD

CONSULTANTS

RANA LANDSCAPE ARCHITECTURE
www.ranacohabitat.com
27875 BERWICK DRIVE, SUITE A, CARMEL, CA
phone (831) 659.3820 fax (831) 646.2106

STATUS

PLANNING APPLICATION

ISSUE

ISSUE

MARK	DATE	DESCRIPTION
	06/12/2020	100% PLANNING APPLICATION

PROJECT NO: xx

DRAWN BY: AA

CHECK BY: MY

PLANNING SUBMITTAL
2020

SHEET TITLE / SHEET NUMBER

LANDSCAPE PLAN

L6

NOT FOR CONSTRUCTION

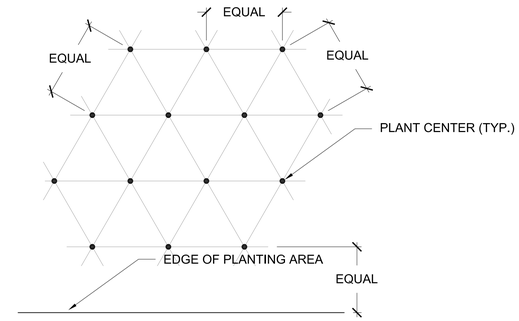

PLAN VIEW

NOTE: ALL PLANTS SHALL BE PLANTED AT EQUAL TRIANGULAR SPACING (EXCEPT WHERE SHOWN ON PLANS AS INFORMAL GROUPINGS). REFER TO PLANT LEGEND FOR SPACING DISTANCE BETWEEN PLANTS.

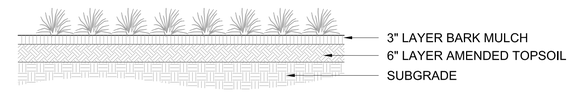

SECTION

GROUNDCOVER & SHRUB MASS PLANTING

SCALE: 1/2" = 1'

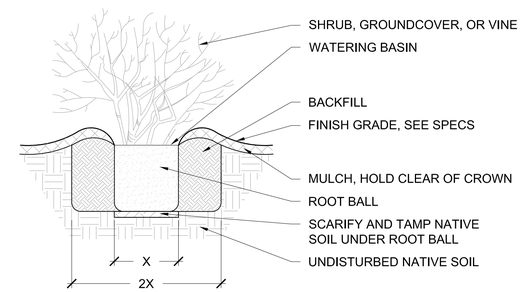

SHRUB AND PERENNIAL PLANTING

SCALE: 1/2" = 1'

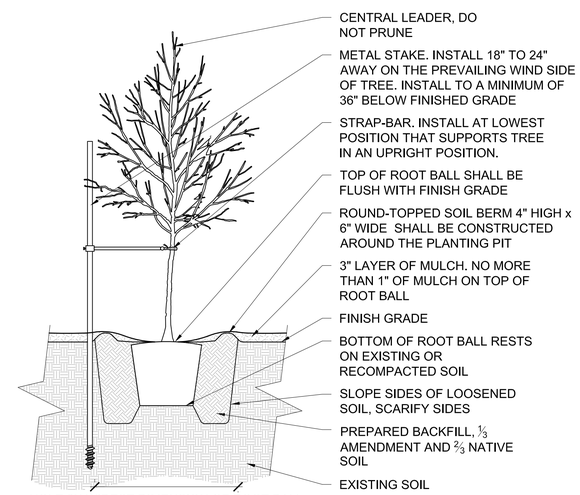

TREE PLANTING DETAIL WITH STAKING

SCALE: 1/2" = 1'

PROJECT

2535 PULGAS AVENUE
EAST PALO ALTO, CALIFORNIA

DESIGN ARCHITECTS

WM+P
WILLIAM McDONOUGH + PARTNERS
ARCHITECTURE AND COMMUNITY PLANNING
700 E. JEFFERSON ST.
CHARLOTTESVILLE, VA 22902
T 434.979.1111 F 434.979.1112
WWW.MCDONOUGHPARTNERS.COM

ARCHITECT OF RECORD

CONSULTANTS

RANA
LANDSCAPE ARCHITECTURE
www.ranacohabitat.com
27875 BERWICK DRIVE, SUITE A, CARMEL, CA
phone (831) 659.3820 fax (831) 646.2106

STATUS

PLANNING APPLICATION

ISSUE

ISSUE

MARK	DATE	DESCRIPTION
	06/12/2020	100% PLANNING APPLICATION

PROJECT NO: xx

DRAWN BY: AA

CHECK BY: MY

PLANNING SUBMITTAL
2020

SHEET TITLE / SHEET NUMBER

PLANTING DETAILS

L7

NOT FOR CONSTRUCTION

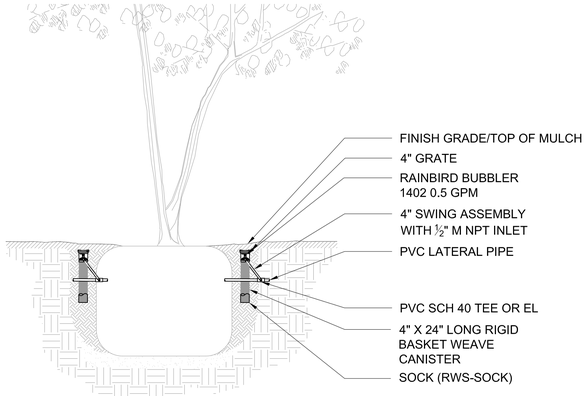

NOTE: PROVIDE (2) BUBBLERS PER TREE

ROOT WATERING TREE BUBBLER
SCALE: NTS

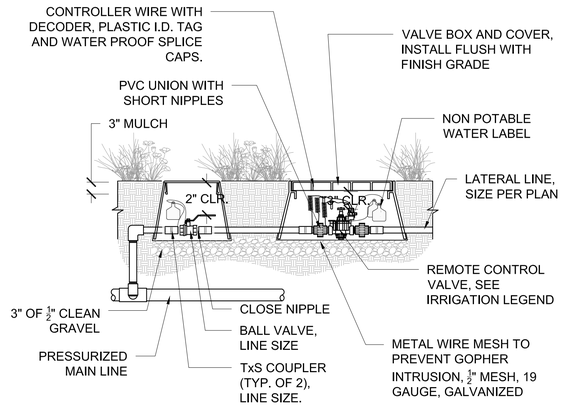

REMOTE CONTROL VALVE WITH ISOLATION VALVE
SCALE: NTS

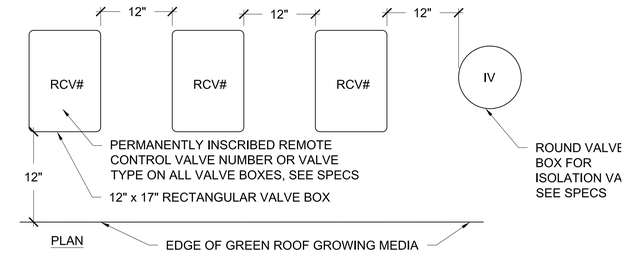

1. CENTER VALVE BOX OVER REMOTE CONTROL VALVE TO FACILITATE SERVICING V
2. SET VALVE BOXES ½" ABOVE FINISH GRADE, TRIM AS NECESSARY.
3. SET VALVE BOXES PARALLEL TO EACH OTHER AND PERPENDICULAR TO GREEN R EDGE RESTRAINT.
4. AVOID HEAVILY COMPACTING SOIL AROUND VALVE BOXES TO PREVENT COLLAPS DEFORMATION OF VALVE BOX SIDES.
5. INSTALL EXTENSION BY VALVE BOX MANUFACTURER AS REQUIRED TO COMPLETE ENCLOSE ASSEMBLY FOR EASY ACCESS.
6. WHERE POSSIBLE, PLACE (2) VALVES IN A SINGLE VALVE BOX.

VALVE BOX LAYOUT
SCALE: NTS

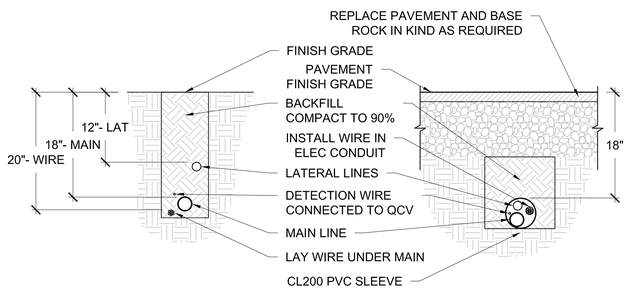

NOTES:
1. TIE A LOOSE 20" LOOP IN WIRE AT CHANGES IN DIRECTION AND AT INTERVALS OF 100'.
2. INSTALL PIPE, WIRE AND SLEEVES UNDER PAVEMENT PRIOR TO PLACEMENT OF PAVEMENT AND MINIMUM OF 18" DEEP.
3. BUNDLE AND TAPE WIRE AT 10' INTERVALS
4. SOIL BACKFILL TO BE FREE OF ROCK, DIRT CLODS, AND DEBRIS GREATER THAN 1/2" DIAMETER WITHIN 4" OF PIPE.
5. ALTERNATE: BACKFILL WITH SAND IMPORT

TRENCHING DETAIL
SCALE: NTS

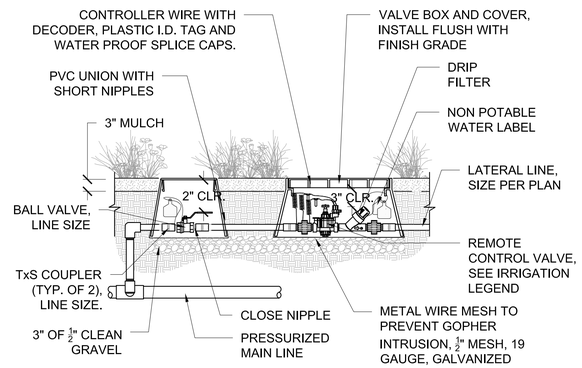

DRIP VALVE WITH ISOLATION VALVE
SCALE: NTS

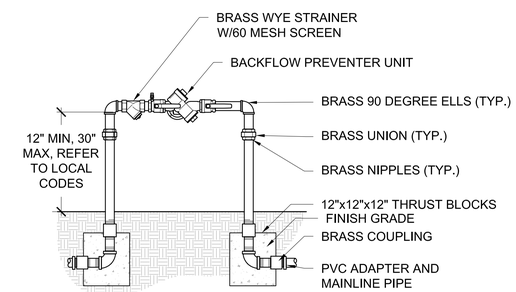

BACKFLOW PREVENTER
SCALE: NTS

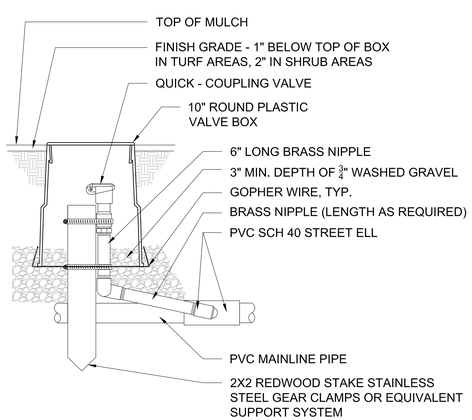

QUICK COUPLER
SCALE: NTS

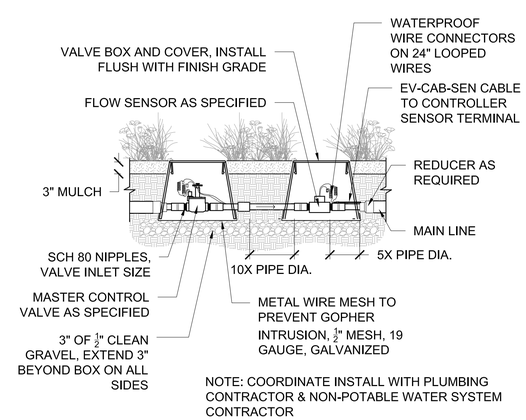

NOTE: COORDINATE INSTALL WITH PLUMBING CONTRACTOR & NON-POTABLE WATER SYSTEM CONTRACTOR

MASTER VALVE WITH FLOW SENSOR
SCALE: NTS

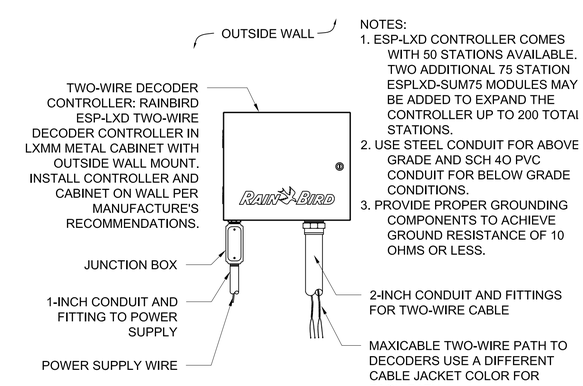

NOTES:
1. ESP-LXD CONTROLLER COMES WITH 50 STATIONS AVAILABLE. TWO ADDITIONAL 75 STATION ESPLXD-SUM75 MODULES MAY BE ADDED TO EXPAND THE CONTROLLER UP TO 200 TOTAI STATIONS.
2. USE STEEL CONDUIT FOR ABOVE GRADE AND SCH 4O PVC CONDUIT FOR BELOW GRADE CONDITIONS.
3. PROVIDE PROPER GROUNDING COMPONENTS TO ACHIEVE GROUND RESISTANCE OF 10 OHMS OR LESS.

CONTROLLER - EXTERIOR WALL MOUNT
SCALE: NTS

PROJECT

2535 PULGAS AVENUE
EAST PALO ALTO, CALIFORNIA

DESIGN ARCHITECTS

WM+P

WILLIAM McDONOUGH + PARTNERS
ARCHITECTURE AND COMMUNITY PLANNING

700 E. JEFFERSON ST.
CHARLOTTESVILLE, VA 22902
T 434.979.1111 F 434.979.1112
WWW.MCDONOUGHPARTNERS.COM

ARCHITECT OF RECORD

CONSULTANTS

RANA LANDSCAPE ARCHITECTURE
www.ranacohabitat.com
27875 BERWICK DRIVE, SUITE A, CARMEL, CA
phone (831) 659.3820 fax (831) 646.2106

STATUS

PLANNING APPLICATION

ISSUE

MARK	DATE	DESCRIPTION
	06/12/2020	100% PLANNING APPLICATION

PROJECT NO: xx
DRAWN BY: AA
CHECK BY: MY

PLANNING SUBMITTAL
2020

SHEET TITLE / SHEET NUMBER

IRRIGATION DETAILS

L8

NOT FOR CONSTRUCTION

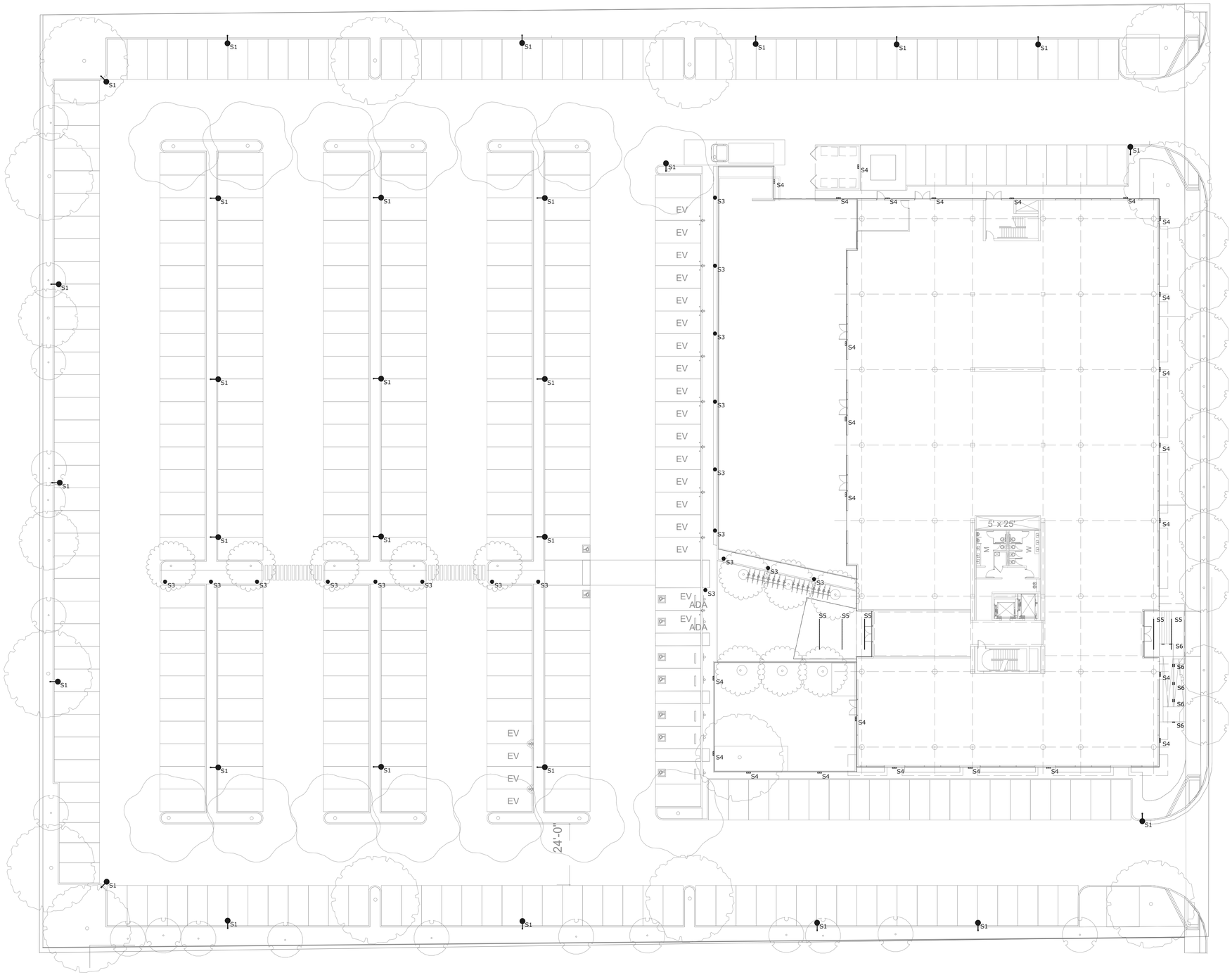

1 SITE LIGHTING PLAN
SCALE: 1"=20' 0"

S1 LITHONIA RADEAN
88 WATTS
11800 LUMENS
HEIGHT = 20'-0"

S3 BEGA BOLLARD
6 WATTS
335 LUMENS
HEIGHT = 2'-6"

S4 BEGA WALL 22360
15 WATTS
1024 LUMENS
MOUNTING HEIGHT = 9'-0"

S5 KELVIX LINEAR LENSED
5.3 WATTS / LINEAR FT
690 LUMENS / LINEAR FT
MOUNTING HEIGHT = 9'-6"

S6 BEGA RECESSED STEP LIGHT 33 055
8.4 WATTS
480 LUMENS
MOUNTING HEIGHT = 0'-6"

N

PROJECT

2535 PULGAS AVENUE
EAST PALO ALTO, CALIFORNIA

DESIGN ARCHITECTS

WM+P

WILLIAM McDONOUGH + PARTNERS
ARCHITECTURE AND COMMUNITY PLANNING

700 E. JEFFERSON ST.
CHARLOTTESVILLE, VA 22902
T 434.979.1111 F 434.979.1112
WWW.MCDONOUGHPARTNERS.COM

ARCHITECT OF RECORD

CONSULTANTS

LUMA

STATUS

PLANNING APPLICATION

ISSUE

ISSUE

MARK	DATE	DESCRIPTION
	6/01/2020	
	6/03/2020	
	6/11/2020	
	6/12/2020	
	6/24/2020	
	6/29/2020	100% PLANNING APPLICATION

PROJECT NO: xx
DRAWN BY: JGM
CHECK BY: GAS

PLANNING SUBMITTAL
2020

SHEET TITLE / SHEET NUMBER

SITE LIGHTING PLAN

E1

NOT FOR CONSTRUCTION

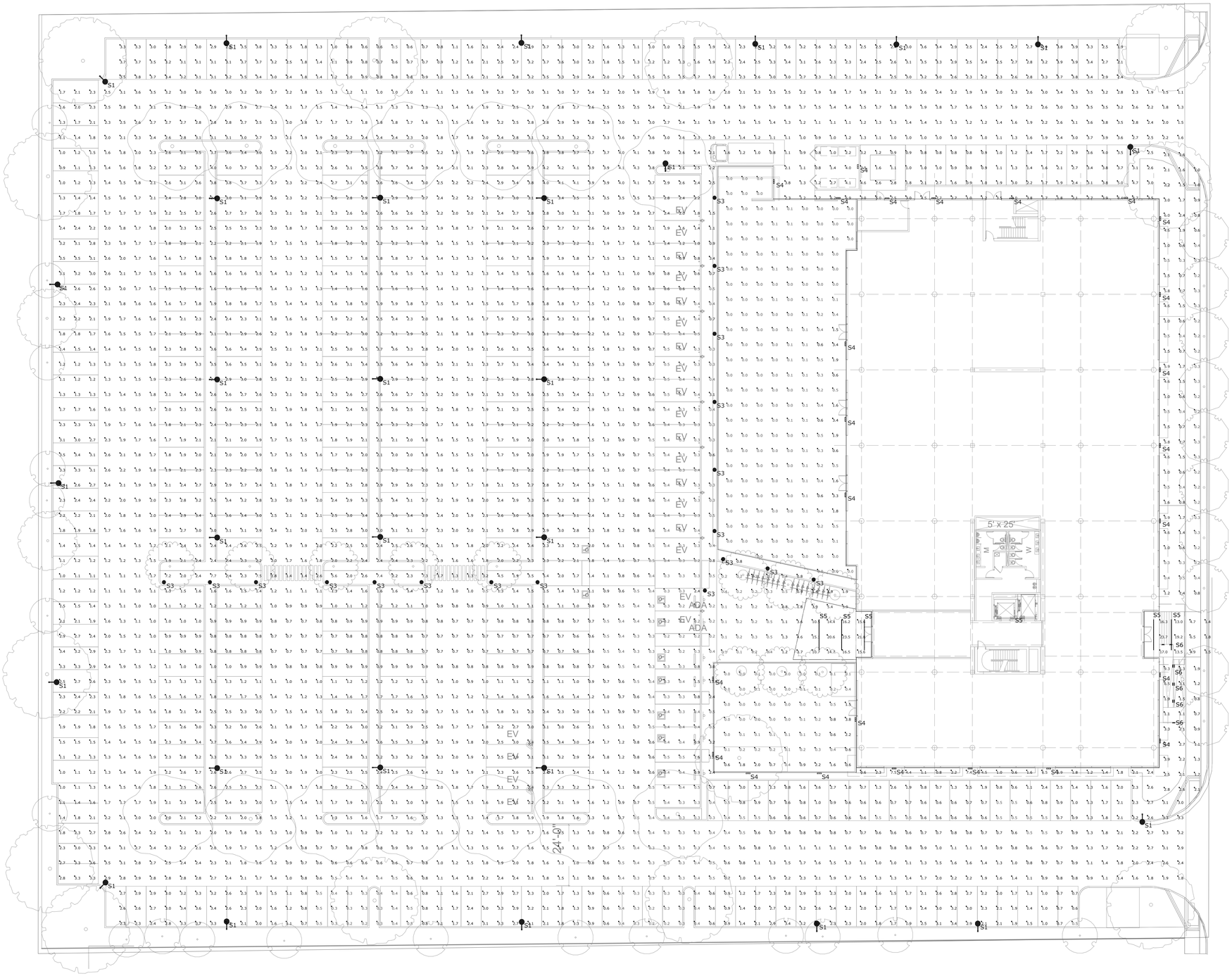

1 SITE PHOTOMETRIC PLAN - LIGHT LEVELS IN FOOTCANDLES

SCALE: 1" = 20'-0"

Carpentry
Illuminance (Fc)
Average=0.16
Maximum=3.4
Minimum=0.0

Day Care
Illuminance (Fc)
Average=0.40
Maximum=3.8
Minimum=0.0

Entry Areas
Illuminance (Fc)
Average=5.52
Maximum=23.7
Minimum=0.1

Parking Lot
Illuminance (Fc)
Average=1.87
Maximum=8.8
Minimum=0.2

Pulgas Sidewalk
Illuminance (Fc)
Average=1.67
Maximum=9.3
Minimum=0.2

N

PROJECT

2535 PULGAS AVENUE
EAST PALO ALTO, CALIFORNIA

DESIGN ARCHITECTS

WM+P

WILLIAM McDONOUGH + PARTNERS
ARCHITECTURE AND COMMUNITY PLANNING

700 E. JEFFERSON ST.
CHARLOTTESVILLE, VA 22902
T 434.979.1111 F 434.979.1112
WWW.MCDONOUGHPARTNERS.COM

ARCHITECT OF RECORD

CONSULTANTS

LUMA

STATUS

PLANNING APPLICATION

ISSUE

ISSUE

MARK	DATE	DESCRIPTION
	6/01/2020	
	6/11/2020	
	6/12/2020	
	6/18/2020	
	6/24/2020	
	6/29/2020	100% PLANNING APPLICATION

PROJECT NO: xx

DRAWN BY: JGM

CHECK BY: GAS

PLANNING SUBMITTAL
2020

SHEET TITLE / SHEET NUMBER

SITE PHOTOMETRIC PLAN

E2

NOT FOR CONSTRUCTION

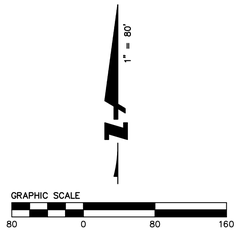

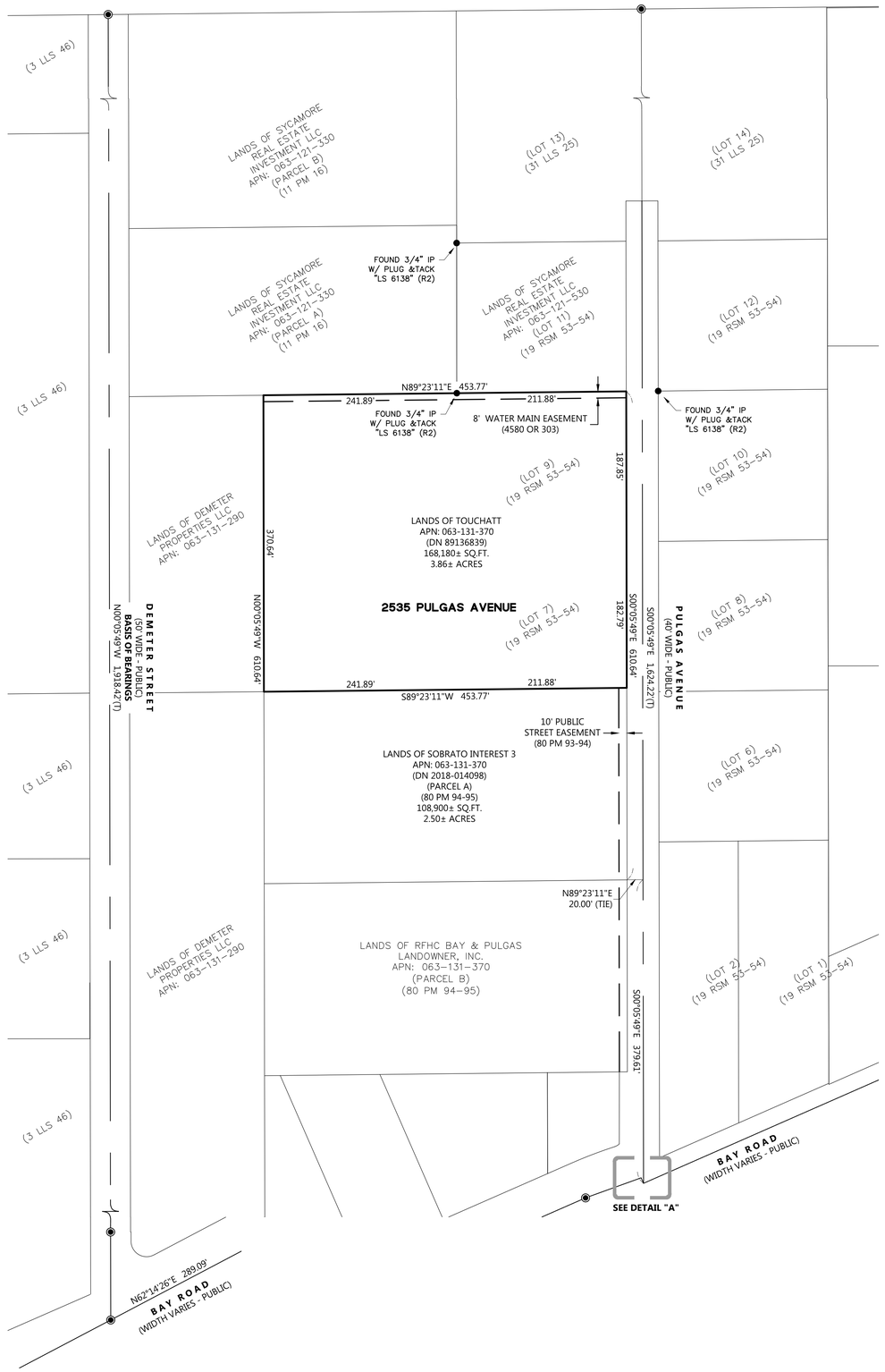

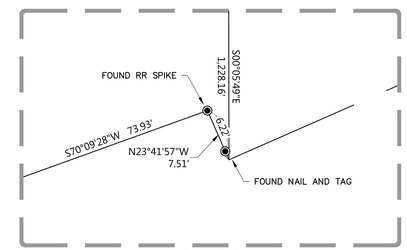

DETAIL "A"
(1" = 10')

ABBREVIATIONS:

APN	ASSESSORS PARCEL NUMBER
DN	DOCUMENT NUMBER
LLS	LICENSED LAND SURVEYOR (MAPS)
LS	LICENSED SURVEYOR
MON	MONUMENT
IP	IRON PIPE
PM	PARCEL MAP
(R#)	DENOTES RECORD REFERENCE
RR	RAILROAD
RSM	RECORD OF SURVEY MAP
SQ.FT.	SQUARE FEET
(T)	DENOTES TOTAL (DISTANCE)

LINETYPES:

- ADJACENT LOT LINE
- EASEMENT LINE
- ROAD CENTERLINE
- SUBJECT BOUNDARY

SYMBOLS:

- FOUND MONUMENT PER (R1)(R2) UNLESS OTHERWISE NOTED
- FOUND IRON PIPE AS NOTED

RECORD REFERENCES:

R1	80 PM 93-94
R2	31 LLS 25

BASIS OF BEARINGS:

THE BEARINGS SHOWN ON THIS SURVEY ARE DERIVED FROM THE NORTH AMERICAN DATUM OF 1983 (NAD83) AND ARE THE PRODUCT OF GNSS OBSERVATIONS PERFORMED BY BKF. THE BEARING OF NORTH 00°05'49" WEST BETWEEN THE TWO FOUND MONUMENTS ON DEMETER STREET WAS TAKEN AS THE BASIS OF BEARINGS FOR THIS SURVEY.

BENCHMARK:

THE ELEVATIONS ON THIS SURVEY ARE NAVD88 AND ARE THE PRODUCT OF GNSS OBSERVATIONS PERFORMED BY BKF. THE SITE BENCHMARK IS BKF CONTROL POINT NO. 211, A MAG NAIL AND WASHER SET IN PAVEMENT.

ELEVATION = 11.14'

PROJECT

2535 PULGAS AVENUE
EAST PALO ALTO, CALIFORNIA

DESIGN ARCHITECTS

WM+P

WILLIAM McDONOUGH + PARTNERS
ARCHITECTURE AND COMMUNITY PLANNING

700 E. JEFFERSON ST.
CHARLOTTESVILLE, VA 22902
T 434.979.1111 F 434.979.1112
WWW.MCDONOUGHPARTNERS.COM

ENGINEER OF RECORD

BKF 100+ YEARS
ENGINEERS . SURVEYORS . PLANNERS

BKF ENGINEERS
255 SHORELINE DR, SUITE 200
REDWOOD CITY, CA 94065

CONSULTANTS

STATUS

ISSUE

ISSUE

MARK	DATE	DESCRIPTION

PROJECT NO:	2019-0112
DRAWN BY:	CLB
CHECK BY:	LKY

PLANNING SUBMITTAL
2020

SHEET TITLE / SHEET NUMBER

EXISTING BOUNDARY

C1.0

NOT FOR CONSTRUCTION

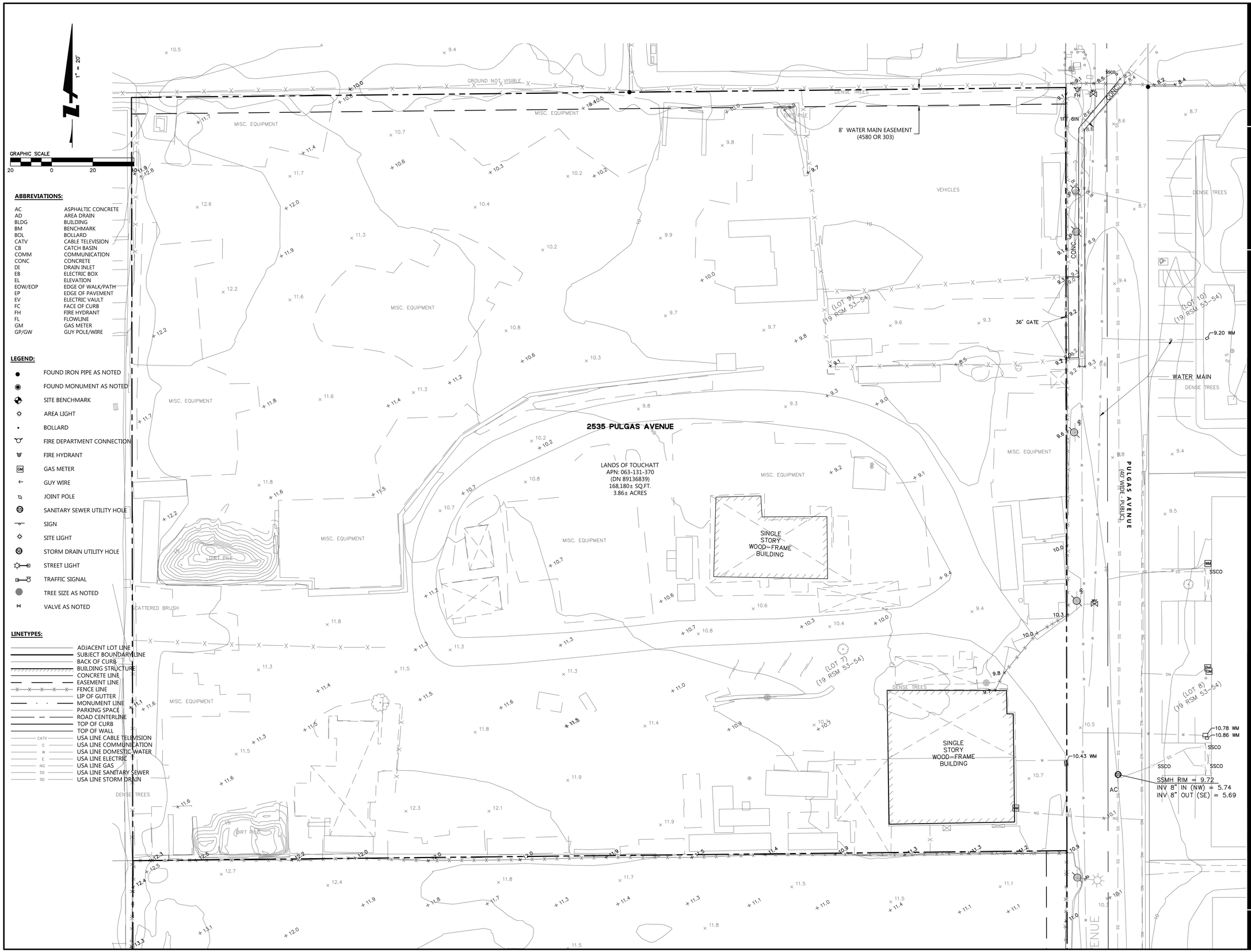

ABBREVIATIONS:

AC	ASPHALTIC CONCRETE
AD	AREA DRAIN
BLDG	BUILDING
BM	BENCHMARK
BOL	BOLLARD
CATV	CABLE TELEVISION
CB	CATCH BASIN
COMM	COMMUNICATION
CONC	CONCRETE
DI	DRAIN INLET
EB	ELECTRIC BOX
EL	ELEVATION
EOW/EOP	EDGE OF WALK/PATH
EP	EDGE OF PAVEMENT
EV	ELECTRIC VAULT
FC	FACE OF CURB
FH	FIRE HYDRANT
FL	FLOWLINE
GM	GAS METER
GP/GW	GUY POLE/WIRE

LEGEND:

- FOUND IRON PIPE AS NOTED
- FOUND MONUMENT AS NOTED
- SITE BENCHMARK
- AREA LIGHT
- BOLLARD
- FIRE DEPARTMENT CONNECTION
- FIRE HYDRANT
- GAS METER
- GUY WIRE
- JOINT POLE
- SANITARY SEWER UTILITY HOLE
- SIGN
- SITE LIGHT
- STORM DRAIN UTILITY HOLE
- STREET LIGHT
- TRAFFIC SIGNAL
- TREE SIZE AS NOTED
- VALVE AS NOTED

LINETYPES:

- ADJACENT LOT LINE
- SUBJECT BOUNDARY LINE
- BACK OF CURB
- BUILDING STRUCTURE
- CONCRETE LINE
- EASEMENT LINE
- FENCE LINE
- LIP OF GUTTER
- MONUMENT LINE
- PARKING SPACE
- ROAD CENTERLINE
- TOP OF CURB
- TOP OF WALL
- CATV — USA LINE CABLE TELEVISION
- C — USA LINE COMMUNICATION
- W — USA LINE DOMESTIC WATER
- E — USA LINE ELECTRIC
- NG — USA LINE GAS
- SS — USA LINE SANITARY SEWER
- SD — USA LINE STORM DRAIN

PROJECT

2535 PULGAS AVENUE
EAST PALO ALTO, CALIFORNIA

DESIGN ARCHITECTS

WM+P

WILLIAM McDONOUGH + PARTNERS
ARCHITECTURE AND COMMUNITY PLANNING

700 E. JEFFERSON ST.
CHARLOTTESVILLE, VA 22902
T 434.979.1111 F 434.979.1112
WWW.MCDONOUGHPARTNERS.COM

ENGINEER OF RECORD

BKF 100+ YEARS
ENGINEERS . SURVEYORS . PLANNERS

BKF ENGINEERS
255 SHORELINE DR, SUITE 200
REDWOOD CITY, CA 94065

CONSULTANTS

STATUS

ISSUE

ISSUE

MARK	DATE	DESCRIPTION

PROJECT NO:	2019-0112
DRAWN BY:	CLB
CHECK BY:	LKY

PLANNING SUBMITTAL
2020

SHEET TITLE / SHEET NUMBER

EXISTING TOPO

C1.1

NOT FOR CONSTRUCTION

ABBREVIATIONS:

SYMBOL	DESCRIPTION
ADA	AMERICANS WITH DISABILITIES ACT
CC	CRENULATED CURB
C&G	CURB AND GUTTER
DWY	DRIVEWAY
EVCS	ELECTRIC VEHICLE CHARGING STATION
R	RADIUS
ROW	RIGHT OF WAY
S/W	SIDEWALK
SLP	SEE LANDSCAPE PLANS
VC	VERTICAL CURB
TYP	TYPICAL

LEGEND:

SYMBOL	DESCRIPTION
	TURF BLOCKS WITH GRASS

PROJECT SITE PARKING COUNT:

PARKING STALLS (9'X18'):	165 STALLS
COMPACT PARKING STALLS (8'X16'):	151 STALLS
ADA PARKING STALLS (9'X18'):	9 STALLS (INCLUDING 1 VAN STALL)
EVCS PARKING STALLS (9'X18'):	32 STALLS (INCLUDING 2 ADA STALLS)
TOTAL PARKING STALLS	357 STALLS

NOTE:

BUILDING LAYOUT IS SHOWN FOR REFERENCE ONLY. REFER TO ARCHITECTURAL PLANS FOR ADDITIONAL INFORMATION.

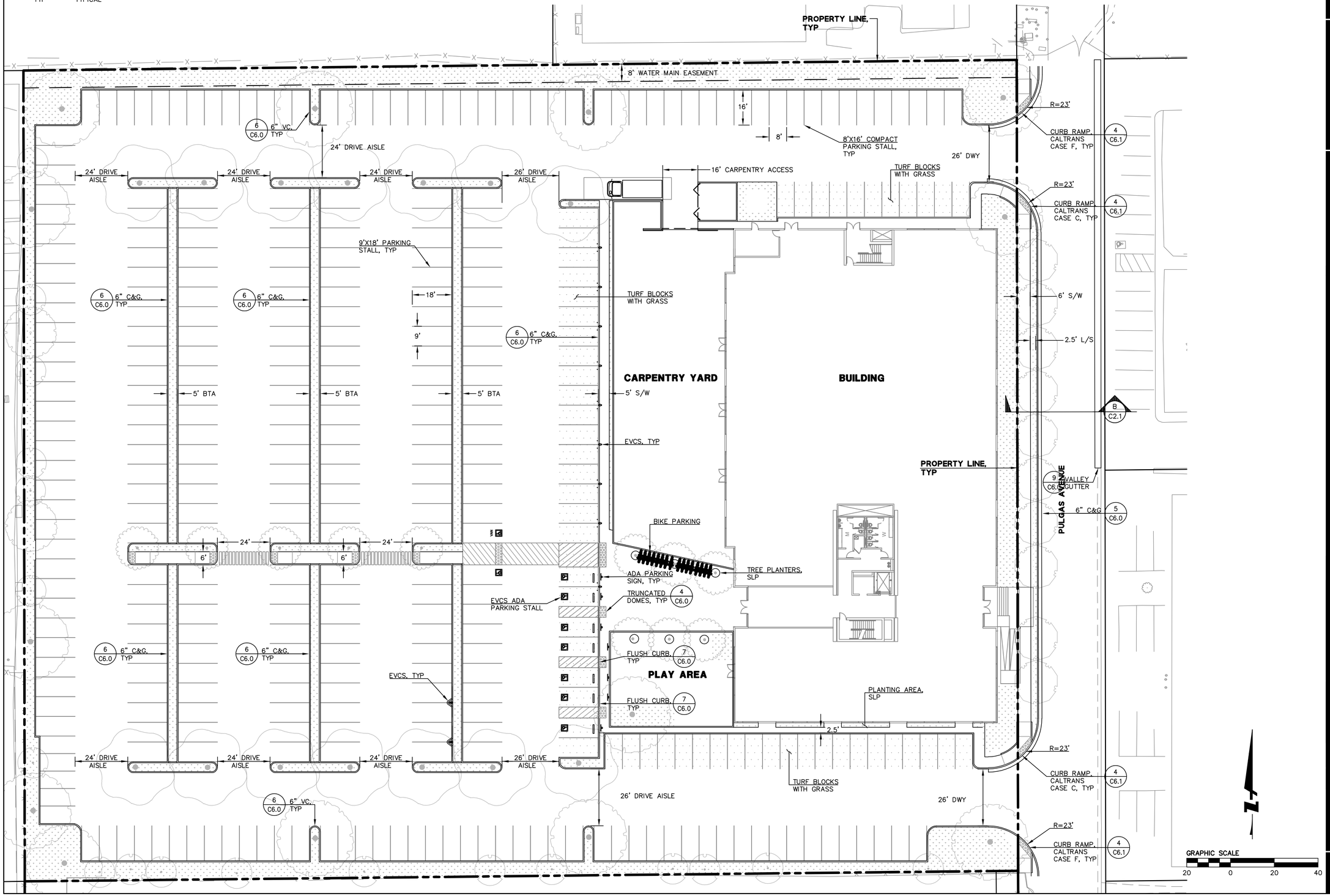

PROJECT

2535 PULGAS AVENUE
EAST PALO ALTO, CALIFORNIA

DESIGN ARCHITECTS

WM+P

WILLIAM McDONOUGH + PARTNERS
ARCHITECTURE AND COMMUNITY PLANNING

700 E. JEFFERSON ST.
CHARLOTTESVILLE, VA 22902
T 434.979.1111 F 434.979.1112
WWW.MCDONOUGHPARTNERS.COM

ENGINEER OF RECORD

BKF 100+ YEARS
ENGINEERS . SURVEYORS . PLANNERS

BKF ENGINEERS
255 SHORELINE DR, SUITE 200
REDWOOD CITY, CA 94065

CONSULTANTS

STATUS

ISSUE

MARK	DATE	DESCRIPTION

PROJECT NO:	2019-0112
DRAWN BY:	CLB
CHECK BY:	LKY

PLANNING SUBMITTAL
2020

SHEET TITLE / SHEET NUMBER

SITE PLAN

C2.0

NOT FOR CONSTRUCTION

ABBREVIATIONS:

SYMBOL	DESCRIPTION
APN	ASSESSOR'S PARCEL NUMBER
CL	CENTERLINE
PL	PROPERTY LINE
ROW	RIGHT OF WAY

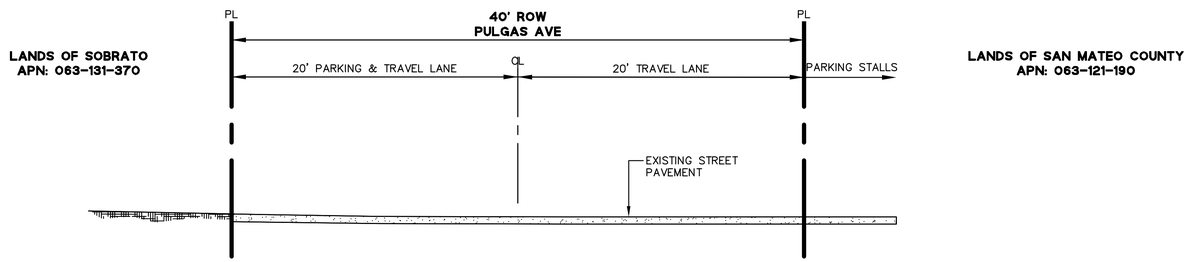

A – **EXISTING CONDITION – SECTION A**

NTS

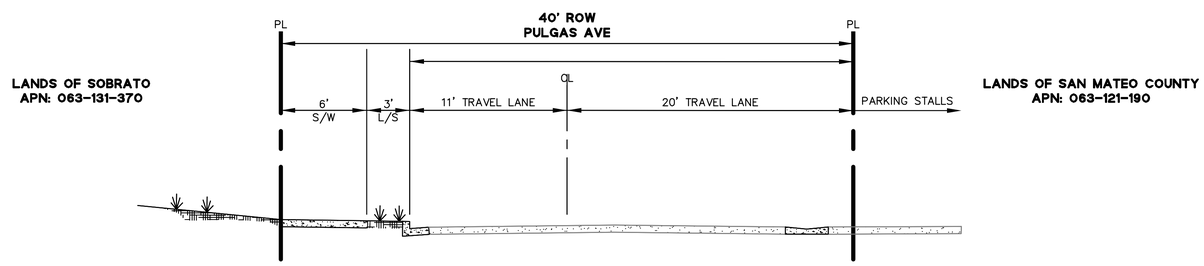

NOTES:
1. PROPOSED SECTION IS BASED ON THE RAVENSWOOD SPECIFIC PLAN FOR RAVENSWOOD CONNECTOR (PULGAS AVENUE).
2. SECTION SHOWN REFLECTS PROJECT PROVIDING THE ROADWAY DESIGN FOR PROJECT FRONTAGE.

B – **PROPOSED CONDITION – SECTION A**

NTS

PROJECT

2535 PULGAS AVENUE
EAST PALO ALTO, CALIFORNIA

DESIGN ARCHITECTS

WM+P

WILLIAM McDONOUGH + PARTNERS
ARCHITECTURE AND COMMUNITY PLANNING

700 E. JEFFERSON ST.
CHARLOTTESVILLE, VA 22902
T 434.979.1111 F 434.979.1112
WWW.MCDONOUGHPARTNERS.COM

ENGINEER OF RECORD

BkF 100+ YEARS
ENGINEERS . SURVEYORS . PLANNERS

BKF ENGINEERS
255 SHORELINE DR, SUITE 200
REDWOOD CITY, CA 94065

CONSULTANTS

STATUS

ISSUE

MARK	DATE	DESCRIPTION

PROJECT NO:	2019-0112
DRAWN BY:	CLB
CHECK BY:	LKY

PLANNING SUBMITTAL
2020

SHEET TITLE / SHEET NUMBER

CROSS SECTIONS

C2.1

NOT FOR CONSTRUCTION

ABBREVIATIONS:

SYMBOL	DESCRIPTION
EG	EXISTING GRADE
FG	FINISHED GRADE
MAX	MAXIMUM
MIN	MINIMUM

NOTES:

1. BUILDING LAYOUT IS SHOWN FOR REFERENCE ONLY. REFER TO ARCHITECTURAL PLANS FOR ADDITIONAL INFORMATION.
2. BASE FLOOD ELEVATION IS 11' PER FEMA AT LANDS OF TOUCHATT.

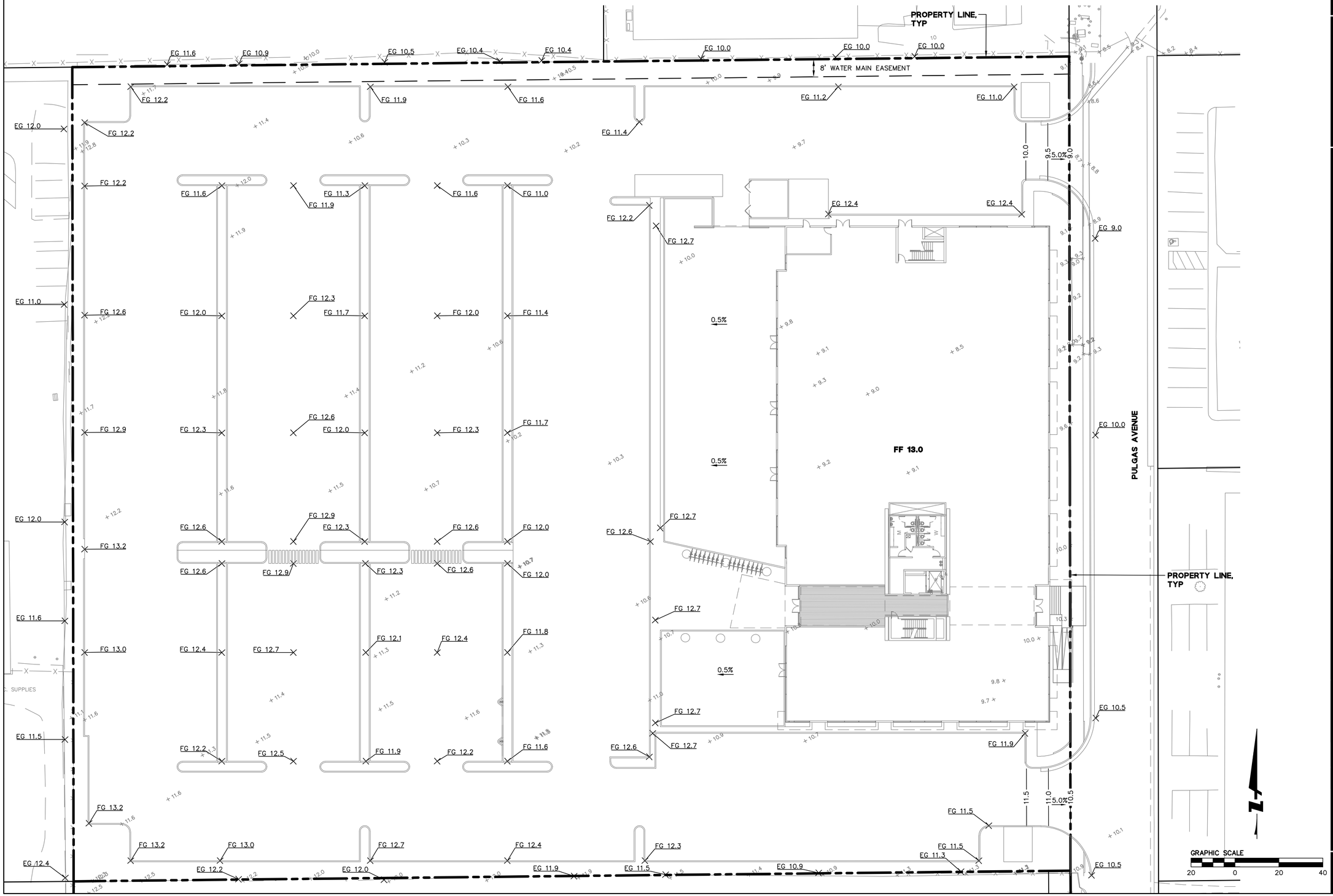

PROJECT

2535 PULGAS AVENUE
EAST PALO ALTO, CALIFORNIA

DESIGN ARCHITECTS

WM+P

WILLIAM McDONOUGH + PARTNERS
ARCHITECTURE AND COMMUNITY PLANNING

700 E. JEFFERSON ST.
CHARLOTTESVILLE, VA 22902
T 434.979.1111 F 434.979.1112
WWW.MCDONOUGHPARTNERS.COM

ENGINEER OF RECORD

BKF 100+ YEARS
ENGINEERS . SURVEYORS . PLANNERS

BKF ENGINEERS
255 SHORELINE DR, SUITE 200
REDWOOD CITY, CA 94065

CONSULTANTS

STATUS

ISSUE

ISSUE

MARK	DATE	DESCRIPTION

PROJECT NO:	2019-0112
DRAWN BY:	CLB
CHECK BY:	LKY

PLANNING SUBMITTAL
2020

SHEET TITLE / SHEET NUMBER

GRADING PLAN

C3.0

NOT FOR CONSTRUCTION

ABBREVIATIONS:

SYMBOL	DESCRIPTION
AD	AREA DRAIN
BFP	BACKFLOW PREVENTER
CIP	CAST-IRON-PIPE
DW	DOMESTIC WATER
EL	ELECTRICAL
EX	EXISTING
EVA	EMERGENCY VEHICLE ACCESS
FH	FIRE HYDRANT
FW	FIRE WATER
GV	GAS VALVE
HDPE	HIGH-DENSITY POLYETHLYENE
PERF	PERFORATED
PIV	PRESSURE INDUCING VALVE
POC	POINT OF CONNECTION
PR	PROPOSED
RP	REDUCED PRESSURE

SYMBOL	DESCRIPTION
SD	STORM DRAIN
SDCB	STORM DRAIN CATCH BASIN
SDCO	STORM DRAIN CLEANOUT
SDDI	STORM DRAIN DRAIN INLET
SDMH	STORM DRAIN MANHOLE
SS	SANITARY SEWER
SSCO	SANITARY SEWER CLEANOUT
SSMH	SANITARY SEWER MANHOLE
W	WATER
WM	WATER METER
WV	WATER VALVE

NOTES:

1. LOCATION AND LAYOUT OF GAS UTILITIES IS PRELIMINARY AND IS SHOWN FOR REFERENCE ONLY. DESIGN OF GAS UTILITIES IS TO BE DONE BY OTHERS.
2. LOCATION AND LAYOUT OF JOINT TRENCH IS PRELIMINARY AND IS SHOWN FOR REFERENCE ONLY. DESIGN OF JOINT TRENCH IS TO BE DONE BY OTHERS.
3. EASEMENTS TO BE PROVIDED BY SEPARATE INSTRUMENT AND ARE SHOWN FOR REFERENCE ONLY.
4. PROPOSED 12" CIP WATER IN PULGAS AVENUE IS BASED ON THE RAVENSWOOD SPECIFIC PLAN. FURTHER WATER DEMAND STUDIES WILL BE PERFORMED.
5. PROPOSED 18" HDPE STORM DRAIN IN PULGAS AVENUE IS SHOWN FOR PLANNING PURPOSES AND IS BASED ON THE BAY ROAD PHASE II/III IMPROVEMENT PLANS. FURTHER STORM DRAIN CAPACITY STUDIES WILL BE PERFORMED.
6. PROPOSED 8" HDPE SEWER IN PULGAS AVENUE IS SHOWN FOR PLANNING PURPOSES AND IS BASED ON THE RAVENSWOOD SPECIFIC PLAN. FURTHER SEWER CAPACITY STUDIES WILL BE PERFORMED.

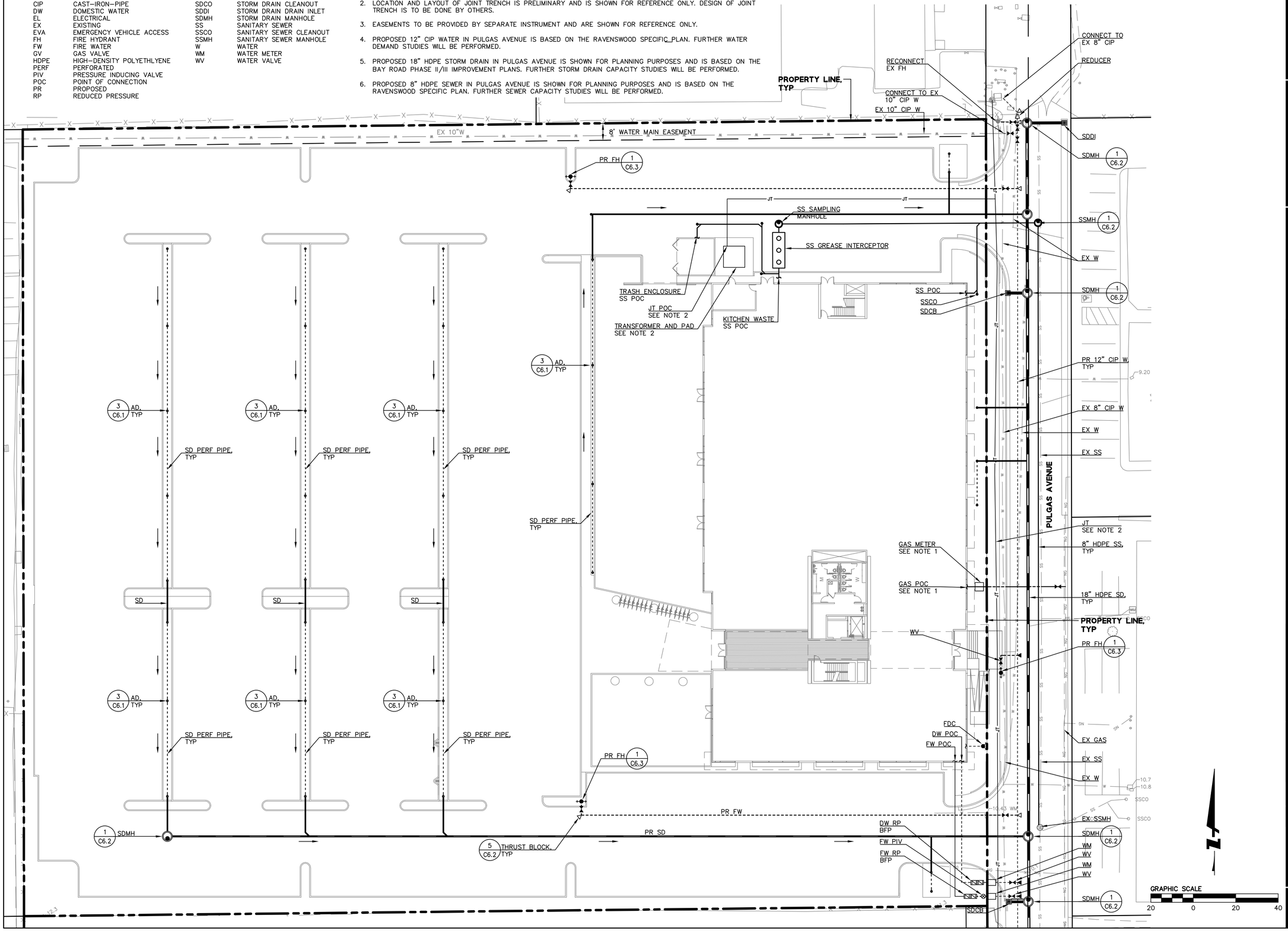

PROJECT

2535 PULGAS AVENUE
EAST PALO ALTO, CALIFORNIA

DESIGN ARCHITECTS

WM+P

WILLIAM McDONOUGH + PARTNERS
ARCHITECTURE AND COMMUNITY PLANNING

700 E. JEFFERSON ST.
CHARLOTTESVILLE, VA 22902
T 434.979.1111 F 434.979.1112
WWW.MCDONOUGHPARTNERS.COM

ENGINEER OF RECORD

BKF 100+ YEARS
ENGINEERS . SURVEYORS . PLANNERS

BKF ENGINEERS
255 SHORELINE DR, SUITE 200
REDWOOD CITY, CA 94065

CONSULTANTS

STATUS

ISSUE

MARK	DATE	DESCRIPTION

PROJECT NO:	2019-0112
DRAWN BY:	CLB
CHECK BY:	LKY

PLANNING SUBMITTAL
2020

SHEET TITLE / SHEET NUMBER

UTILITY PLAN

C4.0

NOT FOR CONSTRUCTION

CATCHMENT AREA IDENTIFIER/COLOR	SQ. FT.	NUMBER OF EVERGREEN TREES	NUMBER OF DECIDUOUS TREES	TREATMENT AREA IDENTIFIER/COLOR	SQ. FT.	TREATMENT AREA REQUIRED (4%) SQ. FT.	TREATMENT AREA REQUIRED (FVC) SQ. FT.	MEETS REQUIREMENT?
CA-1	30,950	–	–	TA-1	1,016	1,238	930	YES
CA-2	21,274	–	–	TA-2	1,016	851	638	YES
CA-3	24,533	–	–	TA-3	1,016	981	736	YES
CA-4	8,682	–	–	TA-4	288	347	260	YES
CA-5	9,860	3	1	TA-5	302	394	294	YES
CA-6	8,537	–	–	TA-6	257	342	255	YES
CA-7	18,457	–	–	TA-7	550	738	550	YES
CA-8	10,489	–	6	TA-8	317	420	313	YES

LEGEND:

SELF–TREATING AREA (LANDSCAPE)

INTERCEPTOR TREES – EVERGREEN

INTERCEPTOR TREES – DECIDUOUS

NOTES:

1. CATCHMENT AND TREATMENT SIZES, ELEVATIONS, AND LOCATIONS ARE PRELIMINARY AND SUBJECT TO FINAL ENGINEERING AND PLUMBING DESIGN.
2. ADJUSTED CATCHMENT AREA IS THE TOTAL CATCHMENT AREA REDUCED BY INTERCEPTOR TREE CREDITS (200 SQUARE FEET PER NEW EVERGREEN TREE). SITE DESIGN MEASURES PER 2016 SAN MATEO COUNTY C.3 STORMWATER TECHNICAL GUIDANCE, CHAPTER 4.

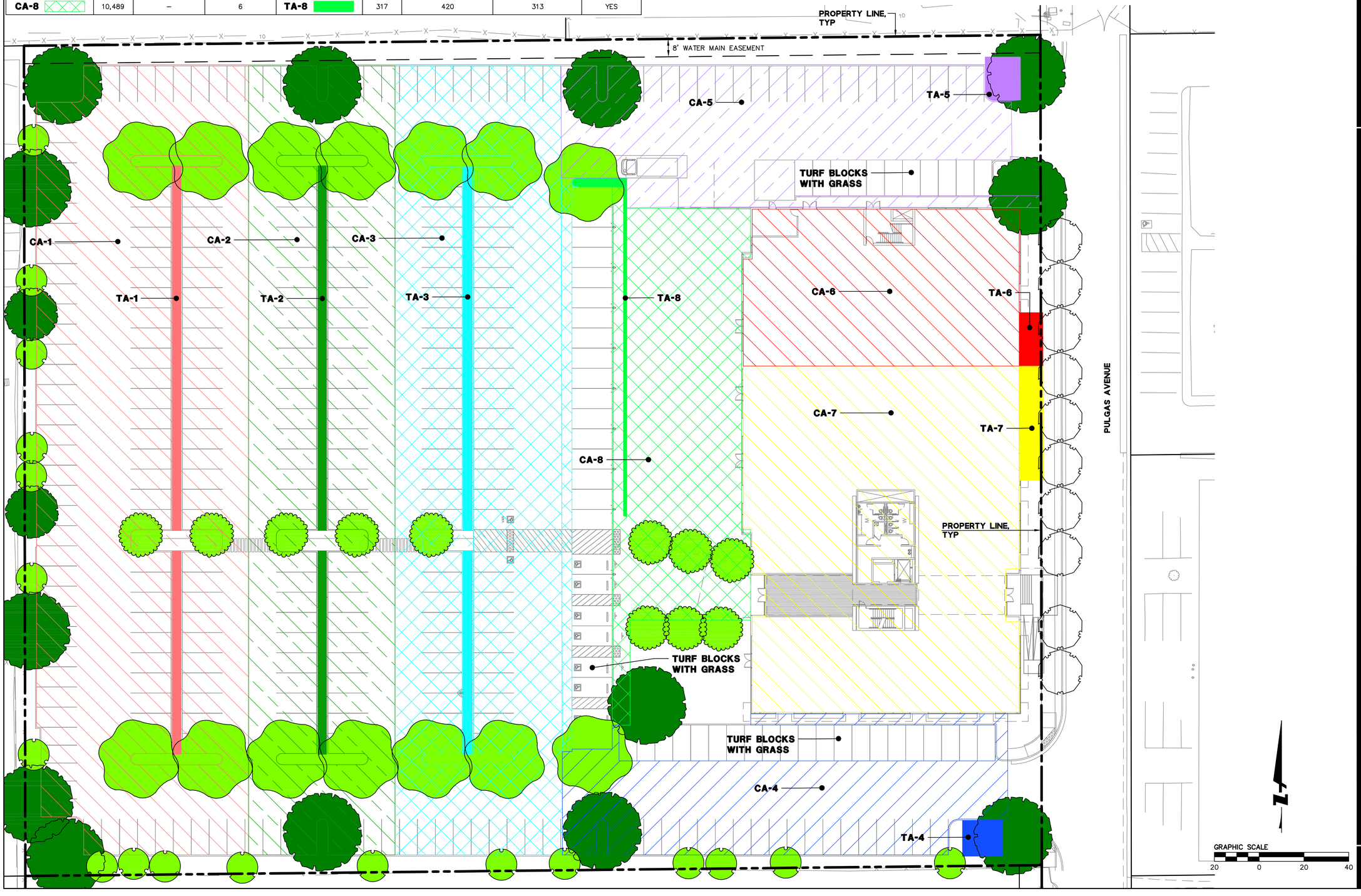

PROJECT

2535 PULGAS AVENUE
EAST PALO ALTO, CALIFORNIA

DESIGN ARCHITECTS

WM+P

WILLIAM McDONOUGH + PARTNERS
ARCHITECTURE AND COMMUNITY PLANNING

700 E. JEFFERSON ST.
CHARLOTTESVILLE, VA 22902
T 434.979.1111 F 434.979.1112
WWW.MCDONOUGHPARTNERS.COM

ENGINEER OF RECORD

BKF 100+ YEARS
ENGINEERS . SURVEYORS . PLANNERS

BKF ENGINEERS
255 SHORELINE DR, SUITE 200
REDWOOD CITY, CA 94065

CONSULTANTS

STATUS

ISSUE

ISSUE

MARK	DATE	DESCRIPTION

PROJECT NO: 2019-0112
DRAWN BY: CLB
CHECK BY: LKY

PLANNING SUBMITTAL
2020

SHEET TITLE / SHEET NUMBER

STORMWATER PLAN

C5.0

NOT FOR CONSTRUCTION

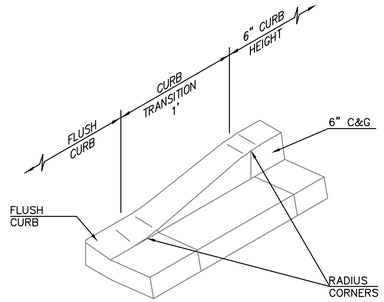

1 — 6" CURB TO FLUSH CURB TRANSITION
NTS

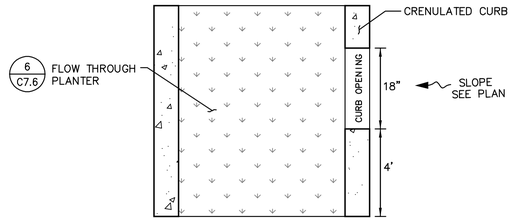

PLAN VIEW

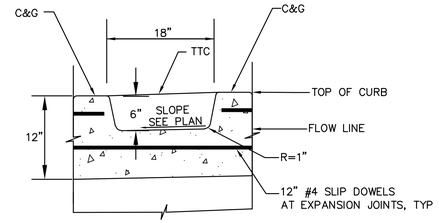

LONGITUDINAL SECTION

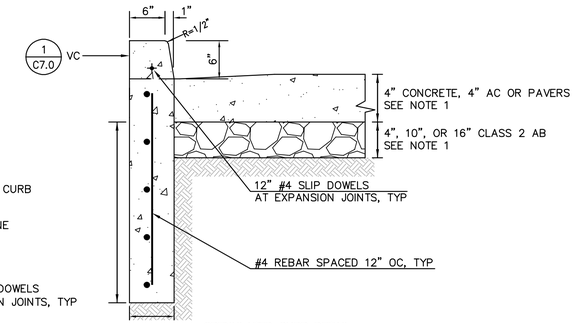

CRENULATED CURB DETAIL

NOTES:
1. THICKNESS OF SECTION ADJACENT TO CRENULATED CURB IS DEPENDENT ON LOCATION SHOWN ON PLANS. REFER TO C2.0 FOR LOCATION OF CRENULATED CURBS.

2 — CRENULATED CONCRETE CURB & GUTTER
NTS

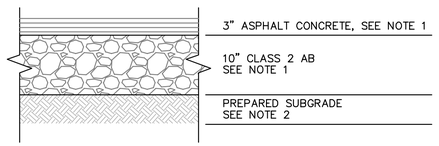

NOTES:
1. AC & AB THICKNESS CHOSEN PER GEOTECHNICAL REPORT BASED ON A TRAFFIC INDEX (TI) VALUE OF 5.
2. SUBGRADES TO BE COMPACTED AS RECOMMENDED IN THE GEOTECHNICAL REPORT. CONTRACTOR TO WORK WITH GEOTECHNICAL ENGINEER TO IDENTIFY AREAS OF ON-SITE EXPANSIVE SOILS PER THE GEOTECHNICAL REPORT.

3 — AC PAVEMENT SECTION - LIGHT
NTS

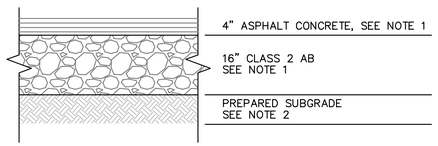

NOTES:
1. AC & AB THICKNESS CHOSEN PER GEOTECHNICAL REPORT BASED ON A TRAFFIC INDEX (TI) VALUE OF 7.
2. SUBGRADES TO BE COMPACTED AS RECOMMENDED IN THE GEOTECHNICAL REPORT. CONTRACTOR TO WORK WITH GEOTECHNICAL ENGINEER TO IDENTIFY AREAS OF ON-SITE EXPANSIVE SOILS PER THE GEOTECHNICAL REPORT.

4 — AC PAVEMENT SECTION - HEAVY
NTS

SAN MATEO COUNTY DEPARTMENT OF PUBLIC WORKS
REDWOOD CITY CALIFORNIA

DRAWN BY: D.P.
CHECK BY: J.A.L.
APPROVED BY: N.R.C.

SCALE: NONE
DATE: 6/95
REVISED: 4/97

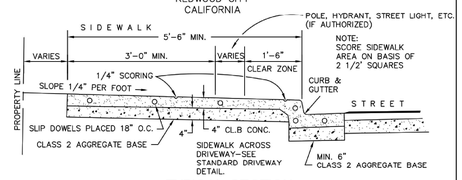

TYPICAL SECTION
URBAN CURB, GUTTER AND SIDEWALK

NOTE: OBSTRUCTIONS SUCH AS POLES, HYDRANTS, STREET SIGNS, UTILITY BOXES, STREET LIGHTS, ETC. SHALL BE LOCATED BEHIND THE SIDEWALK, UNLESS OTHERWISE SPECIFICALLY AUTHORIZED BY THE DIRECTOR OF PUBLIC WORKS. A CLEAR ZONE ALONG THE CURB AND SIDEWALK 18 INCHES IN WIDTH (MEASURED FROM THE FACE OF THE CURB) SHALL BE KEPT CLEAR AND OPEN FROM ALL OBSTRUCTIONS. IN ADDITION, AN AREA 3 FEET IN WIDTH ALONG THE SIDEWALK, EXCLUSIVE OF THE CURB WIDTH, SHALL BE KEPT CLEAR AND OPEN FROM ALL OBSTRUCTIONS IN COMPLIANCE WITH THE STATE BUILDING CODE (PART 2, TITLE 24, C.A.C.).

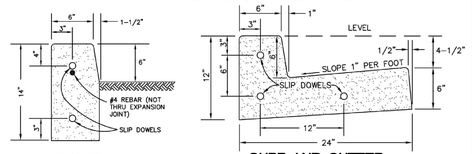

A1-6 CURB

CURB AND GUTTER

TYPICAL SECTIONS

NOTES:
1. ALL CONCRETE TO BE CLASS B CONCRETE.
2. MINIMUM SIDEWALK THICKNESS = 4 INCHES PCC.
3. PLACE 1/2" DIAMETER X 18" LONG DOWELS AT EXPANSION JOINTS AS SHOWN.
4. PLACE 1/2" THICK EXPANSION JOINTS FULL WIDTH 20' ON CENTER.
5. CONSTRUCT MONOLITHIC CURB, GUTTER AND SIDEWALK UNLESS OTHERWISE SPECIFICALLY AUTHORIZED BY THE DIRECTOR OF PUBLIC WORKS.
6. SUB-BASE MATERIALS WITHIN 30" OF SUBGRADE SHALL BE COMPACTED TO 95%.

D-3

5 — CURB & GUTTER - PULGAS AVE
NTS

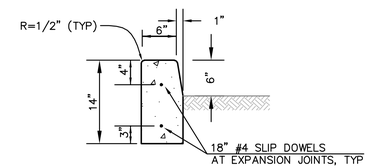

6 — VERTICAL CURB
NTS

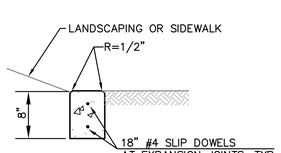

7 — FLUSH CURB
NTS

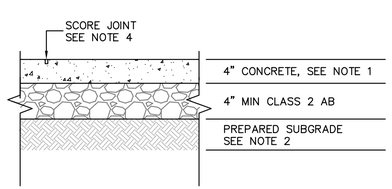

NOTES:
1. APPLY LIGHT BROOM FINISH. DESIGN COMPRESSIVE STRENGTH IS 3500 PSI.
2. SUBGRADES TO BE COMPACTED AS RECOMMENDED IN THE GEOTECHNICAL REPORT. CONTRACTOR TO WORK WITH GEOTECHNICAL ENGINEER TO IDENTIFY AREAS OF ON-SITE EXPANSIVE SOILS PER THE GEOTECHNICAL REPORT.
3. THIS SECTION TO BE USED IN LOCATIONS WHERE NEW CONCRETE FLATWORK IS REQUIRED FOR PEDESTRIAN TRAFFIC.
4. CONTROL JOINT SPACING SHOULD BE LIMITED TO A MAXIMUM OF 8 FEET IN EACH DIRECTION FOR EACH INCH OF CONCRETE THICKNESS.

8 — CONCRETE SIDEWALK SECTION
NTS

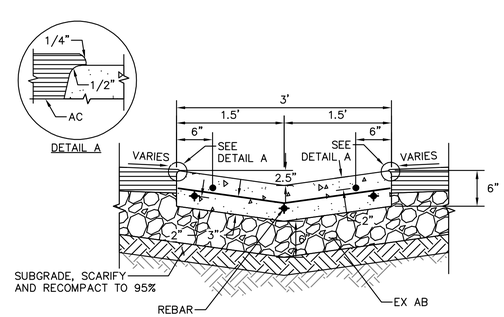

9 — 3' CONCRETE VALLEY GUTTER
NTS

PROJECT

2535 PULGAS AVENUE
EAST PALO ALTO, CALIFORNIA

DESIGN ARCHITECTS

WM+P

WILLIAM McDONOUGH + PARTNERS
ARCHITECTURE AND COMMUNITY PLANNING
700 E. JEFFERSON ST.
CHARLOTTESVILLE, VA 22902
T 434.979.1111 F 434.979.1112
WWW.MCDONOUGHPARTNERS.COM

ENGINEER OF RECORD

BKF 100+ YEARS
ENGINEERS . SURVEYORS . PLANNERS
BKF ENGINEERS
255 SHORELINE DR, SUITE 200
REDWOOD CITY, CA 94065

CONSULTANTS

STATUS

ISSUE

MARK	DATE	DESCRIPTION

PROJECT NO: 2019-0112
DRAWN BY: CLB
CHECK BY: LKY

PLANNING SUBMITTAL
2020

SHEET TITLE / SHEET NUMBER

DETAILS

C6.0

NOT FOR CONSTRUCTION

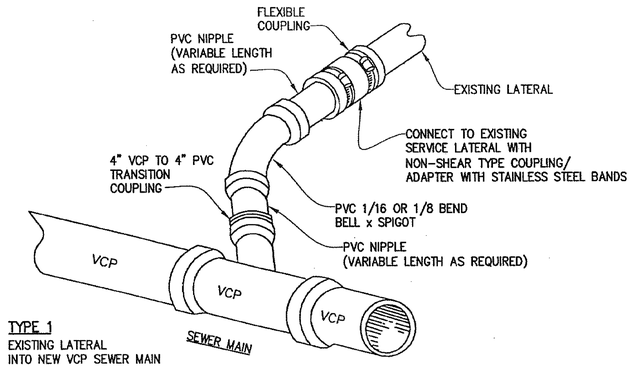

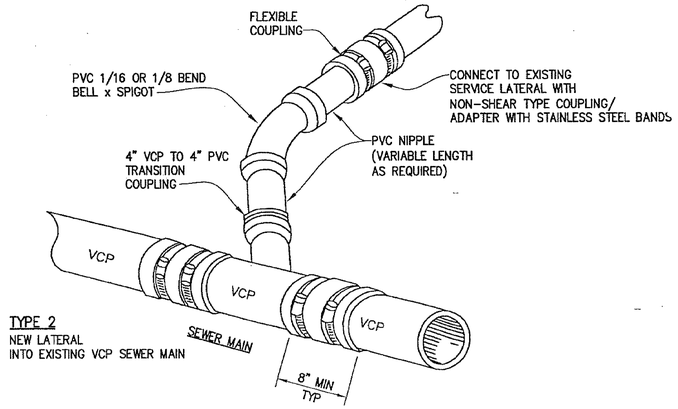

REVISED ..... MAY 2002 APPROVED BY: ..... DATE:.....	EAST PALO ALTO SANITARY DISTRICT STANDARD DETAIL LATERAL CONNECTION TO VCP MAIN - TYPE 1 & TYPE 2	STANDARD No. 10

1 TYPE 2-SANITARY SEWER LATERAL CONNECTION
NTS

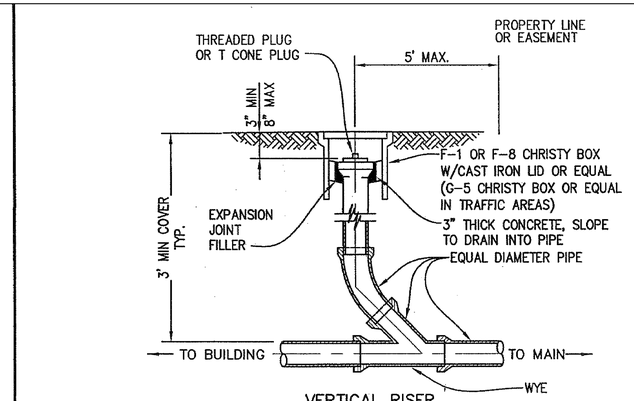

VERTICAL RISER

NOTES:
1. FOR COVER 3' AND GREATER, PIPE MATERIAL SHALL BE PVC, PSM SDR-26 OR HDPE SDR-17.
2. IF COVER IS LESS THAN 3', PIPE MATERIAL SHALL BE POLYETHELYNE WRAPPED DUCTILE IRON.
3. FOR NEW LATERAL AND MAIN LINE INSTALLATIONS, PIPE MATERIAL SHALL BE THE SAME AS MAIN LINE MATERIAL.

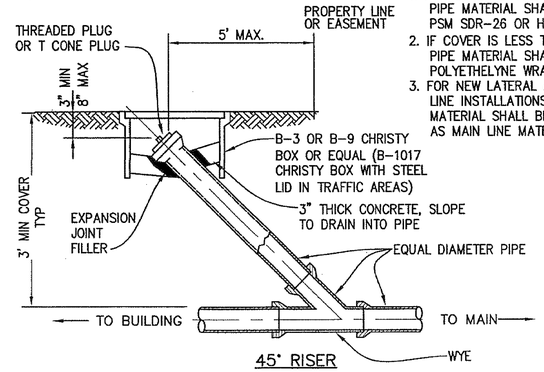

45° RISER

REVISED ..... MAY 2002 APPROVED BY: ..... DATE:.....	EAST PALO ALTO SANITARY DISTRICT STANDARD DETAIL TYPICAL SERVICE LATERAL CLEANOUT	STANDARD No. 13

2 SANITARY SEWER CLEANOUT
NTS

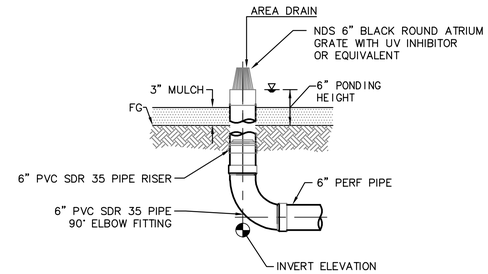

END CONDITION

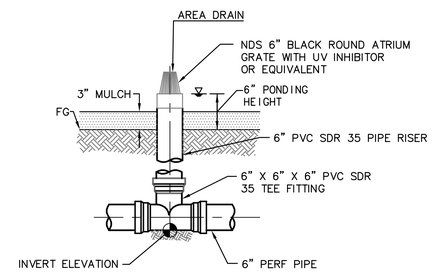

IN-LINE

NOTE:
SEE NDS DRAINAGE PRODUCTS CATALOG FOR INSTALLATION.

3 AREA DRAIN
NTS

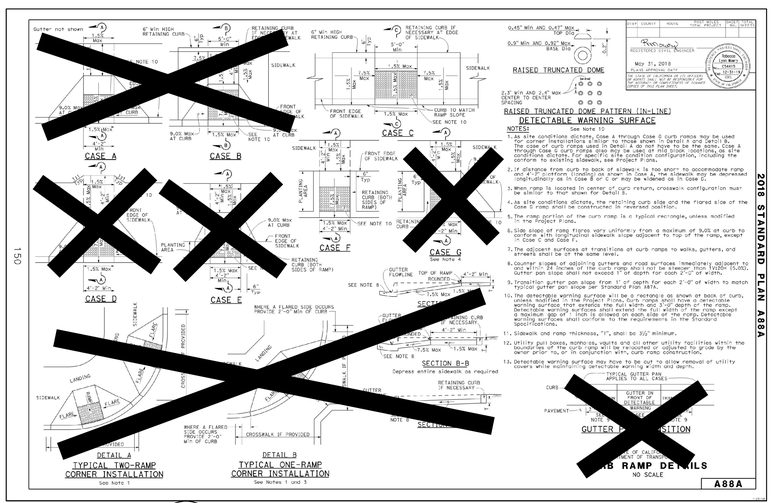

4 CALTRANS CURB RAMP DETAIL
NTS

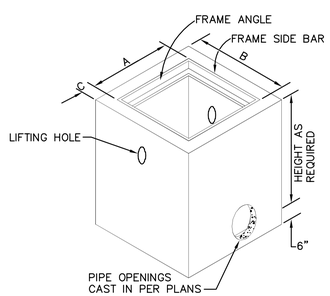

ISOMETRIC

SECTION

CATCH BASIN TABLE

MODEL	A	B	C
DI 1212	12	12	4

NOTES:
1. CATCH BASIN WILL BE JENSEN PRECAST OR EQUAL.
2. FRAMES AND GRATES WILL BE FOR PEDESTRIAN LOADING IN BIOTREATMENT AREAS. FRAMES AND GRATES WILL BE RATED FOR H20 LOADING ELSEWHERE.

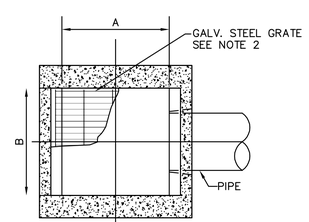

PLAN

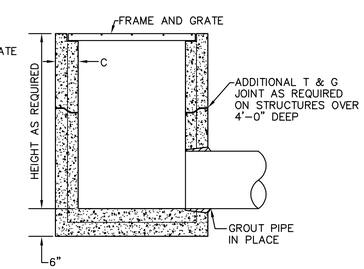

5 STORM DRAIN CATCH BASIN
NTS

PROJECT

2535 PULGAS AVENUE
EAST PALO ALTO, CALIFORNIA

DESIGN ARCHITECTS

WM+P
WILLIAM McDONOUGH + PARTNERS
ARCHITECTURE AND COMMUNITY PLANNING
700 E. JEFFERSON ST.
CHARLOTTESVILLE, VA 22902
T 434.979.1111 F 434.979.1112
WWW.MCDONOUGHPARTNERS.COM

ENGINEER OF RECORD

BKF 100+ YEARS
ENGINEERS . SURVEYORS . PLANNERS
BKF ENGINEERS
255 SHORELINE DR, SUITE 200
REDWOOD CITY, CA 94065

CONSULTANTS

STATUS

ISSUE

MARK	DATE	DESCRIPTION

PROJECT NO: 2019-0112
DRAWN BY: CLB
CHECK BY: LKY

PLANNING SUBMITTAL
2020

SHEET TITLE / SHEET NUMBER

DETAILS

C6.1

NOT FOR CONSTRUCTION

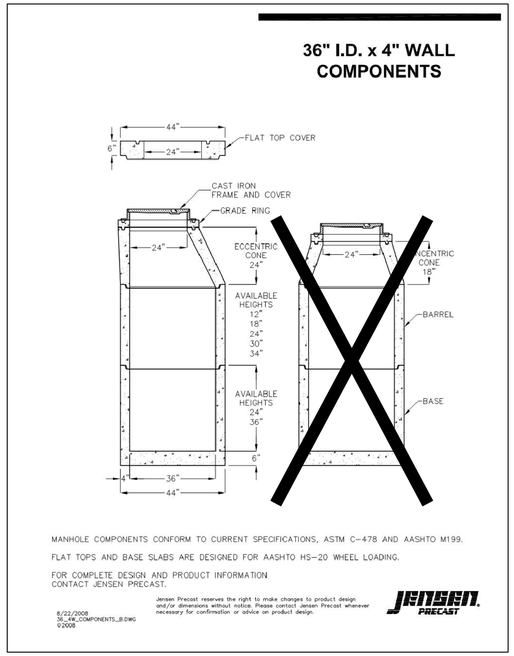

1 MANHOLE
NTS

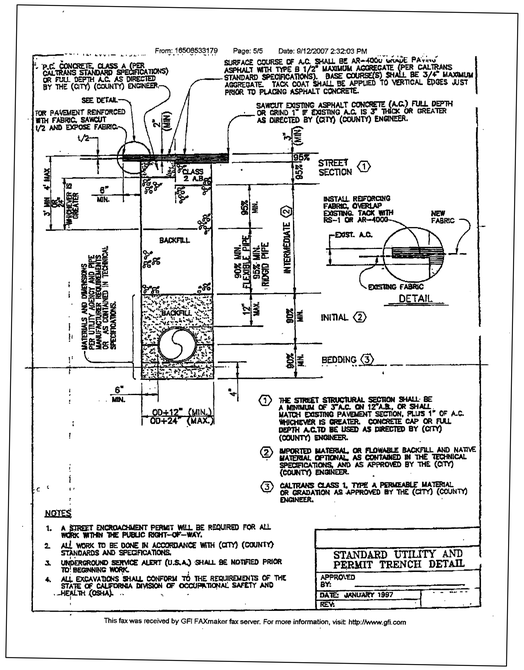

2 STANDARD UTILITY AND PERMIT TRENCH
NTS

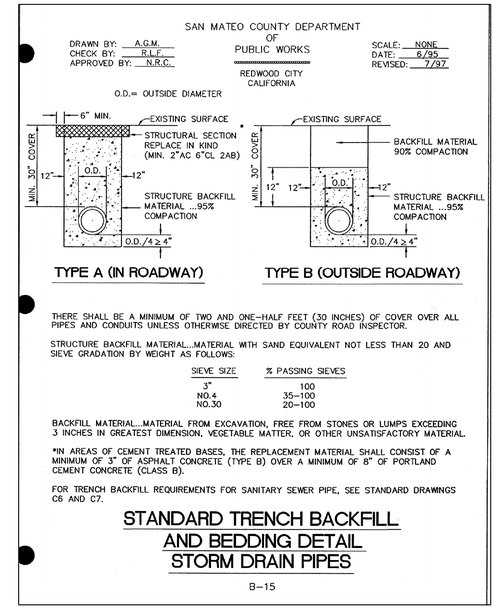

3 STANDARD TRENCH BACKFILL AND BEDDING FOR STORM DRAIN PIPES
NTS

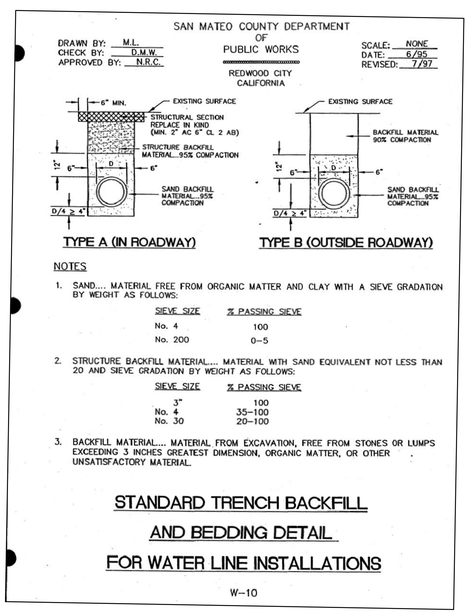

4 TRENCH BACKFILL FOR WATER LINES
NTS

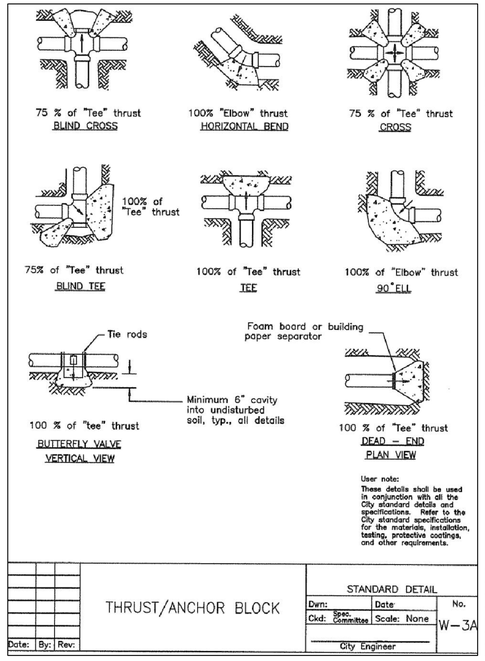

5 THRUST/ANCHOR BLOCK
NTS

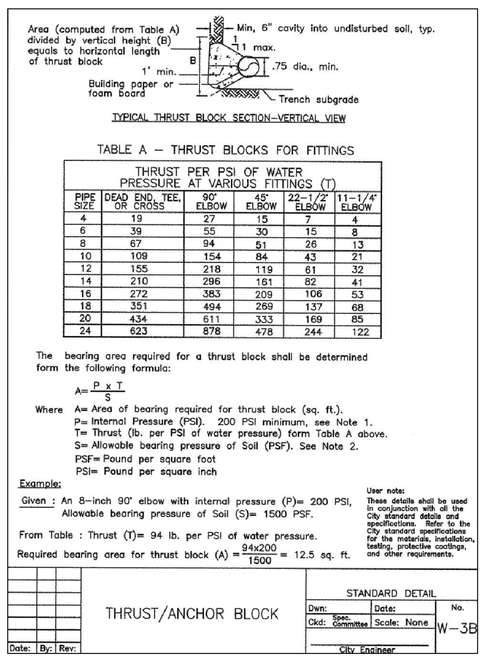

6 TYPICAL WATER MAIN CONNECTION
NTS

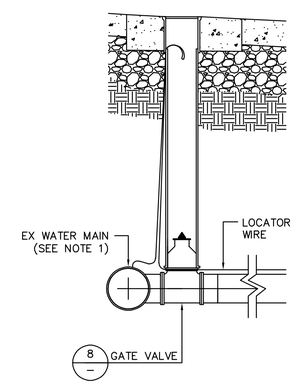

NOTE:
NO DIRECT TAP. SERVICE CONNECTION SHALL BE HOT TAP 1. ONLY. TAPPING SLEEVE TO BE MECHANICAL JOINT TYPE OR ALL STAINLESS STEEL CIRCUMFERENCE SEAL TYPE WITH STAINLESS STEEL FLANGE. BOLTS AND NUTS PER AMERICAN WATER STANDARDS.

PROJECT

2535 PULGAS AVENUE
EAST PALO ALTO, CALIFORNIA

DESIGN ARCHITECTS

WM+P
WILLIAM McDONOUGH + PARTNERS
ARCHITECTURE AND COMMUNITY PLANNING
700 E. JEFFERSON ST.
CHARLOTTESVILLE, VA 22902
T 434.979.1111 F 434.979.1112
WWW.MCDONOUGHPARTNERS.COM

ENGINEER OF RECORD

BKF 100+ YEARS
ENGINEERS . SURVEYORS . PLANNERS
BKF ENGINEERS
255 SHORELINE DR, SUITE 200
REDWOOD CITY, CA 94065

CONSULTANTS

STATUS

ISSUE

MARK	DATE	DESCRIPTION

PROJECT NO: 2019-0112
DRAWN BY: CLB
CHECK BY: LKY

PLANNING SUBMITTAL
2020

SHEET TITLE / SHEET NUMBER

DETAILS

C6.2

NOT FOR CONSTRUCTION

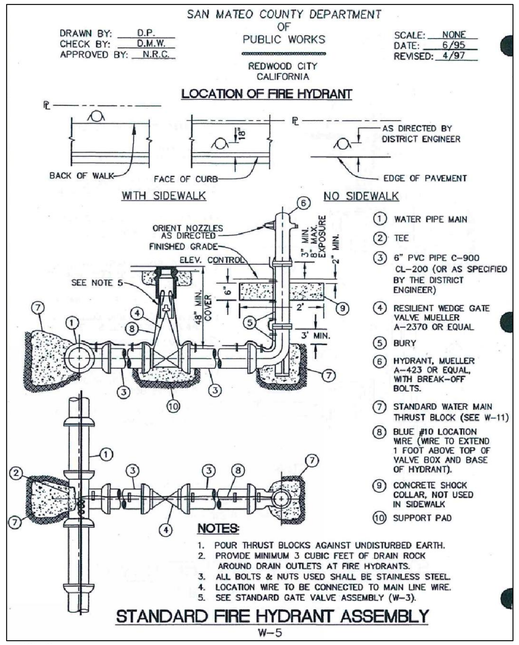

NOTES:

ALL FIRE HYDRANTS SHALL BE WET BARREL STANDARD STEAMER TYPE WITH 1-4 1/2" (114.3MM) AND 2-2 1/2" (63.5MM) OUTLETS. MPFPD CFC SEC. 507.5.1 APPENDIX C.

1 / – **FIRE HYDRANT ASSEMBLY**
NTS

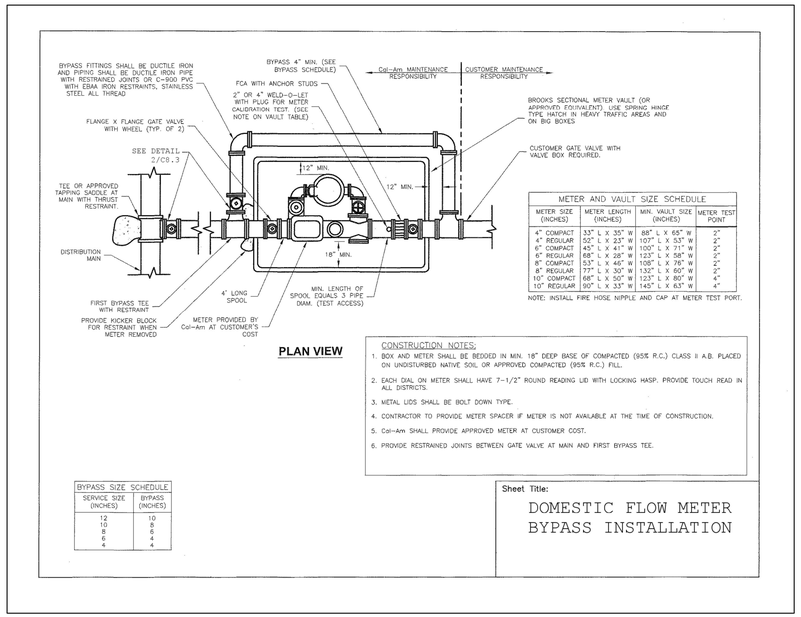

METER AND VAULT SIZE SCHEDULE

METER SIZE (INCHES)	METER LENGTH (INCHES)	MIN. VAULT SIZE (INCHES)	METER TEST POINT
4" COMPACT	33" L X 35" W	88" L X 65" W	2"
4" REGULAR	52" L X 23" W	107" L X 53" W	2"
6" COMPACT	45" L X 41" W	100" L X 71" W	2"
6" REGULAR	68" L X 28" W	123" L X 58" W	2"
8" COMPACT	53" L X 46" W	108" L X 76" W	2"
8" REGULAR	77" L X 30" W	132" L X 60" W	2"
10" COMPACT	68" L X 50" W	123" L X 80" W	4"
10" REGULAR	90" L X 33" W	145" L X 63" W	4"

NOTE: INSTALL FIRE HOSE NIPPLE AND CAP AT METER TEST PORT.

BYPASS SIZE SCHEDULE

SERVICE SIZE (INCHES)	BYPASS (INCHES)
12	10
10	8
8	6
6	4
4	4

2 / – **WATER METER VAULT**
NTS

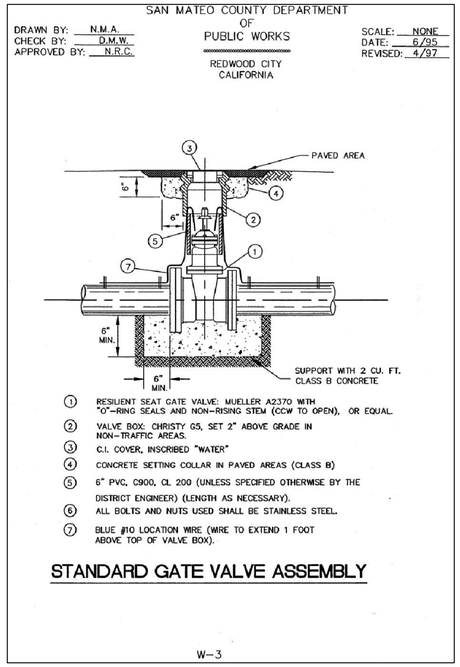

3 / – **GATE VALVE AND BOX**
NTS

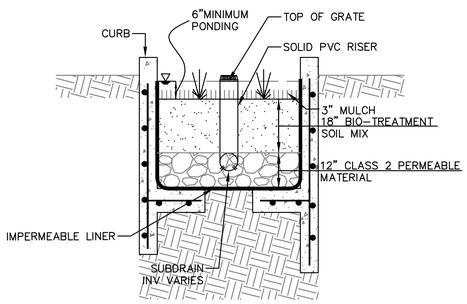

4 / – **TREATMENT AREA 1, 2, 3**
SCALE: 1" = 2'

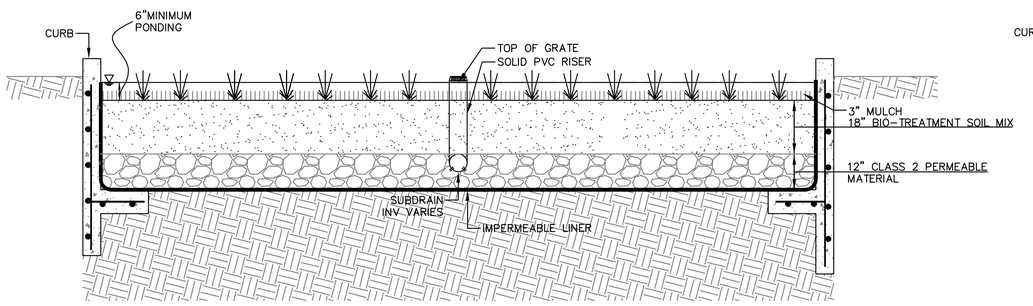

5 / – **TREATMENT AREA 4,5**
SCALE: 1" = 2'

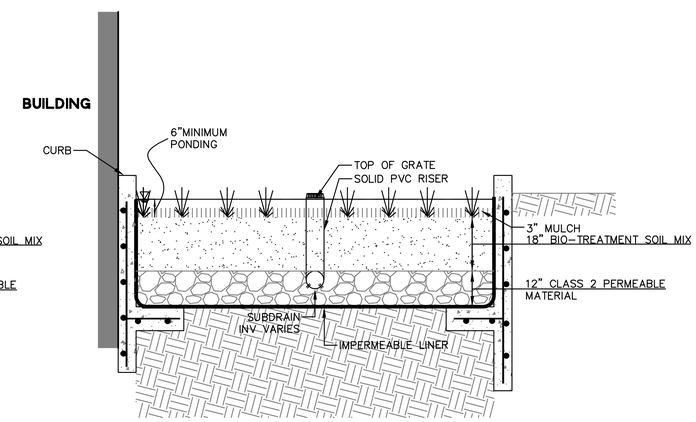

6 / – **TREATMENT AREA 6,7**
SCALE: 1" = 2'

PROJECT

2535 PULGAS AVENUE
EAST PALO ALTO, CALIFORNIA

DESIGN ARCHITECTS

WM+P

WILLIAM McDONOUGH + PARTNERS
ARCHITECTURE AND COMMUNITY PLANNING
700 E. JEFFERSON ST.
CHARLOTTESVILLE, VA 22902
T 434.979.1111 F 434.979.1112
WWW.MCDONOUGHPARTNERS.COM

ENGINEER OF RECORD

BKF 100+ YEARS
ENGINEERS . SURVEYORS . PLANNERS
BKF ENGINEERS
255 SHORELINE DR, SUITE 200
REDWOOD CITY, CA 94065

CONSULTANTS

STATUS

ISSUE

MARK	DATE	DESCRIPTION

PROJECT NO: 2019-0112
DRAWN BY: CLB
CHECK BY: LKY

PLANNING SUBMITTAL
2020

SHEET TITLE / SHEET NUMBER

DETAILS

C6.3

NOT FOR CONSTRUCTION

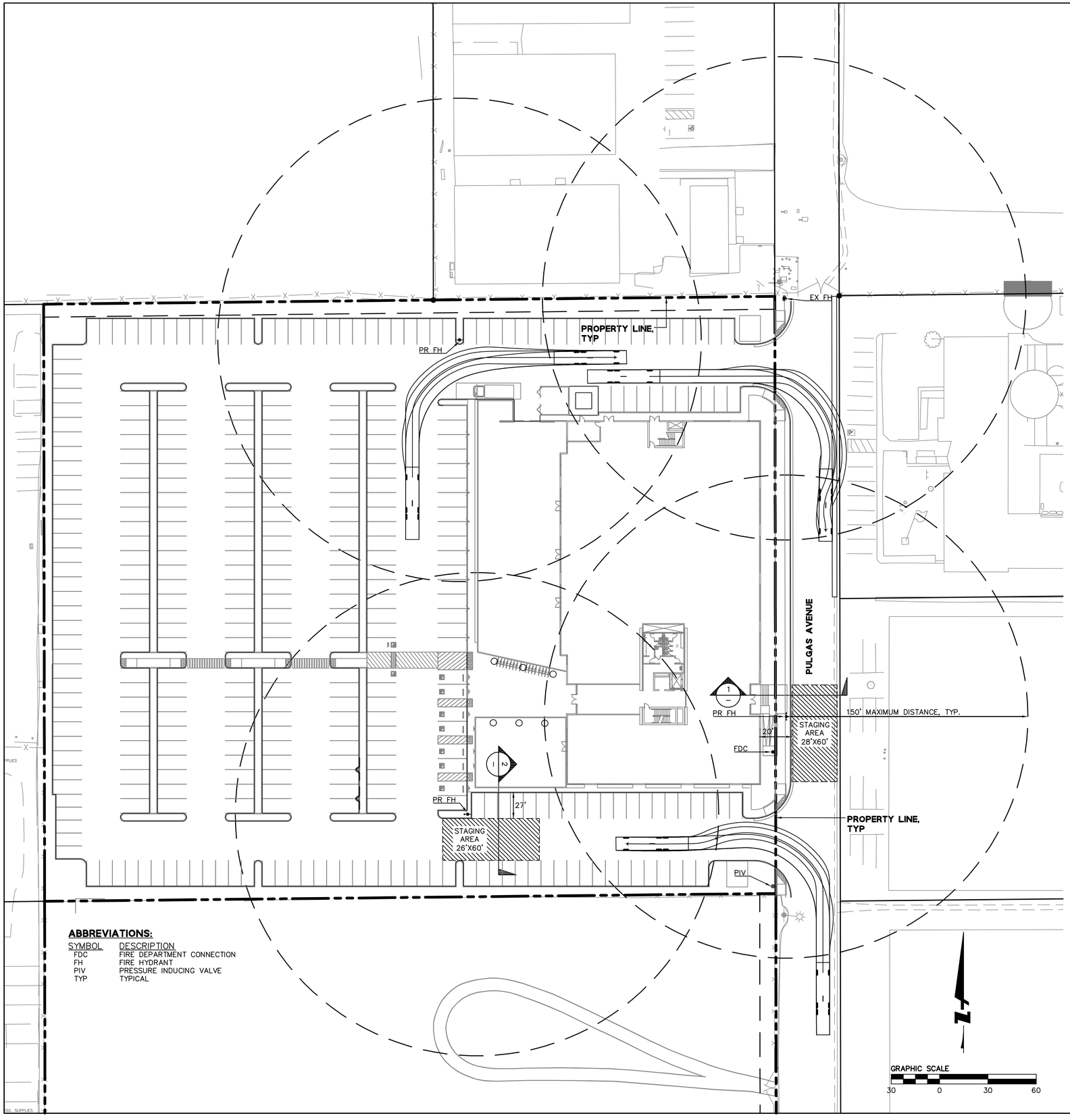

ABBREVIATIONS:

SYMBOL	DESCRIPTION
FDC	FIRE DEPARTMENT CONNECTION
FH	FIRE HYDRANT
PIV	PRESSURE INDUCING VALVE
TYP	TYPICAL

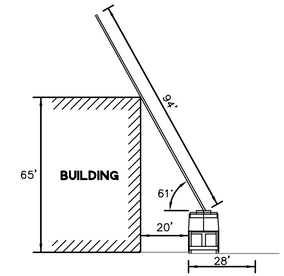

NOTE:
1. MAXIMUM CLIMBING ANGLE IS 75 DEGREES.

1 / – **PULGAS AVENUE FIRE STAGING**
NTS

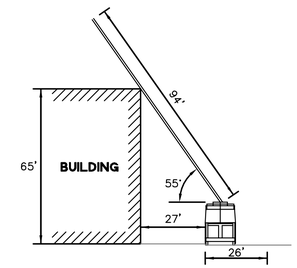

NOTE:
1. MAXIMUM CLIMBING ANGLE IS 75 DEGREES.

2 / – **ONSITE FIRE STAGING**
NTS

NOTES:

1. ON-SITE WIDTH FOR AERIAL LADDER TRUCK SHALL BE 26 FEET. THE SET UP AREAS SHALL BE A MAXIMUM OF 30 FEET FROM THE BUILDINGS AND NO CLOSER THAN 15 FEET TO THE BUILDING.
2. ALL PUBLIC AND ON-SITE CURBS TO BE PAINTED, LETTERED, AND SIGNED AS FIRE LANES, FIRE ACCESS, AND AERIAL LADDER TRUCK ACCESS FOR RESCUE AND FIREFIGHTING OPERATIONS.
3. SPACING FOR FIRE HYDRANTS IS 300 FEET. THE MINIMUM ACCEPTED MENLO PARK FIRE DISTRICT FIRE FLOW IS 3250 GPM AT 20 PSI RESIDUAL PRESSURE AT A 3 HOUR FLOW DURATION.
4. ALL PUBLIC STREETS WHERE STREET WIDTHS ARE LESS THAN 26 FEET TO HAVE NO PARKING AND RED CURBS, ALL STREETS LESS THAN 32 FEET AND MORE THAN 26 FEET MAY HAVE PARKING ON ONE SIDE AND RED CURBS ON THE OTHER, STREETS 36 FEET OR GREATER MAY HAVE PARKING ON BOTH SIDES.
5. FIRE LANES/EMERGENCY VEHICLE ACCESS TO HAVE RED PAINTED CURBS, CURB LETTERING AND POSTED SIGNS AS REQUIRED BY THE CVC, CFC AND MPFPD.
6. ALL TURNING RADII TO BE CAPABLE OF A SINGLE INLINE VEHICLE OF 42 FEET IN LENGTH MAKING ALL TURNING MANEUVERS.
7. FIRE HYDRANTS AND FIRE APPLIANCES (FIRE DEPARTMENT CONNECTIONS AND POST INDICATOR VALVES) TO BE CLEARLY ACCESSIBLE AND FREE FROM OBSTRUCTION.
8. FIRE HYDRANT TO BE WET BARREL STANDARD STEAMER TYPE WITH ONE 4 $\frac{1}{2}$" AND TWO 2 $\frac{1}{2}$" OUTLETS (MPFPD CFC SEC. 507.5.1 APPENDIX C).
9. DISCHARGE FIRE SPRINKLER TEST WATER TO ONSITE VEGETATED AREAS, OR TO THE SANITARY SEWER SYSTEM SUBJECT TO THE LOCAL SANITARY SEWER AGENCY'S AUTHORITY AND STANDARDS.

PROJECT

2535 PULGAS AVENUE
EAST PALO ALTO, CALIFORNIA

DESIGN ARCHITECTS

WM+P

WILLIAM McDONOUGH + PARTNERS
ARCHITECTURE AND COMMUNITY PLANNING
700 E. JEFFERSON ST.
CHARLOTTESVILLE, VA 22902
T 434.979.1111 F 434.979.1112
WWW.MCDONOUGHPARTNERS.COM

ENGINEER OF RECORD

BKF 100+ YEARS
ENGINEERS . SURVEYORS . PLANNERS
BKF ENGINEERS
255 SHORELINE DR, SUITE 200
REDWOOD CITY, CA 94065

CONSULTANTS

STATUS

ISSUE

MARK	DATE	DESCRIPTION

PROJECT NO:	2019-0112
DRAWN BY:	CLB
CHECK BY:	LKY

PLANNING SUBMITTAL
2020

SHEET TITLE / SHEET NUMBER

FIRE DEPARTMENT ACCESS PLAN

C7.0

NOT FOR CONSTRUCTION

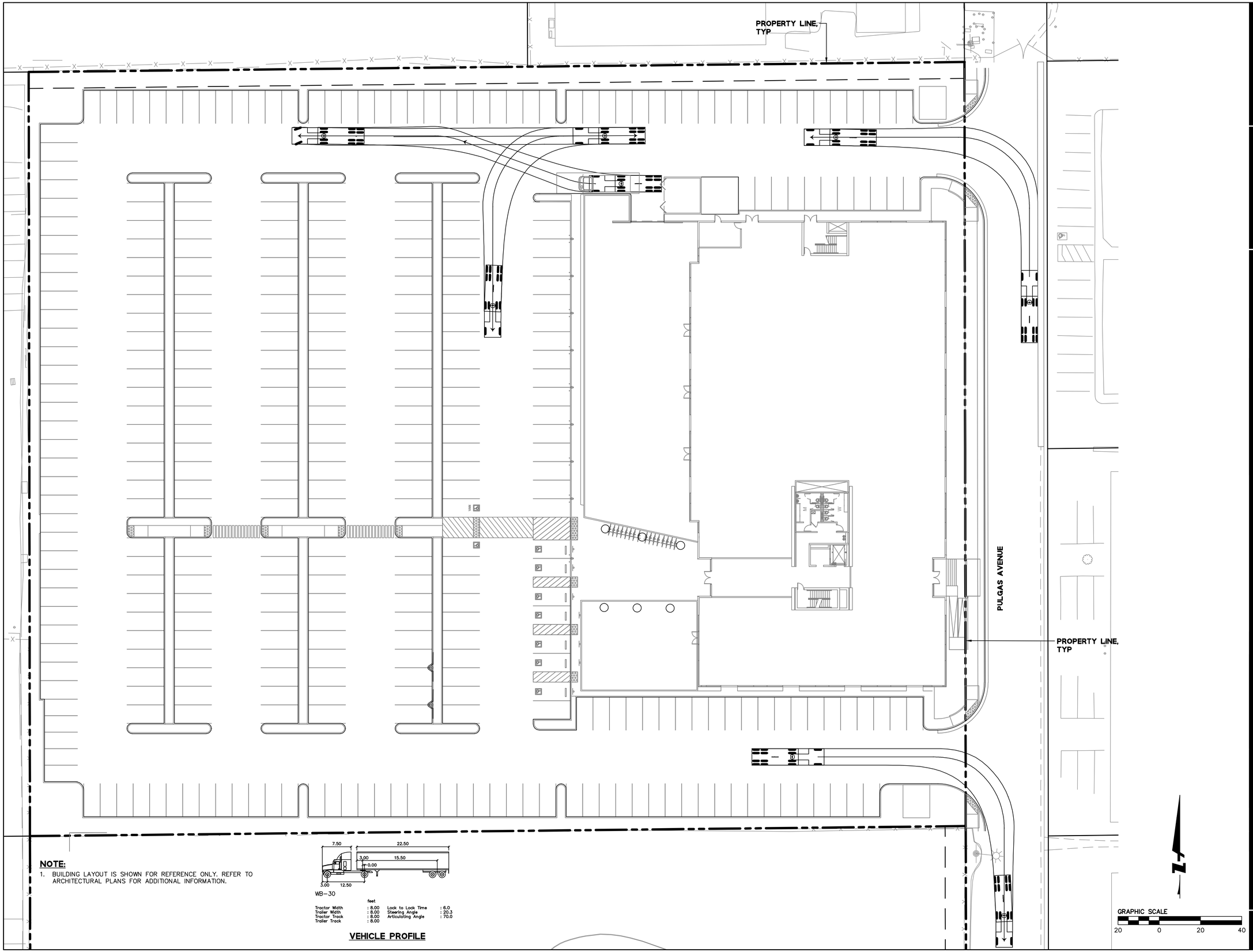

NOTE:

1. BUILDING LAYOUT IS SHOWN FOR REFERENCE ONLY. REFER TO ARCHITECTURAL PLANS FOR ADDITIONAL INFORMATION.

WB-30

feet

Tractor Width	: 8.00	Lock to Lock Time	: 6.0
Trailer Width	: 8.00	Steering Angle	: 20.3
Tractor Track	: 8.00	Articulating Angle	: 70.0
Trailer Track	: 8.00		

VEHICLE PROFILE

PROJECT

2535 PULGAS AVENUE
EAST PALO ALTO, CALIFORNIA

DESIGN ARCHITECTS

WM+P

WILLIAM McDONOUGH + PARTNERS
ARCHITECTURE AND COMMUNITY PLANNING

700 E. JEFFERSON ST.
CHARLOTTESVILLE, VA 22902
T 434.979.1111 F 434.979.1112
WWW.MCDONOUGHPARTNERS.COM

ENGINEER OF RECORD

BKF 100+ YEARS
ENGINEERS . SURVEYORS . PLANNERS

BKF ENGINEERS
255 SHORELINE DR, SUITE 200
REDWOOD CITY, CA 94065

CONSULTANTS

STATUS

ISSUE

ISSUE

MARK	DATE	DESCRIPTION

PROJECT NO:	2019-0112
DRAWN BY:	CLB
CHECK BY:	LKY

PLANNING SUBMITTAL
2020

SHEET TITLE / SHEET NUMBER

DELIVERY TRUCK ACCESS PLAN

C8.0

NOT FOR CONSTRUCTION