Dist	COUNTY	ROUTE	POST MILES TOTAL PROJECT	SHEET No.	TOTAL SHEETS
04	SM	101	0.8/1.1	1	136

STATE OF CALIFORNIA
DEPARTMENT OF TRANSPORTATION

PROJECT PLANS FOR CONSTRUCTION ON
STATE HIGHWAY AND CITY STREETS
IN SAN MATEO COUNTY
IN EAST PALO ALTO
FROM 0.2 MILE NORTH TO 0.1 MILE SOUTH OF UNIVERSITY AVENUE OVERCROSSING

TO BE SUPPLEMENTED BY STANDARD PLANS DATED 2018

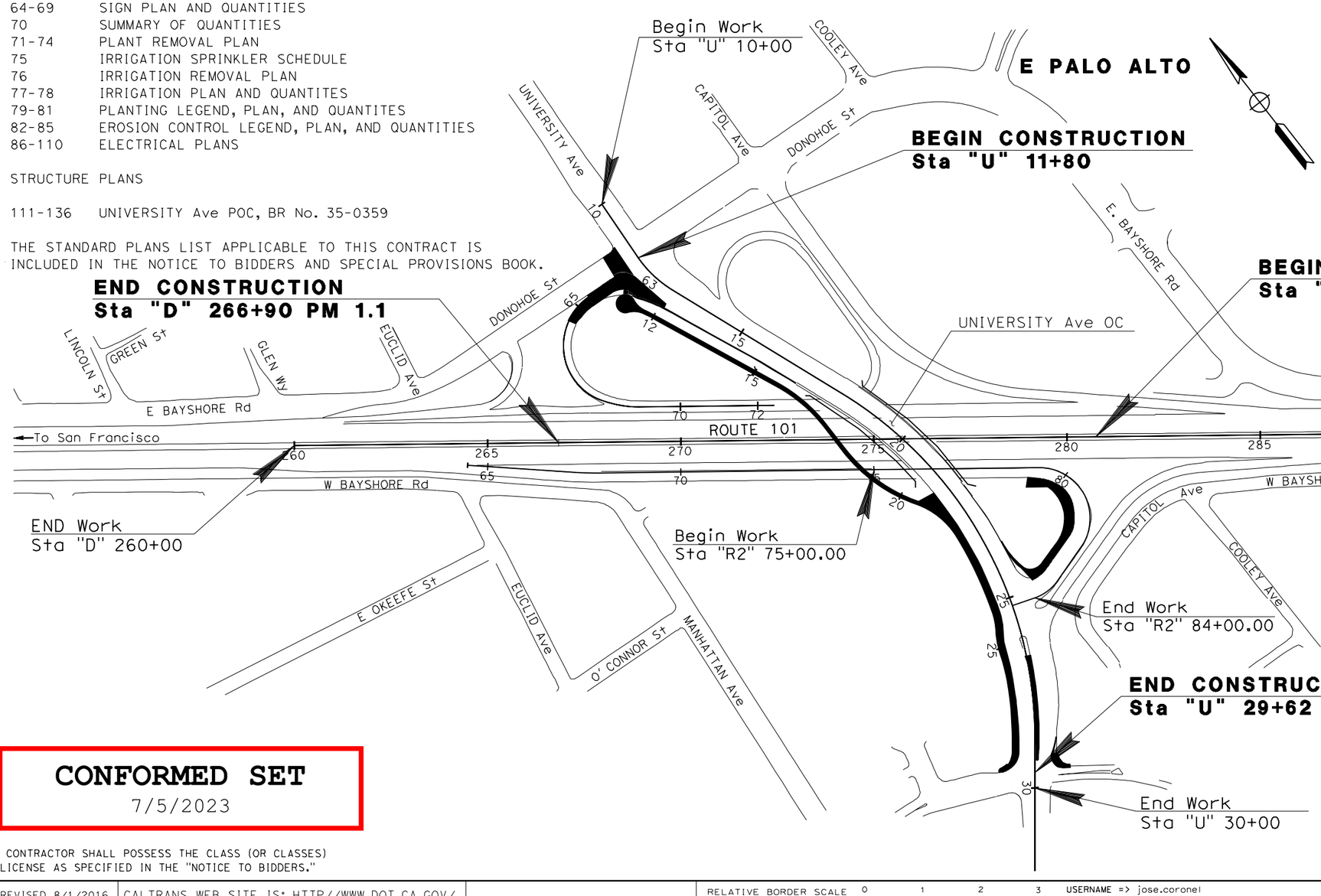

INDEX OF PLANS

SHEET No.	DESCRIPTION
1	TITLE AND LOCATION MAP
2	TYPICAL CROSS SECTIONS
3	KEY MAP AND LINE INDEX
4	PROJECT CONTROL
5-7	LAYOUTS
8-9	PROFILES AND SUPERELEVATION DIAGRAMS
10-22	CONSTRUCTION DETAILS
23-26	TEMPORARY WATER POLLUTION CONTROL PLAN AND QUANTITIES
27-28	CONTOUR GRADING
29-36	DRAINAGE PLAN, PROFILES, DETAILS AND QUANTITIES
37-39	UTILITY PLAN
40-41	CONSTRUCTION AREA SIGNS AND QUANTITIES
42-46	MOTORIST INFORMATION PLAN AND QUANTITIES
47-57	STAGE CONSTRUCTION AND TRAFFIC HANDLING PLAN AND QUANTITIES
58-63	PAVEMENT DELINEATION PLAN AND QUANTITIES
64-69	SIGN PLAN AND QUANTITIES
70	SUMMARY OF QUANTITIES
71-74	PLANT REMOVAL PLAN
75	IRRIGATION SPRINKLER SCHEDULE
76	IRRIGATION REMOVAL PLAN
77-78	IRRIGATION PLAN AND QUANTITES
79-81	PLANTING LEGEND, PLAN, AND QUANTITES
82-85	EROSION CONTROL LEGEND, PLAN, AND QUANTITIES
86-110	ELECTRICAL PLANS
	STRUCTURE PLANS
111-136	UNIVERSITY Ave POC, BR No. 35-0359

THE STANDARD PLANS LIST APPLICABLE TO THIS CONTRACT IS INCLUDED IN THE NOTICE TO BIDDERS AND SPECIAL PROVISIONS BOOK.

CONFORMED SET
7/5/2023

THE CONTRACTOR SHALL POSSESS THE CLASS (OR CLASSES) OF LICENSE AS SPECIFIED IN THE "NOTICE TO BIDDERS."

8-9-22
PROJECT ENGINEER DATE
REGISTERED CIVIL ENGINEER

DANIEL HO
No. 50914
Exp. 9-30-23
CIVIL
REGISTERED PROFESSIONAL ENGINEER
STATE OF CALIFORNIA

9-30-22
PLANS APPROVAL DATE

THE STATE OF CALIFORNIA OR ITS OFFICERS OR AGENTS SHALL NOT BE RESPONSIBLE FOR THE ACCURACY OR COMPLETENESS OF SCANNED COPIES OF THIS PLAN SHEET.

AECOM
4 N. SECOND St, SUITE 675
SAN JOSE, CA 95113

CITY OF EAST PALO ALTO
1960 TATE STREET
EAST PALO ALTO, CA 94303

CONTRACT No.	04-272821
PROJECT ID	0400000759

LAST REVISION 8-9-22
DATE PLOTTED => 10/26/2022
TIME PLOTTED => 12:55:20 PM

APPROVED AS TO IMPACT ON STATE FACILITIES AND CONFORMANCE WITH APPLICABLE STATE STANDARDS AND PRACTICES AND THAT TECHNICAL OVERSIGHT WAS PERFORMED.

CALTRANS DESIGN OVERSIGHT APPROVAL — EXP DATE | DATE SIGNED
REGISTRATION No. — LICENSE Exp DATE
CONSULTANT DESIGN ENGINEER — DANIEL HO

ROUTE 101/UNIVERSITY Ave PEDESTRIAN OVER CROSSING
DESIGN DESIGNATION

AADT (2020)	36,770	D	0.67%
AADT (2040)	38,820	T	4.23%
DHV	3890	V	25 mph
$ESAL_{20}$	5,411,429		
		TI_{20} (RAMPS)	10.0

PAVEMENT CLIMATE REGION
CENTRAL COAST

NOTES:

1. DIMENSIONS OF THE PAVEMENT STRUCTURES (STRUCTURAL SECTIONS) ARE SUBJECT TO TOLERANCES SPECIFIED IN THE STANDARD SPECIFICATIONS.

2. SUPERELEVATIONS ARE SHOWN ON THE SUPERELEVATION DIGRAM.

LEGEND:

PROPOSED PAVEMENT

No. STRUCTURAL SECTION NUMBER

TYPICAL PAVEMENT STRUCTURE SECTIONS:

1 — 1.15′ HMA (TYPE A)
0.35′ CI 2 AB

2 — 0.5′ HMA (TYPE A)
0.5′ CI 2 AB

Dist	COUNTY	ROUTE	POST MILES TOTAL PROJECT	SHEET No.	TOTAL SHEETS
04	SM	101	0.8/1.1	2	136

REGISTERED CIVIL ENGINEER — 9-15-22 DATE

9-30-22
PLANS APPROVAL DATE

REGISTERED PROFESSIONAL ENGINEER — DANIEL HO No. 50914 Exp. 9-30-23 CIVIL — STATE OF CALIFORNIA

THE STATE OF CALIFORNIA OR ITS OFFICERS OR AGENTS SHALL NOT BE RESPONSIBLE FOR THE ACCURACY OR COMPLETENESS OF SCANNED COPIES OF THIS PLAN SHEET.

AECOM
4 N. SECOND St
SUITE 675
SAN JOSE, CA 95113

CITY OF EAST PALO ALTO
1960 TATE STREET
EAST PALO ALTO, CA 94303

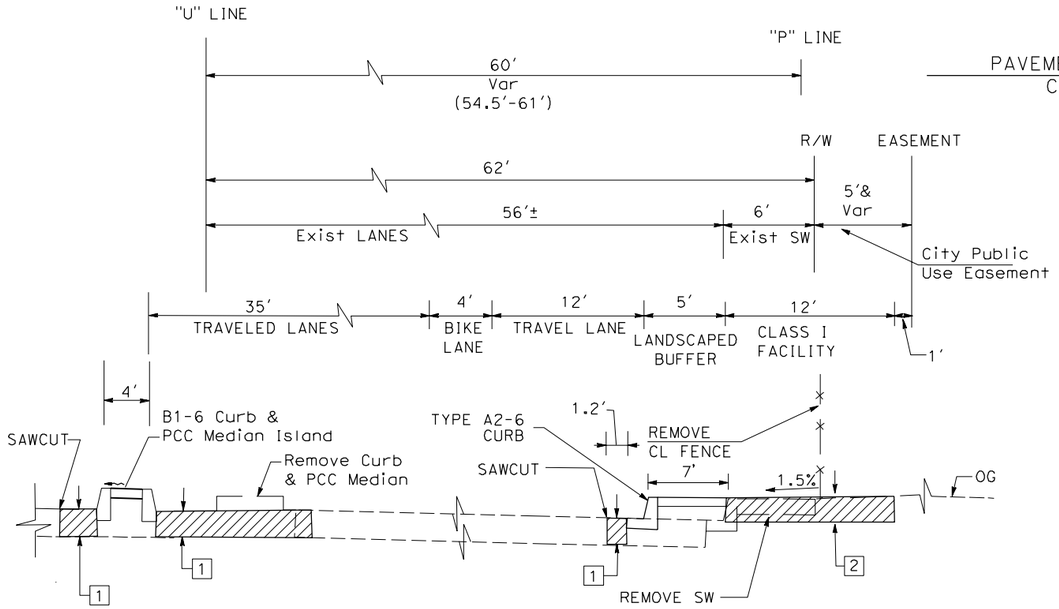

"U" 26+90 TO 29+20
UNIVERSITY Ave

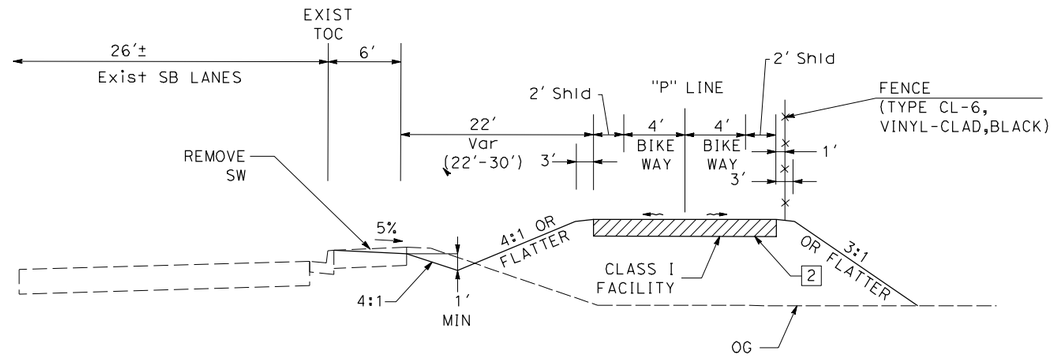

"P" 11+20 TO 15+06
UNIVERSITY Ave CLASS 1 FACILITY

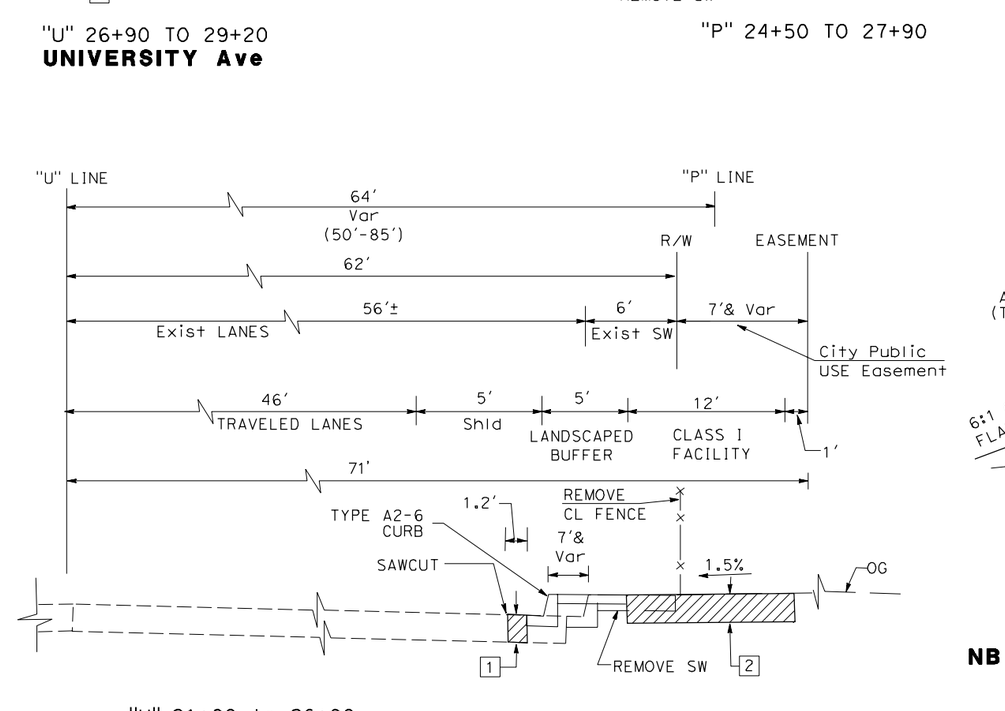

"U" 21+80 to 26+90
UNIVERSITY Ave

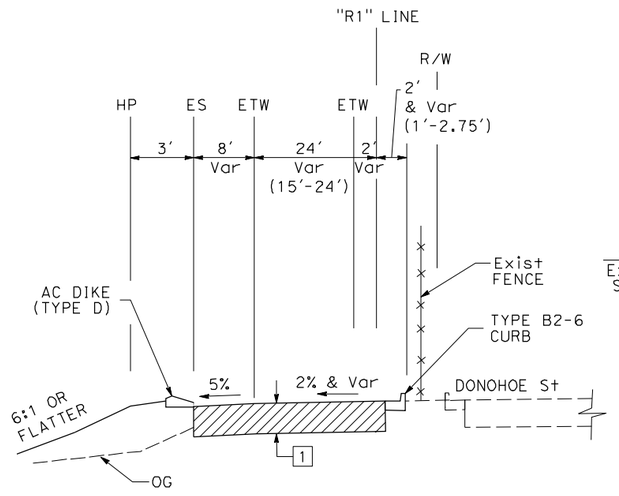

"R1" 62+43.56 TO 65+45
NB ROUTE 101 UNIVERSITY Ave LOOP OFF-RAMP

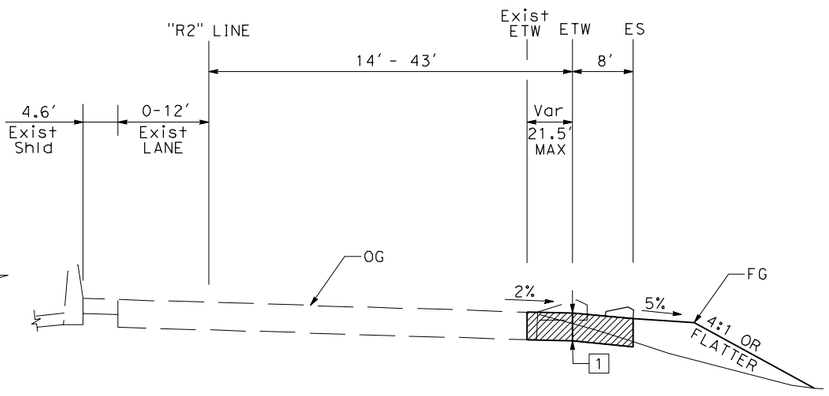

"R2" 79+64.16 TO 83+93.91
ROUTE 101/UNIVERSITY Ave LOOP OFF RAMP

TYPICAL CROSS SECTIONS

X-1

STATE OF CALIFORNIA - DEPARTMENT OF TRANSPORTATION
CONSULTANT FUNCTIONAL SUPERVISOR: HOWARD MICHAEL
CALCULATED-DESIGNED BY: JOSE CORONEL
CHECKED BY: DANIEL HO
REVISED BY: JC
DATE REVISED: 9-15-22
LAST REVISION: 9-15-22
DATE PLOTTED => 10/26/2022
TIME PLOTTED => 1:01:03 PM

BORDER LAST REVISED 8/1/2016 | USERNAME => jose.coronel | DGN FILE => 04000007591ca001.dgn | RELATIVE BORDER SCALE IS IN INCHES 0 1 2 3 | UNIT 0703 | PROJECT NUMBER & PHASE 04000007591

NOTE:

1. SAME NUMBER AND ORIENTATION FOR ALL PLAN VIEW SHEETS.

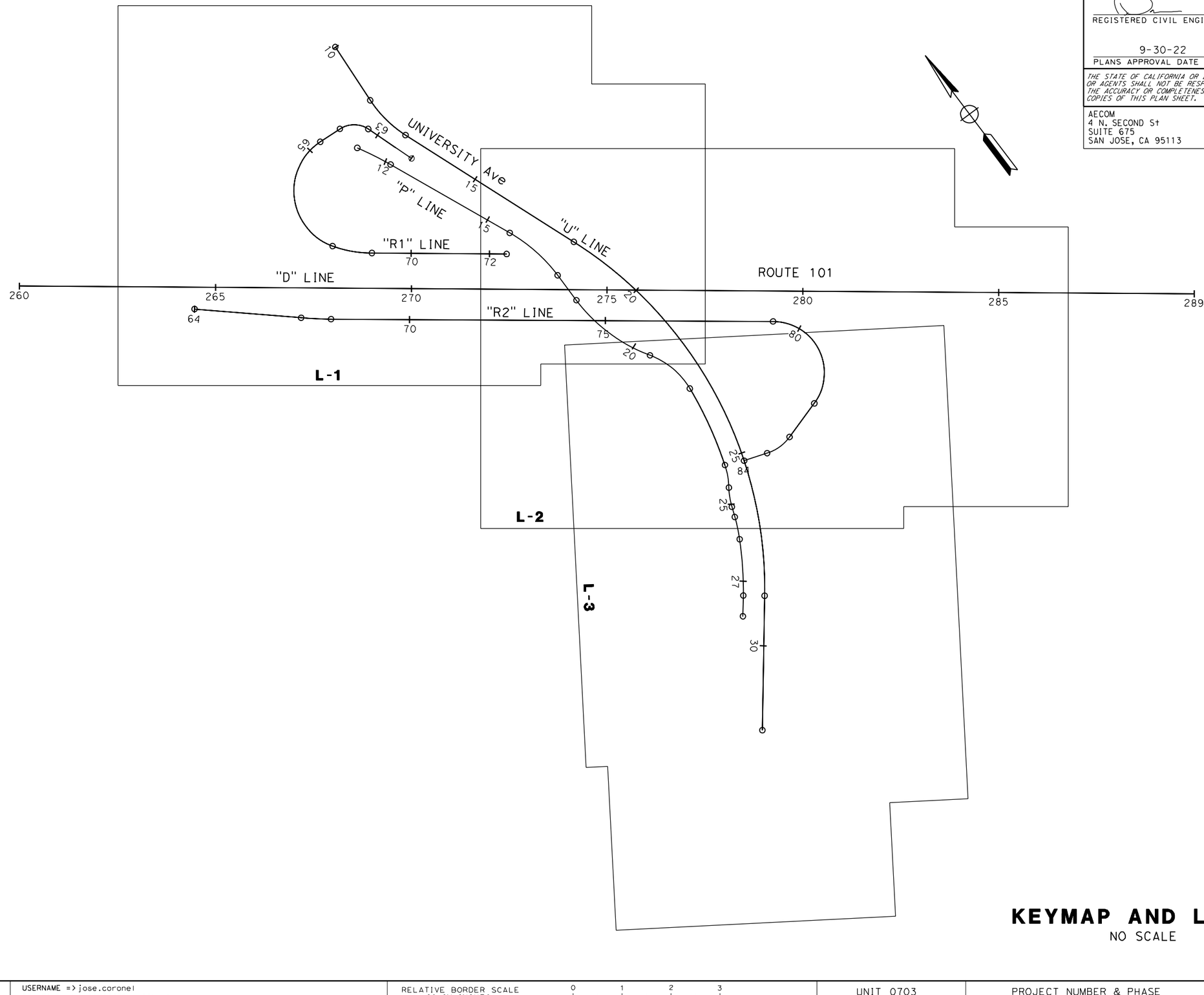

Dist	COUNTY	ROUTE	POST MILES TOTAL PROJECT	SHEET No.	TOTAL SHEETS
04	SM	101	0.8/1.1	3	136

REGISTERED CIVIL ENGINEER — DATE 9-15-22

PLANS APPROVAL DATE 9-30-22

REGISTERED PROFESSIONAL ENGINEER — DANIEL HO — No. 50914 — Exp. 9-30-23 — CIVIL — STATE OF CALIFORNIA

THE STATE OF CALIFORNIA OR ITS OFFICERS OR AGENTS SHALL NOT BE RESPONSIBLE FOR THE ACCURACY OR COMPLETENESS OF SCANNED COPIES OF THIS PLAN SHEET.

AECOM
4 N. SECOND St
SUITE 675
SAN JOSE, CA 95113

CITY OF EAST PALO ALTO
1960 TATE STREET
EAST PALO ALTO, CA 94303

KEYMAP AND LINE INDEX

NO SCALE

K-1

REVISED BY	DATE REVISED
JC	9-15-22

CALCULATED-DESIGNED BY: JOSE CORONEL
CHECKED BY: DANIEL HO

CONSULTANT FUNCTIONAL SUPERVISOR: HOWARD MICHAEL

STATE OF CALIFORNIA - DEPARTMENT OF TRANSPORTATION
Caltrans

LAST REVISION 9-15-22
DATE PLOTTED => 10/26/2022
TIME PLOTTED => 1:03:52 PM

BORDER LAST REVISED 8/1/2016

USERNAME => jose.coronel
DGN FILE => 04000007591da001.dgn

RELATIVE BORDER SCALE IS IN INCHES 0 1 2 3

UNIT 0703

PROJECT NUMBER & PHASE 04000007591

NOTES:

1. FOR ACCURATE RIGHT OF WAY DATA, CONTACT RIGHT OF WAY ENGINEERING AT THE DISTRICT OFFICE.
2. FOR COMPLETE PROJECT CONTROL DATA, SEE THE SURVEY ON FILE IN THE SURVEYS DEPARTMENT AT THE DISTRICT OFFICE.
3. HORIZONTAL DATUM IS THE NORTH AMERICAN DATUM OF 1983 (2011), CALIFORNIA COORDINATE SYSTEM ZONE 3, EPOCH 2010.00. ALL DISTANCES ARE BASED ON SURVEY FEET AND ARE GRID DISTANCES. TO CONVERT GRID DISTANCES TO GROUND LEVEL DISTANCES, MULTIPLY GRID DISTANCES BY 1.0000730.

LEGEND:

△ INDICATES A NATIONAL GEODETIC SURVEY HORIZONTAL AND VERTICAL CONTROL STATION USED FOR THIS SURVEY

Dist	COUNTY	ROUTE	POST MILES TOTAL PROJECT	SHEET No.	TOTAL SHEETS
04	SM	101	0.8/1.1	4	136

8-9-22
REGISTERED LAND SURVEYOR — DATE

9-30-22
PLANS APPROVAL DATE

LICENSED LAND SURVEYOR BRIAN M. COLESON LS 8367 STATE OF CALIFORNIA

THE STATE OF CALIFORNIA OR ITS OFFICERS OR AGENTS SHALL NOT BE RESPONSIBLE FOR THE ACCURACY OR COMPLETENESS OF SCANNED COPIES OF THIS PLAN SHEET.

AECOM
4 N. SECOND ST
SUITE 675
SAN JOSE, CA 95113

CITY OF EAST PALO ALTO
1960 TATE STREET
EAST PALO ALTO, CA 94303

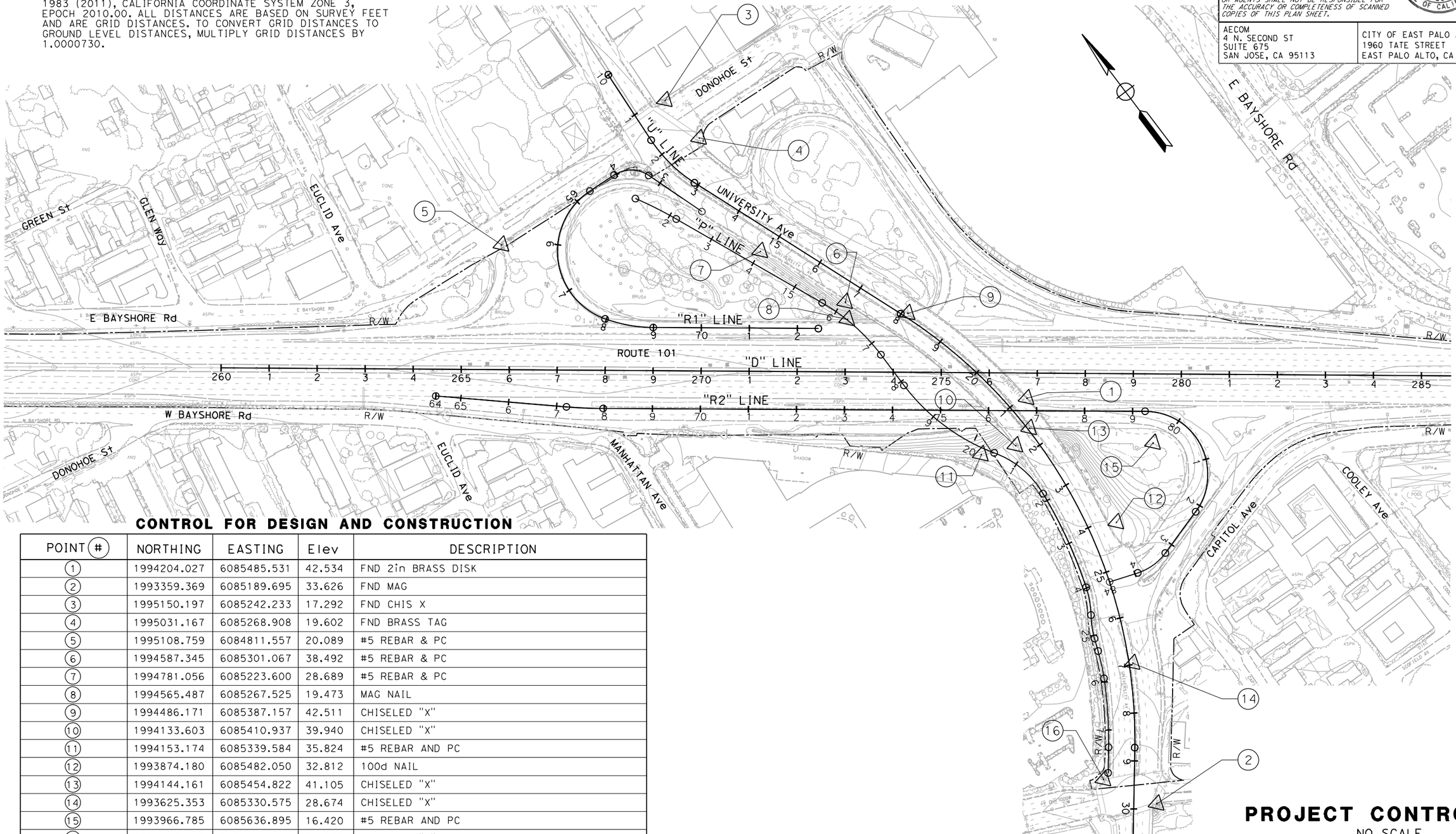

CONTROL FOR DESIGN AND CONSTRUCTION

POINT (#)	NORTHING	EASTING	Elev	DESCRIPTION
(1)	1994204.027	6085485.531	42.534	FND 2in BRASS DISK
(2)	1993359.369	6085189.695	33.626	FND MAG
(3)	1995150.197	6085242.233	17.292	FND CHIS X
(4)	1995031.167	6085268.908	19.602	FND BRASS TAG
(5)	1995108.759	6084811.557	20.089	#5 REBAR & PC
(6)	1994587.345	6085301.067	38.492	#5 REBAR & PC
(7)	1994781.056	6085223.600	28.689	#5 REBAR & PC
(8)	1994565.487	6085267.525	19.473	MAG NAIL
(9)	1994486.171	6085387.157	42.511	CHISELED "X"
(10)	1994133.603	6085410.937	39.940	CHISELED "X"
(11)	1994153.174	6085339.584	35.824	#5 REBAR AND PC
(12)	1993874.180	6085482.050	32.812	100d NAIL
(13)	1994144.161	6085454.822	41.105	CHISELED "X"
(14)	1993625.353	6085330.575	28.674	CHISELED "X"
(15)	1993966.785	6085636.895	16.420	#5 REBAR AND PC
(16)	1993466.418	6085133.777	31.992	CHISELED "X"

APPROVED FOR PROJECT CONTROL INFORMATION ONLY

PROJECT CONTROL
NO SCALE

PC-1

LAST REVISION 8-9-22
DATE PLOTTED => 10/26/2022
TIME PLOTTED => 1:19:54 PM

STATE OF CALIFORNIA - DEPARTMENT OF TRANSPORTATION
Caltrans
CONSULTANT FUNCTIONAL SUPERVISOR: HOWARD MICHAEL
CALCULATED-DESIGNED BY: BRIAN COLESON
CHECKED BY: DANIEL HO
REVISED BY: JC
DATE REVISED: 8-9-22

BORDER LAST REVISED 8/1/2016 | USERNAME => jose.coronel | DGN FILE => 04000007591dc001.dgn | RELATIVE BORDER SCALE IS IN INCHES 0 1 2 3 | UNIT 0703 | PROJECT NUMBER & PHASE 04000007591

Dist	COUNTY	ROUTE	POST MILES TOTAL PROJECT	SHEET No.	TOTAL SHEETS
04	SM	101	0.8/1.1	5	136

REGISTERED CIVIL ENGINEER — 9-15-22 DATE

PLANS APPROVAL DATE — 9-30-22

REGISTERED PROFESSIONAL ENGINEER — DANIEL HO No. 50914 Exp. 9-30-23 CIVIL — STATE OF CALIFORNIA

THE STATE OF CALIFORNIA OR ITS OFFICERS OR AGENTS SHALL NOT BE RESPONSIBLE FOR THE ACCURACY OR COMPLETENESS OF SCANNED COPIES OF THIS PLAN SHEET.

AECOM
4 N. SECOND St
SUITE 675
SAN JOSE, CA 95113

CITY OF EAST PALO ALTO
1960 TATE STREET
EAST PALO ALTO, CA 94303

NOTES:

1. FOR ACCURATE RIGHT OF WAY DATA, CONTACT RIGHT OF WAY ENGINEERING AT THE DISTRICT OFFICE.
2. COORDINATES, DISTANCES AND BEARINGS SHOWN ARE BASED ON CALIFORNIA COORDINATE SYSTEM ZONE 3. THE HORIZONTAL DATUM IS NAD 1983. THE VERTICAL DATUM IS NGVD 1929.

CURVE DATA

No.	R	△	T	L	N-COORDINATE	E-COORDINATE
(1)	800′	6°49′09"	47.58′	95.21′	1994617.54	6084393.29
(2)	406′	23°12′02"	81.64′	164.40′	1994449.89	6084893.32
(3)	300′	24°21′31"	64.75′	127.54′	1995074.55	6085485.41
(4)	1050′	58°32′45"	588.58′	1072.91′	1994123.10	6084400.81
(5)	65′	67°35′26"	43.51′	76.68′	1995017.67	6085076.36
(6)	150′	126°45′38"	299.29′	331.86′	1994936.64	6085010.93
(7)	300′	19°29′07"	51.51′	102.03′	1995018.64	6085136.53
(17)	1000′	4°23′52"	38.40′	76.76′	1995503.29	6085375.91

ABBREVIATIONS:

AITS ALTERNATIVE IN-LINE TERMINAL SYSTEM

LEGEND:

AC PLANING
REMOVE BASE AND SURFACE
ROADWAY EXCAVATION (TYPE Z-2, ADL)
IRRIGATION CONDUIT
ABUTMENT
COLUMN

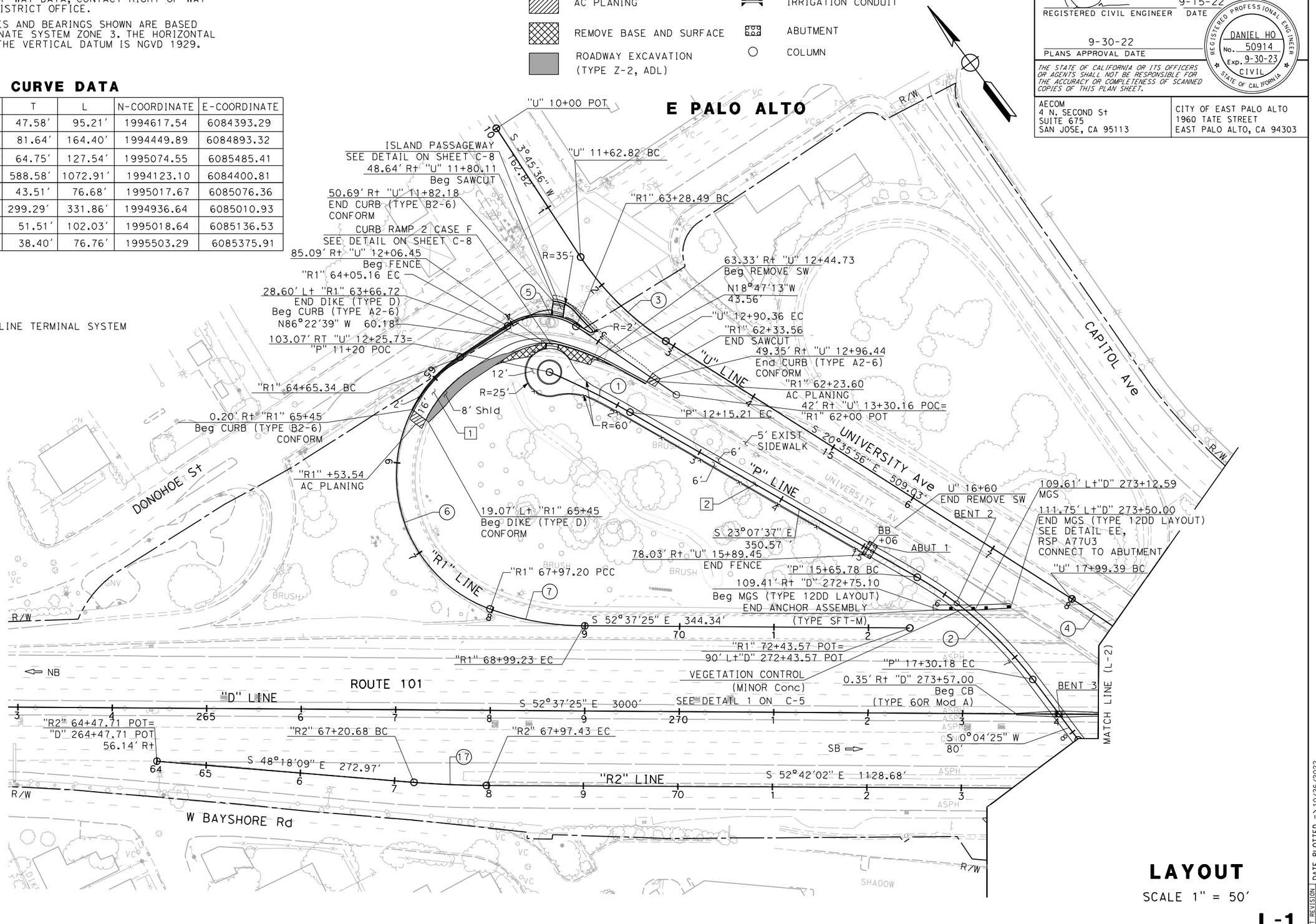

LAYOUT

SCALE 1" = 50′

L-1

STATE OF CALIFORNIA - DEPARTMENT OF TRANSPORTATION	CONSULTANT FUNCTIONAL SUPERVISOR	CALCULATED-DESIGNED BY	CHECKED BY	REVISED BY	DATE REVISED
Caltrans	HOWARD MICHAEL	JOSE CORONEL	DANIEL HO	JC	9-15-22

DATE PLOTTED => 10/26/2022
TIME PLOTTED => 11:22:20 PM

LAST REVISION 9-15-22

BORDER LAST REVISED 8/1/2016 | USERNAME => jose.coronel | DGN FILE => 04000007591ea001.dgn | RELATIVE BORDER SCALE IS IN INCHES 0 1 2 3 | UNIT 0703 | PROJECT NUMBER & PHASE 04000007591

Dist	COUNTY	ROUTE	POST MILES TOTAL PROJECT	SHEET No.	TOTAL SHEETS
04	SM	101	0.8/1.1	6	136

REGISTERED CIVIL ENGINEER — 9-15-22 DATE

9-30-22
PLANS APPROVAL DATE

DANIEL HO No. 50914 Exp. 9-30-23 CIVIL — REGISTERED PROFESSIONAL ENGINEER — STATE OF CALIFORNIA

THE STATE OF CALIFORNIA OR ITS OFFICERS OR AGENTS SHALL NOT BE RESPONSIBLE FOR THE ACCURACY OR COMPLETENESS OF SCANNED COPIES OF THIS PLAN SHEET.

AECOM
4 N. SECOND St
SUITE 675
SAN JOSE, CA 95113

CITY OF EAST PALO ALTO
1960 TATE STREET
EAST PALO ALTO, CA 94303

NOTE:

FOR ACCURATE RIGHT OF WAY DATA, CONTACT RIGHT OF WAY ENGINEERING AT THE DISTRICT OFFICE.

CURVE DATA

No.	R	△	T	L	N-COORDINATE	E-COORDINATE
⑧	1050′	58°32′45"	588.58′	1072.91′	1994123.10	6084400.81
⑨	418′	32°35′39"	122.21′	237.79′	1994368.83	6085717.22
⑩	200′	38°43′42"	70.29′	135.19′	1994036.60	6085196.12
⑪	1000′	12°20′19"	108.09′	215.35′	1994123.10	6084400.81
⑫	200′	16°48′19"	29.54′	58.66′	1993868.65	6085159.26
⑬	200′	14°13′08"	24.95′	49.63′	1993637.21	6085485.51
⑱	131.5′	125°59′38"	258.10′	289.23′	1993919.23	6085588.06
⑲	115′	35°48′20"	37.13′	71.83′	1993835.70	6085473.04

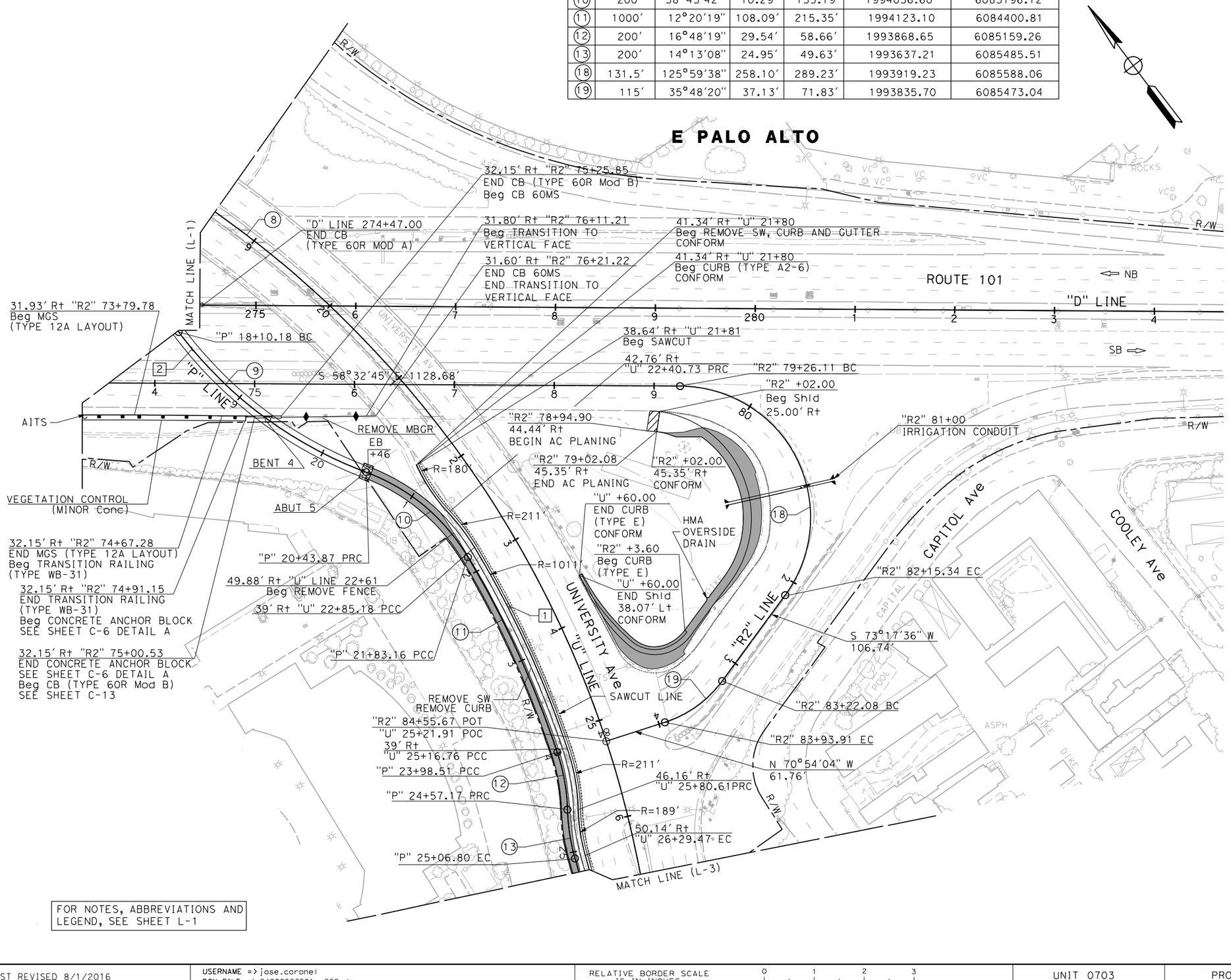

FOR NOTES, ABBREVIATIONS AND LEGEND, SEE SHEET L-1

LAYOUT

SCALE 1" = 50′

L-2

REVISED BY	DATE REVISED
JC	9-15-22

CALCULATED-DESIGNED BY: JOSE CORONEL
CHECKED BY: DANIEL HO
CONSULTANT FUNCTIONAL SUPERVISOR: HOWARD MICHAEL
STATE OF CALIFORNIA - DEPARTMENT OF TRANSPORTATION

DATE PLOTTED => 10/26/2022
TIME PLOTTED => 1:24:30 PM
LAST REVISION 9-15-22

BORDER LAST REVISED 8/1/2016 | USERNAME => jose.coronel | DGN FILE => 04000007591ea002.dgn | RELATIVE BORDER SCALE IS IN INCHES 0 1 2 3 | UNIT 0703 | PROJECT NUMBER & PHASE 04000007591

Dist	COUNTY	ROUTE	POST MILES TOTAL PROJECT	SHEET No.	TOTAL SHEETS
04	SM	101	0.8/1.1	7	136

REGISTERED CIVIL ENGINEER — 9-15-22 DATE

9-30-22 PLANS APPROVAL DATE

REGISTERED PROFESSIONAL ENGINEER — DANIEL HO No. 50914 Exp. 9-30-23 CIVIL — STATE OF CALIFORNIA

THE STATE OF CALIFORNIA OR ITS OFFICERS OR AGENTS SHALL NOT BE RESPONSIBLE FOR THE ACCURACY OR COMPLETENESS OF SCANNED COPIES OF THIS PLAN SHEET.

AECOM
4 N. SECOND St
SUITE 675
SAN JOSE, CA 95113

CITY OF EAST PALO ALTO
1960 TATE STREET
EAST PALO ALTO, CA 94303

NOTE:

FOR ACCURATE RIGHT OF WAY DATA, CONTACT RIGHT OF WAY ENGINEERING AT THE DISTRICT OFFICE.

CURVE DATA

No.	R	△	T	L	N-COORDINATE	E-COORDINATE
(14)	1050′	58°32′45"	588.58′	1072.91′	1994123.10	6084400.81
(15)	449′	07°26′31"	29.20′	58.32′	1993845.93	6084870.39
(16)	880′	09°22′21"	72.14′	143.95′	1994052.08	6084491.89

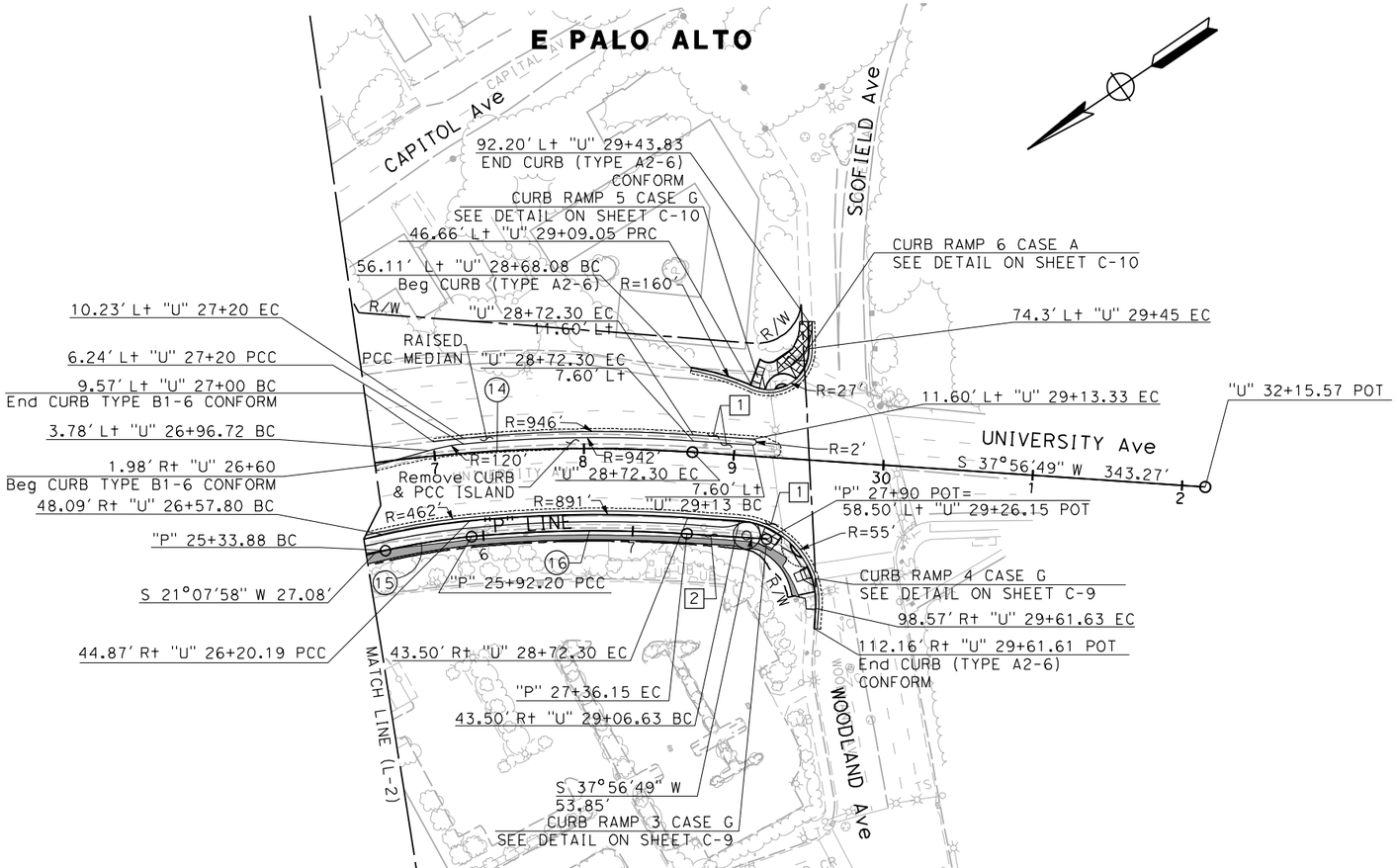

FOR NOTES, ABBREVIATIONS AND LEGEND, SEE SHEET L-1

LAYOUT

SCALE 1" = 50′

L-3

REVISED BY	DATE REVISED
JC	9-15-22

CALCULATED-DESIGNED BY: JOSE CORONEL
CHECKED BY: DANIEL HO
CONSULTANT FUNCTIONAL SUPERVISOR: HOWARD MICHAEL
STATE OF CALIFORNIA - DEPARTMENT OF TRANSPORTATION

LAST REVISION 9-15-22
DATE PLOTTED => 10/26/2022
TIME PLOTTED => 1:26:35 PM

Dist	COUNTY	ROUTE	POST MILES TOTAL PROJECT	SHEET No.	TOTAL SHEETS
04	SM	101	0.8/1.1	8	136

REGISTERED CIVIL ENGINEER — DATE 9-15-22

PLANS APPROVAL DATE 9-30-22

REGISTERED PROFESSIONAL ENGINEER — DANIEL HO No. 50914 Exp. 9-30-23 CIVIL — STATE OF CALIFORNIA

THE STATE OF CALIFORNIA OR ITS OFFICERS OR AGENTS SHALL NOT BE RESPONSIBLE FOR THE ACCURACY OR COMPLETENESS OF SCANNED COPIES OF THIS PLAN SHEET.

AECOM
4 N. SECOND St
SUITE 675
SAN JOSE, CA 95113

CITY OF EAST PALO ALTO
1960 TATE STREET
EAST PALO ALTO, CA 94303

SUPERELEVATION DIAGRAM

"P" LINE

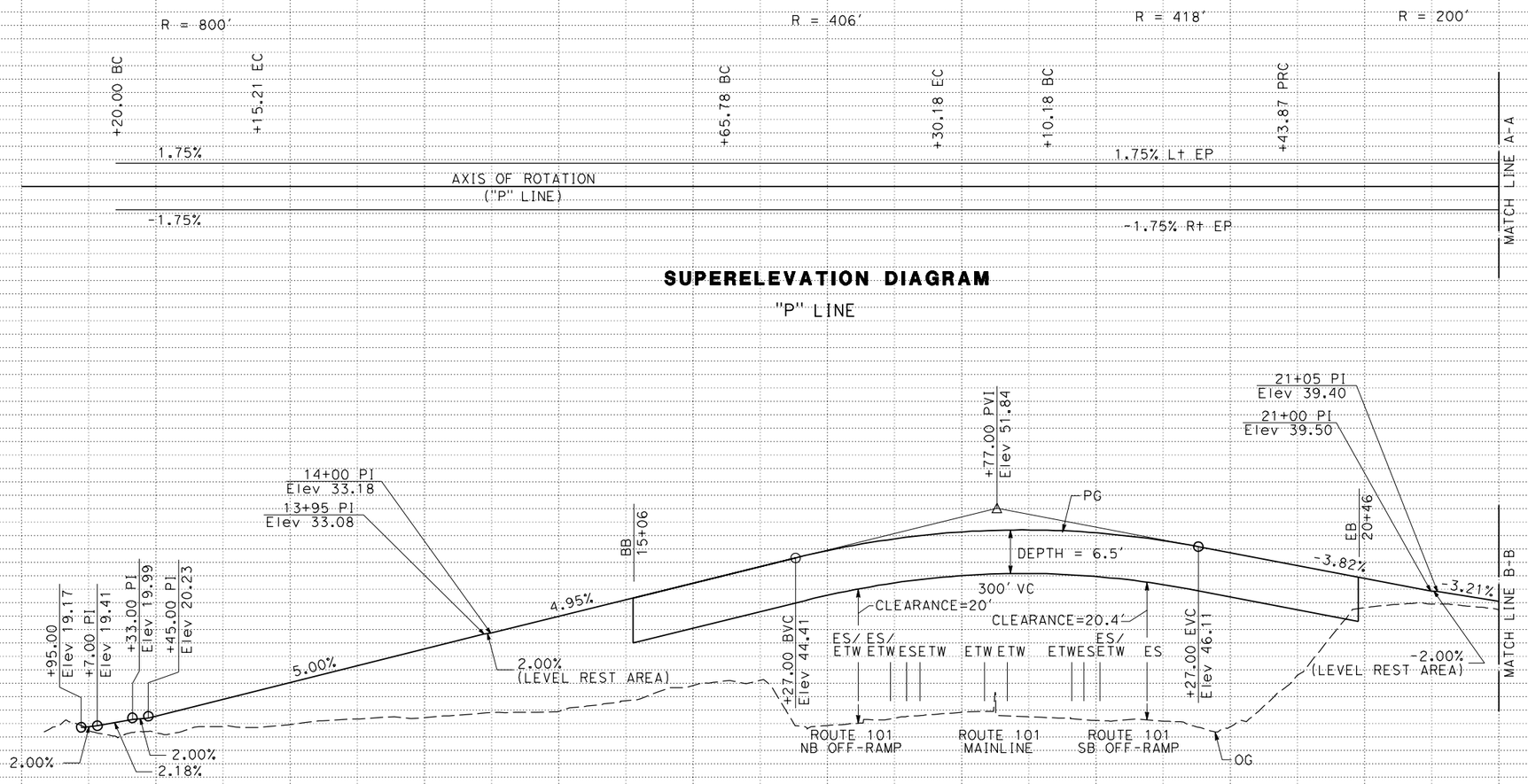

UNIVERSITY Ave OC

"P" LINE

PROFILE AND SUPERELEVATION DIAGRAM

SCALE: Horiz 1" = 50'
Vert 1" = 10'

P-1

STATION	11	2	3	4	15	6	7	8	9	20	1	TOTAL
CY Exc		0										0
CY Emb		9100										9100

LAST REVISION 9-15-22
DATE PLOTTED => 6/14/2023
TIME PLOTTED => 1:24:01 PM

STATE OF CALIFORNIA - DEPARTMENT OF TRANSPORTATION
CONSULTANT FUNCTIONAL SUPERVISOR: HOWARD MICHAEL
CALCULATED-DESIGNED BY: LAN HO
CHECKED BY: DANIEL HO
REVISED BY: JC
DATE REVISED: 9-15-22

BORDER LAST REVISED 8/1/2016
USERNAME => jose.coronel
DGN FILE => 04000007591fa001.dgn
RELATIVE BORDER SCALE IS IN INCHES 0 1 2 3
UNIT 0703
PROJECT NUMBER & PHASE 04000007591

Dist	COUNTY	ROUTE	POST MILES TOTAL PROJECT	SHEET No.	TOTAL SHEETS
04	SM	101	0.8/1.1	9	136

REGISTERED CIVIL ENGINEER — DATE 9-15-22

PLANS APPROVAL DATE 9-30-22

REGISTERED PROFESSIONAL ENGINEER — DANIEL HO No. 50914 Exp. 9-30-23 CIVIL — STATE OF CALIFORNIA

THE STATE OF CALIFORNIA OR ITS OFFICERS OR AGENTS SHALL NOT BE RESPONSIBLE FOR THE ACCURACY OR COMPLETENESS OF SCANNED COPIES OF THIS PLAN SHEET.

AECOM
4 N. SECOND St
SUITE 675
SAN JOSE, CA 95113

CITY OF EAST PALO ALTO
1960 TATE STREET
EAST PALO ALTO, CA 94303

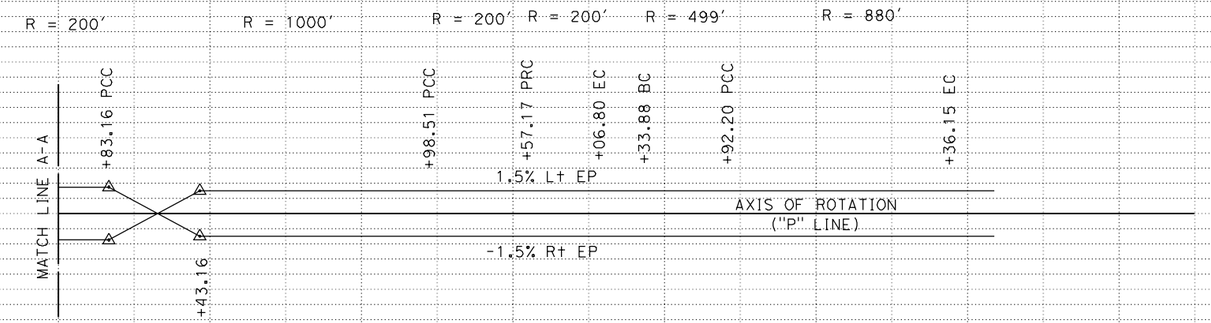

SUPERELEVATION DIAGRAM

"P" LINE

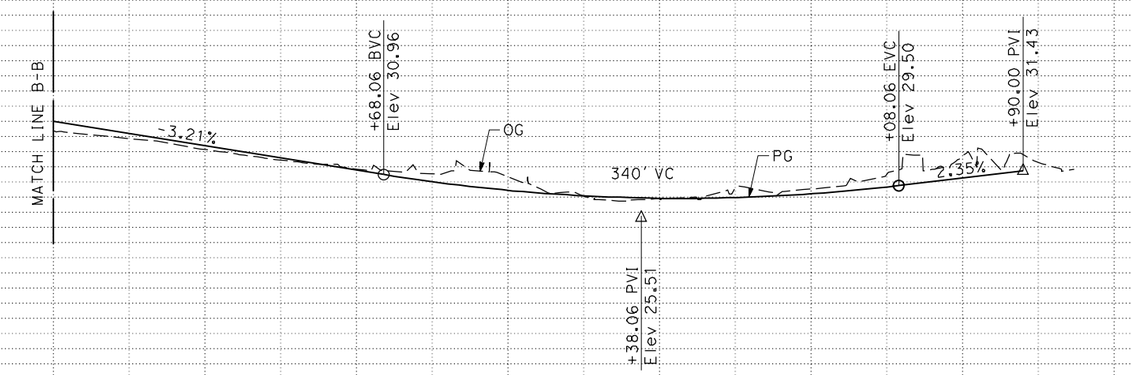

UNIVERSITY Ave OC

"P" LINE

PROFILE AND SUPERELEVATION DIAGRAM

SCALE: Horiz 1" = 50'
Vert 1" = 10'

P-2

STATION	21	2	3	4	25	6	7	8	TOTAL
CY Exc			620						620
CY Emb			0						0

LAST REVISION 9-15-22
DATE PLOTTED => 6/14/2023
TIME PLOTTED => 1:26:26 PM

REVISED BY	DATE REVISED
JC	9-15-22

LAN HO — DANIEL HO — CALCULATED-DESIGNED BY — CHECKED BY

CONSULTANT FUNCTIONAL SUPERVISOR: HOWARD MICHAEL

STATE OF CALIFORNIA - DEPARTMENT OF TRANSPORTATION — Caltrans

BORDER LAST REVISED 8/1/2016 | USERNAME => jose.coronel | DGN FILE => 040000075911fa002.dgn | RELATIVE BORDER SCALE IS IN INCHES 0 1 2 3 | UNIT 0703 | PROJECT NUMBER & PHASE 040000007591

NOTE:

FOR ACCURATE RIGHT OF WAY DATA, CONTACT
RIGHT OF WAY ENGINEERING AT THE DISTRICT OFFICE.

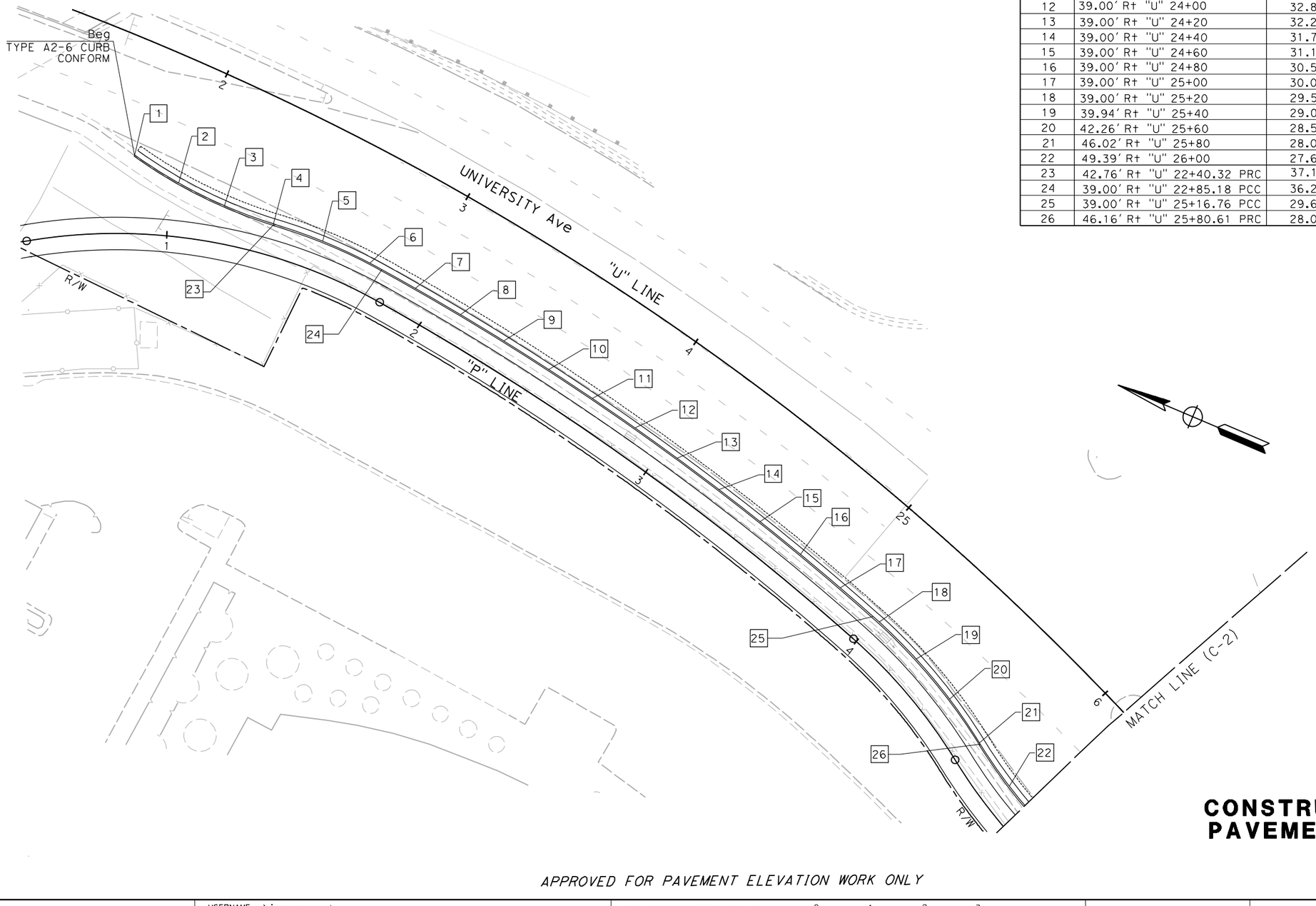

FLOWLINE ELEVATIONS

No.	LOCATION	ELEVATION
1	41.34' Rt "U" 21+80 BC	38.64
2	44.24' Rt "U" 22+00	37.90
3	44.72' Rt "U" 22+20	37.50
4	42.82' Rt "U" 22+40	37.10
5	40.18' Rt "U" 22+60	36.70
6	39.05' Rt "U" 22+80	36.30
7	39.00' Rt "U" 23+00	35.87
8	39.00' Rt "U" 23+20	35.26
9	39.00' Rt "U" 23+40	34.64
10	39.00' Rt "U" 23+60	34.03
11	39.00' Rt "U" 23+80	33.41
12	39.00' Rt "U" 24+00	32.85
13	39.00' Rt "U" 24+20	32.25
14	39.00' Rt "U" 24+40	31.70
15	39.00' Rt "U" 24+60	31.14
16	39.00' Rt "U" 24+80	30.58
17	39.00' Rt "U" 25+00	30.03
18	39.00' Rt "U" 25+20	29.54
19	39.94' Rt "U" 25+40	29.06
20	42.26' Rt "U" 25+60	28.57
21	46.02' Rt "U" 25+80	28.09
22	49.39' Rt "U" 26+00	27.60
23	42.76' Rt "U" 22+40.32 PRC	37.11
24	39.00' Rt "U" 22+85.18 PCC	36.20
25	39.00' Rt "U" 25+16.76 PCC	29.62
26	46.16' Rt "U" 25+80.61 PRC	28.08

Dist	COUNTY	ROUTE	POST MILES TOTAL PROJECT	SHEET No.	TOTAL SHEETS
04	SM	101	0.8/1.1	10	136

9-15-22
REGISTERED CIVIL ENGINEER DATE

REGISTERED PROFESSIONAL ENGINEER
DANIEL HO
No. 50914
Exp. 9-30-23
CIVIL
STATE OF CALIFORNIA

9-30-22
PLANS APPROVAL DATE

THE STATE OF CALIFORNIA OR ITS OFFICERS OR AGENTS SHALL NOT BE RESPONSIBLE FOR THE ACCURACY OR COMPLETENESS OF SCANNED COPIES OF THIS PLAN SHEET.

AECOM
4 N. SECOND St
SUITE 675
SAN JOSE, CA 95113

CITY OF EAST PALO ALTO
1960 TATE STREET
EAST PALO ALTO, CA 94303

CONSTRUCTION DETAILS AND PAVEMENT ELEVATION PLAN

SCALE 1" = 20'

C-1

APPROVED FOR PAVEMENT ELEVATION WORK ONLY

REVISED BY	DATE REVISED
JC	9-15-22

CALCULATED-DESIGNED BY: JOSE CORONEL
CHECKED BY: DANIEL HO

CONSULTANT FUNCTIONAL SUPERVISOR: HOWARD MICHAEL

STATE OF CALIFORNIA - DEPARTMENT OF TRANSPORTATION
Caltrans

LAST REVISION 9-15-22
DATE PLOTTED => 6/12/2023
TIME PLOTTED => 4:22:47 PM

BORDER LAST REVISED 8/1/2016
USERNAME => jose.coronel
DGN FILE => 04000007591ga001.dgn
RELATIVE BORDER SCALE IS IN INCHES 0 1 2 3
UNIT 0703
PROJECT NUMBER & PHASE 04000007591

NOTE:

FOR ACCURATE RIGHT OF WAY DATA, CONTACT
RIGHT OF WAY ENGINEERING AT THE DISTRICT OFFICE.

FLOWLINE ELEVATIONS

No.	LOCATION	ELEVATION
27	50.44′ Rt "U" 26+20	27.47
28	50.14′ Rt "U" 26+29.47 EC	27.41
29	49.46′ Rt "U" 26+40	27.33
30	48.09′ Rt "U" 26+57.80 BC	27.20
31	47.90′ Rt "U" 26+60	27.19
32	46.46′ Rt "U" 26+80	27.06
33	45.45′ Rt "U" 27+00	26.96
34	44.87′ Rt "U" 27+20	26.78
35	44.87′ Rt "U" 27+20.19 PCC	26.77
36	44.54′ Rt "U" 27+40	26.91
37	44.25′ Rt "U" 27+60	27.21
38	44.00′ Rt "U" 27+80	27.51
39	43.81′ Rt "U" 28+00	27.85
40	43.66′ Rt "U" 28+20	28.31
41	43.56′ Rt "U" 28+40	28.77
42	43.50′ Rt "U" 28+60	29.23
43	43.50′ Rt "U" 28+72.30 EC	29.51
44	43.50′ Rt "U" 28+80	29.69

FLOWLINE ELEVATIONS

No.	LOCATION	ELEVATION
45	43.50′ Rt "U" 29+00	30.15
46	43.50′ Rt "U" 29+06.63 BC	30.41
47	59.63′ Rt "U" 29+45.54 MP	31.33
48	98.57 Rt "U" 29+61.63 EC	32.18
49	112.16′ Rt "U" 29+61.61	31.97

FLOWLINE ELEVATIONS

No.	LOCATION	ELEVATION
50	1.98′ Rt "U" 26+60	28.39
51	1.02′ Lt "U" 26+80	28.40
52	3.78′ Lt "U" 26+96.72 BC	28.40
53	4.37′ Lt "U" 27+00	28.41
54	6.24′ Lt "U" 27+20	28.46
55	6.57′ Lt "U" 27+40	28.55
56	6.86′ Lt "U" 27+60	28.69
57	7.10′ Lt "U" 27+80	28.87
58	7.30′ Lt "U" 28+00	29.17
59	7.44′ Lt "U" 28+20	29.56
60	7.54′ Lt "U" 28+40	29.95
61	7.59′ Lt "U" 28+60	30.38
62	7.60′ Lt "U" 28+80	30.80
63	7.60′ Lt "U" 29+00	31.39
64	7.60′ Lt "U" 29+12	31.69
65	11.60′ Lt "U" 29+12	31.45
66	11.60′ Lt "U" 29+00	31.05
67	11.60′ Lt "U" 28+80	30.46

FLOWLINE ELEVATIONS

No.	LOCATION	ELEVATION
68	11.60′ Lt "U" 28+60	29.91
69	11.54′ Lt "U" 28+40	29.51
70	11.44′ Lt "U" 28+20	29.18
71	11.29′ Lt "U" 28+00	28.88
72	11.10′ Lt "U" 27+80	28.66
73	10.86′ Lt "U" 27+60	28.44
74	10.57′ Lt "U" 27+40	28.35
75	10.24′ Lt "U" 27+20	28.27
76	9.57′ Lt "U" 27+00	28.19
77	56.11′ Lt "U" 27+68.08 BC	29.50
78	46.66′ Lt "U" 29+09 PRC	31.12
79	46.84′ Rt "U" 29+28 HP	31.35
80	74.30′ Lt "U" 29+45.39 EC	31.13
81	92.20′ Lt "U" 29+44	31.05

Dist	COUNTY	ROUTE	POST MILES TOTAL PROJECT	SHEET No.	TOTAL SHEETS
04	SM	101	0.8/1.1	11	136

9-15-22
REGISTERED CIVIL ENGINEER DATE

9-30-22
PLANS APPROVAL DATE

REGISTERED PROFESSIONAL ENGINEER
DANIEL HO
No. 50914
Exp. 9-30-23
CIVIL
STATE OF CALIFORNIA

THE STATE OF CALIFORNIA OR ITS OFFICERS OR AGENTS SHALL NOT BE RESPONSIBLE FOR THE ACCURACY OR COMPLETENESS OF SCANNED COPIES OF THIS PLAN SHEET.

AECOM
4 N. SECOND St
SUITE 675
SAN JOSE, CA 95113

CITY OF EAST PALO ALTO
1960 TATE STREET
EAST PALO ALTO, CA 94303

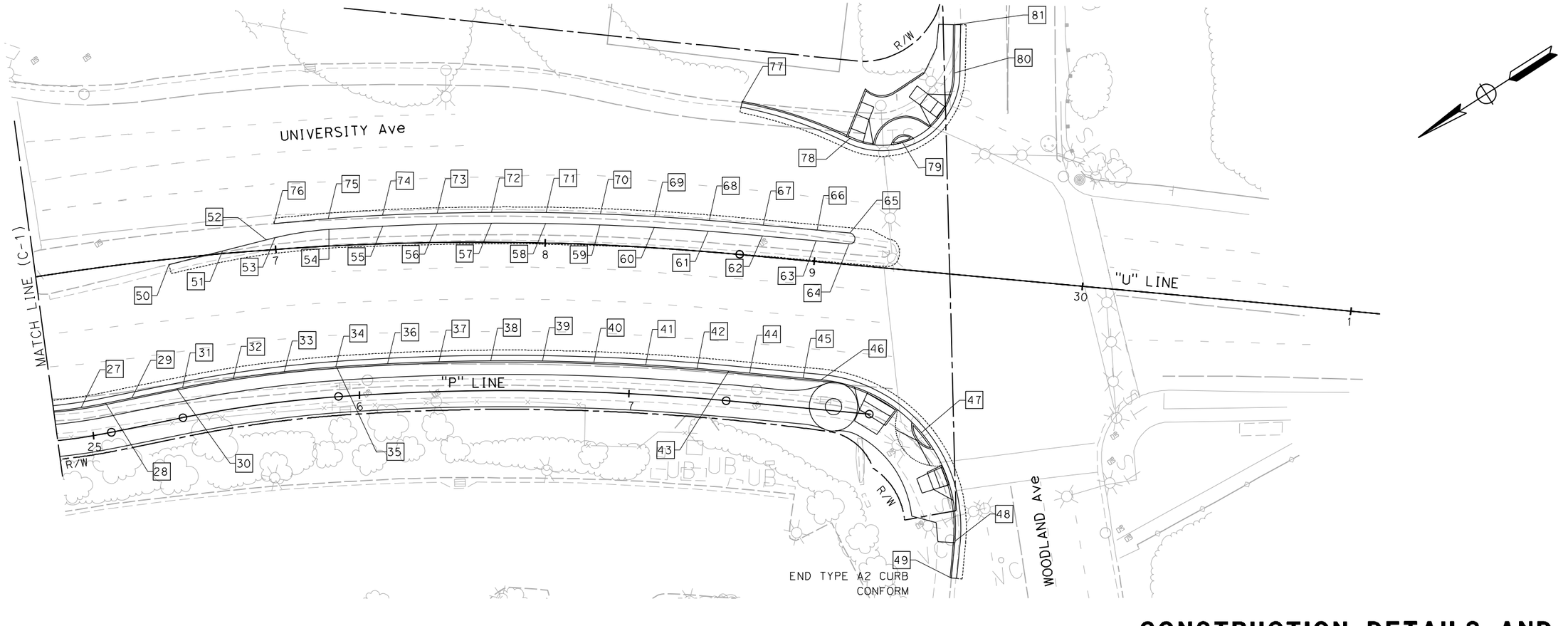

CONSTRUCTION DETAILS AND PAVEMENT ELEVATION PLAN

SCALE 1" = 20′

APPROVED FOR PAVEMENT ELEVATION WORK ONLY

C-2

LAST REVISION 9-15-22
DATE PLOTTED => 6/14/2023
TIME PLOTTED => 5:31:14 PM

REVISED BY	DATE REVISED
JC	9-15-22

NELSON HOM — DANIEL HO
CALCULATED-DESIGNED BY — CHECKED BY
CONSULTANT FUNCTIONAL SUPERVISOR — HOWARD MICHAEL
STATE OF CALIFORNIA - DEPARTMENT OF TRANSPORTATION

BORDER LAST REVISED 8/1/2016
USERNAME => jose.coronel
DGN FILE => 040000075919a002.dgn
RELATIVE BORDER SCALE IS IN INCHES 0 1 2 3
UNIT 0703
PROJECT NUMBER & PHASE 040000007591

NOTE:

FOR ACCURATE RIGHT OF WAY DATA, CONTACT RIGHT OF WAY ENGINEERING AT THE DISTRICT OFFICE.

FLOWLINE/ PAVEMENT ELEVATIONS

No.	LOCATION	ELEVATION
1	2.83′ Rt "R1" 62+75	19.95
2	2.36′ Rt "R1" 62+81	19.65
3	1.34′ Rt "R1" 63+01	19.35
4	0.38′ Rt "R1" 63+21	19.10
5	1.86′ Rt "R1" 63+41	18.85
6	1.60′ Rt "R1" 63+59	18.60
7	1.36′ Rt "R1" 63+79	18.50
8	1.18′ Rt "R1" 64+00	18.40
9	1.05′ Rt "R1" 64+20	18.50
10	1.05′ Rt "R1" 64+40	18.60
11	1.05′ Rt "R1" 64+60	18.70
12	1.00′ Rt "R1" 64+80	18.80
13	0.95′ Rt "R1" 65+00	18.90
14	0.67′ Rt "R1" 65+20	19.00
15	14.90′ Rt "R1" 63+41	19.27
16	18.75′ Rt "R1" 63+57	18.03

FLOWLINE/ PAVEMENT ELEVATIONS

No.	LOCATION	ELEVATION
17	17.09′ Lt "R1" 65+18	17.40
18	17.04′ Lt "R1" 64+90	17.50
19	16.97′ Lt "R1" 64+69	17.50
20	16.96′ Lt "R1" 64+49	17.40
21	16.96′ Lt "R1" 64+30	17.30
22	18.87′ Lt "R1" 64+09	17.40
23	23.46′ Lt "R1" 63+79	17.85
24	23.43′ Lt "R1" 63+39	18.60
25	24.92′ Lt "R1" 65+16	17.30
26	25.05′ Lt "R1" 64+98	17.20
27	24.98′ Lt "R1" 64+72	17.10
28	24.96′ Lt "R1" 64+51	17.00
29	24.96′ Lt "R1" 64+31	16.90
30	25.61′ Lt "R1" 64+12	17.30
31	28.73′ Lt "R1" 63+82	17.70
32	27.05′ Lt "R1" 63+46	18.41
33	21.02′ Lt "R1" 63+21	18.80
34	16.42′ Lt "R1" 63+00	19.22
35	13.30′ Lt "R1" 62+82	19.58
36	11.15′ Lt "R1" 62+62	19.98

FLOWLINE/ PAVEMENT ELEVATIONS

No.	LOCATION	ELEVATION
37	9.00′ Lt "R1" 62+40	20.40
38	8.32′ Lt "R1" 62+33	20.55

Dist	COUNTY	ROUTE	POST MILES TOTAL PROJECT	SHEET No.	TOTAL SHEETS
04	SM	101	0.8/1.1	12	136

REGISTERED CIVIL ENGINEER — 9-15-22 DATE

PLANS APPROVAL DATE — 9-30-22

REGISTERED PROFESSIONAL ENGINEER — DANIEL HO No. 50914 Exp. 9-30-23 CIVIL — STATE OF CALIFORNIA

THE STATE OF CALIFORNIA OR ITS OFFICERS OR AGENTS SHALL NOT BE RESPONSIBLE FOR THE ACCURACY OR COMPLETENESS OF SCANNED COPIES OF THIS PLAN SHEET.

AECOM
4 N. SECOND St
SUITE 675
SAN JOSE, CA 95113

CITY OF EAST PALO ALTO
1960 TATE STREET
EAST PALO ALTO, CA 94303

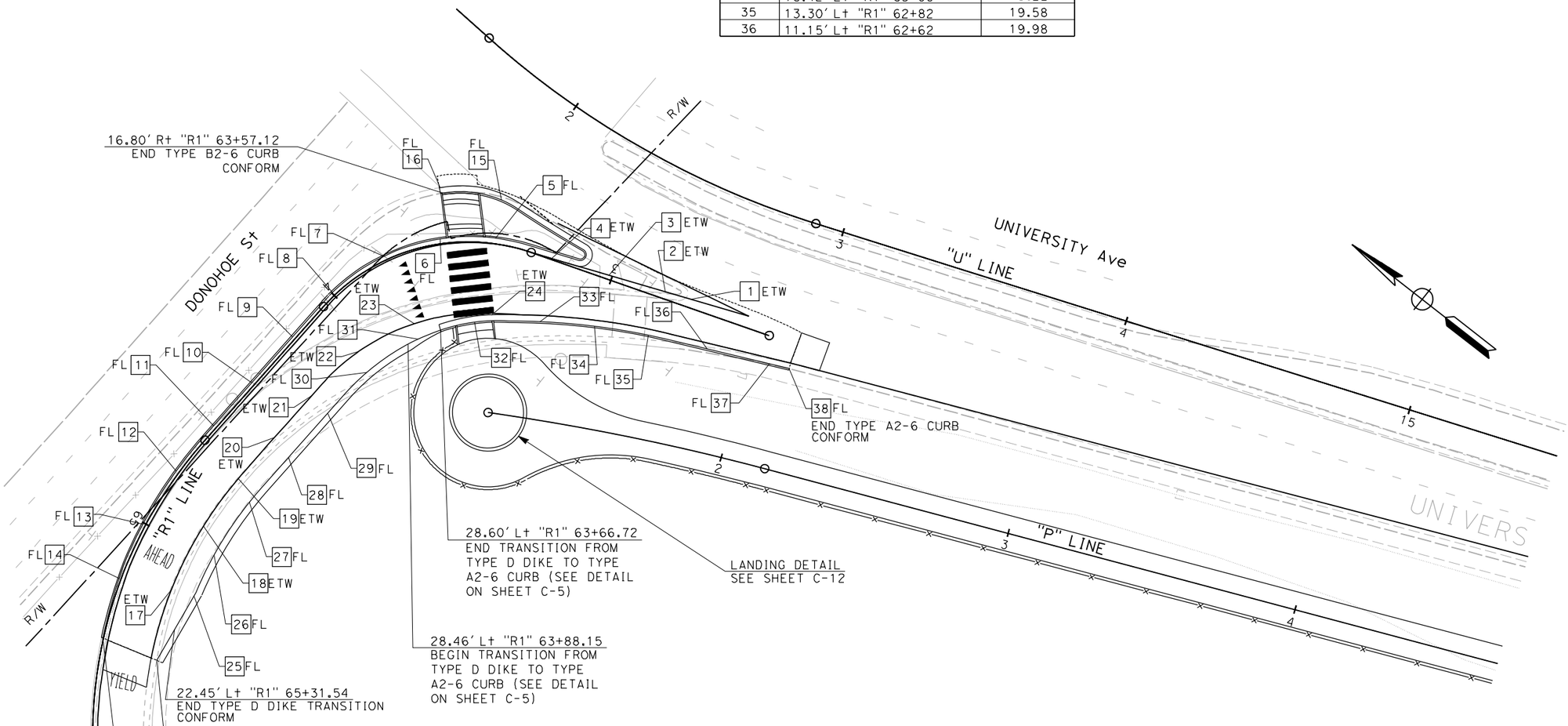

CONSTRUCTION DETAILS AND PAVEMENT ELEVATION PLAN

SCALE 1" = 20′

APPROVED FOR PAVEMENT ELEVATION WORK ONLY

C-3

REVISED BY	DATE REVISED
JC	9-15-22

CALCULATED-DESIGNED BY
CHECKED BY
JOSE CORONEL
DANIEL HO
CONSULTANT FUNCTIONAL SUPERVISOR
HOWARD MICHAEL
STATE OF CALIFORNIA - DEPARTMENT OF TRANSPORTATION
Caltrans

LAST REVISION 9-15-22
DATE PLOTTED => 10/26/2022
TIME PLOTTED => 1:42:39 PM

BORDER LAST REVISED 8/1/2016
USERNAME => jose.coronel
DGN FILE => 04000007591ga003.dgn
RELATIVE BORDER SCALE IS IN INCHES 0 1 2 3
UNIT 0703
PROJECT NUMBER & PHASE 04000007591

NOTE:

FOR ACCURATE RIGHT OF WAY DATA, CONTACT
RIGHT OF WAY ENGINEERING AT THE DISTRICT OFFICE.

PAVEMENT ELEVATIONS

No. ☐	LOCATION	ELEVATION
58	66.88′ Rt "R2" 81+60	16.97
59	65.80′ Rt "R2" 81+80	17.73
60	64.18′ Rt "R2" 82+00	18.37
61	61.62′ Rt "R2" 82+20	19.18
62	60.16′ Rt "R2" 82+40	20.6
63	60.23′ Rt "R2" 82+60	22.39
64	60.30′ Rt "R2" 82+80	23.91
65	60.38′ Rt "R2" 83+00	25.32
66	63.90′ Rt "R2" 83+20	26.67
67	68.92′ Rt "R2" 83+40	27.60
68	74.05′ Rt "R2" 83+60	28.92
69	79.70′ Rt "R2" 83+80	29.81
70	92.27′ Rt "R2" 84+00	32.56
71	111.42′ Rt "R2" 84+10	33.58
72	123.23′ Rt "R2" 84+15	34.42
73	137.39′ Rt "R2" 84+20	35.08
74	167.00′ Rt "R2" 84+27	35.58

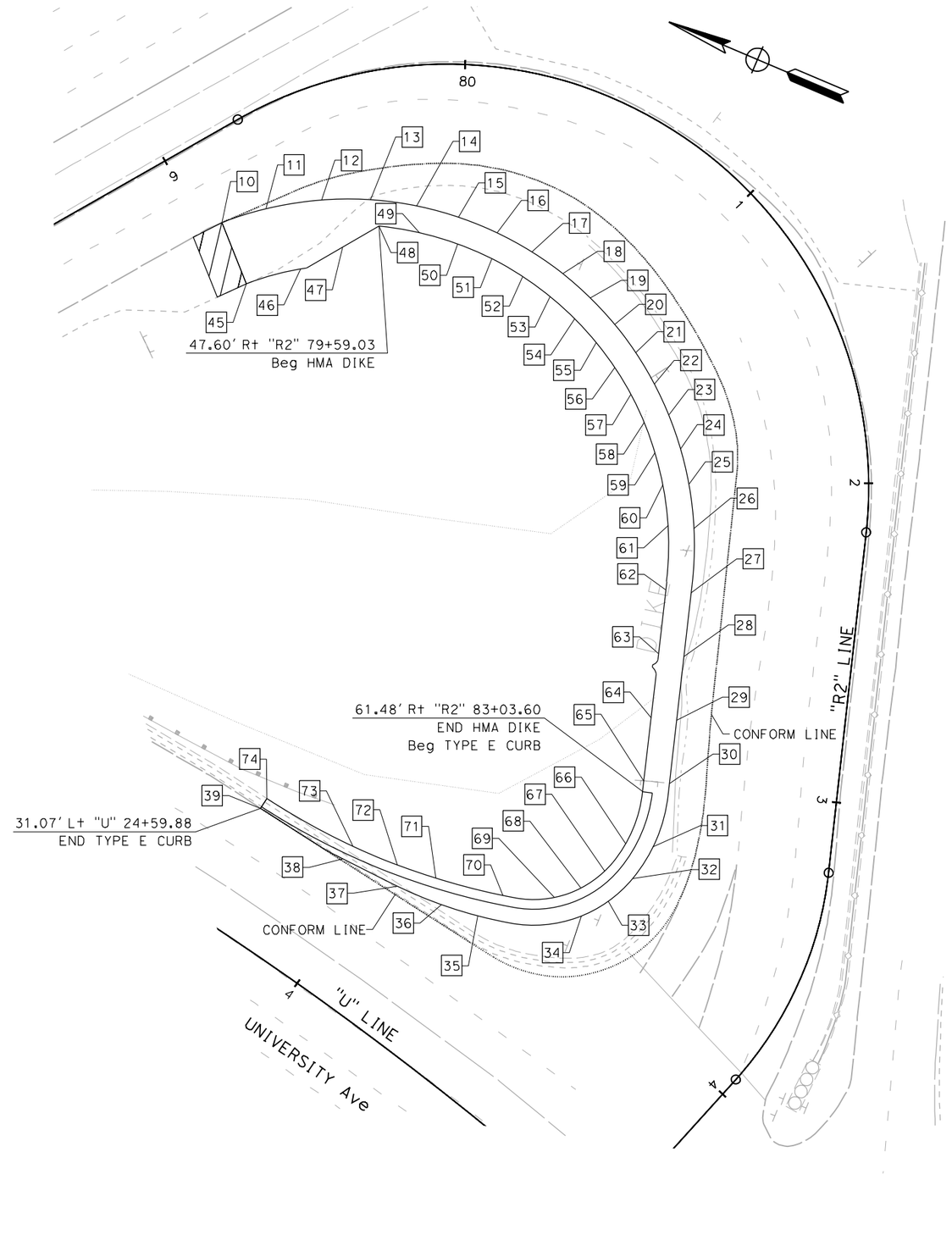

PAVEMENT ELEVATIONS

No. ☐	LOCATION	ELEVATION
10	25.50′ Rt "R2" 79+06	19.08
11	28.52′ Rt "R2" 79+20	18.92
12	34.15′ Rt "R2" 79+40	18.54
13	39.14′ Rt "R2" 79+60	18.08
14	43.63′ Rt "R2" 79+80	17.44
15	47.59′ Rt "R2" 80+00	16.59
16	51.01′ Rt "R2" 80+20	16.00
17	53.84′ Rt "R2" 80+40	15.80
18	56.08′ Rt "R2" 80+60	15.79
19	57.76′ Rt "R2" 80+80	15.90
20	58.87′ Rt "R2" 81+00	16.13
21	59.42′ Rt "R2" 81+20	16.44
22	59.42′ Rt "R2" 81+40	16.82
23	58.85′ Rt "R2" 81+60	17.85
24	57.72′ Rt "R2" 81+80	18.61
25	56.06′ Rt "R2" 82+00	19.28
26	53.51′ Rt "R2" 82+20	20.11
27	52.16′ Rt "R2" 82+40	21.46
28	52.23′ Rt "R2" 82+60	23.08
29	52.30′ Rt "R2" 82+80	24.48
30	52.37′ Rt "R2" 83+00	25.75
31	55.31′ Rt "R2" 83+20	26.96
32	59.88′ Rt "R2" 83+40	27.79
33	64.53′ Rt "R2" 83+60	28.95
34	69.55′ Rt "R2" 83+80	29.81
35	93.90′ Rt "R2" 84+10	32.67
36	104.67′ Rt "R2" 84+15	33.59
37	118.84′ Rt "R2" 84+20	34.38
38	137.00′ Rt "R2" 84+25	35.02
39	166.60′ Rt "R2" 84+30	35.62
45	45.81′ Rt "R2" 79+03	17.53
46	50.13′ Rt "R2" 79+20	16.94
47	50.29′ Rt "R2" 79+40	17.17
48	47.88′ Rt "R2" 79+60	17.33
49	52.07′ Rt "R2" 79+80	16.63
50	55.97′ Rt "R2" 80+00	15.66
51	59.27′ Rt "R2" 80+20	15.03
52	62.04′ Rt "R2" 80+40	14.81
53	64.21′ Rt "R2" 80+60	14.8
54	65.82′ Rt "R2" 80+80	14.94
55	66.70′ Rt "R2" 81+00	15.17
56	67.42′ Rt "R2" 81+20	15.49
57	67.42′ Rt "R2" 81+40	15.86

Dist	COUNTY	ROUTE	POST MILES TOTAL PROJECT	SHEET No.	TOTAL SHEETS
04	SM	101	0.8/1.1	13	136

9-15-22
REGISTERED CIVIL ENGINEER DATE

9-30-22
PLANS APPROVAL DATE

REGISTERED PROFESSIONAL ENGINEER
DANIEL HO
No. 50914
Exp. 9-30-23
CIVIL
STATE OF CALIFORNIA

THE STATE OF CALIFORNIA OR ITS OFFICERS OR AGENTS SHALL NOT BE RESPONSIBLE FOR THE ACCURACY OR COMPLETENESS OF SCANNED COPIES OF THIS PLAN SHEET.

AECOM
4 N. SECOND St
SUITE 675
SAN JOSE, CA 95113

CITY OF EAST PALO ALTO
1960 TATE STREET
EAST PALO ALTO, CA 94303

CONSTRUCTION DETAILS AND PAVEMENT ELEVATIONS

SCALE 1" = 20′

C-4

APPROVED FOR PAVEMENT ELEVATION WORK ONLY

REVISED BY	DATE REVISED
JC	9-15-22

JOSE CORONEL — DANIEL HO — CALCULATED-DESIGNED BY — CHECKED BY

CONSULTANT FUNCTIONAL SUPERVISOR: HOWARD MICHAEL

STATE OF CALIFORNIA - DEPARTMENT OF TRANSPORTATION
Caltrans

LAST REVISION 9-15-22
DATE PLOTTED => 10/26/2022
TIME PLOTTED => 1:43:43 PM

BORDER LAST REVISED 8/1/2016
USERNAME => jose.coronel
DGN FILE => 04000007591ga004.dgn
RELATIVE BORDER SCALE IS IN INCHES 0 1 2 3
UNIT 0703
PROJECT NUMBER & PHASE 04000007591

Dist	COUNTY	ROUTE	POST MILES TOTAL PROJECT	SHEET No.	TOTAL SHEETS
04	SM	101	0.8/1.1	14	136

REGISTERED CIVIL ENGINEER — DATE: 9-15-22

PLANS APPROVAL DATE: 9-30-22

REGISTERED PROFESSIONAL ENGINEER — DANIEL HO — No. 50914 — Exp. 9-30-23 — CIVIL — STATE OF CALIFORNIA

THE STATE OF CALIFORNIA OR ITS OFFICERS OR AGENTS SHALL NOT BE RESPONSIBLE FOR THE ACCURACY OR COMPLETENESS OF SCANNED COPIES OF THIS PLAN SHEET.

AECOM
4 N. SECOND St
SUITE 675
SAN JOSE, CA 95113

CITY OF EAST PALO ALTO
1960 TATE STREET
EAST PALO ALTO, CA 94303

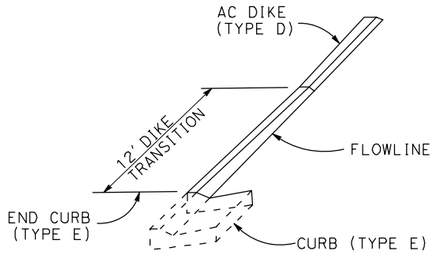

TRANSITION FROM CURB (TYPE E) TO AC DIKE (TYPE D)

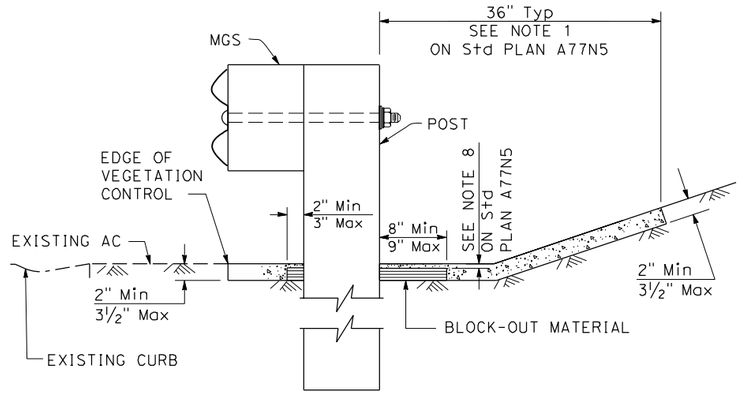

DETAIL 1

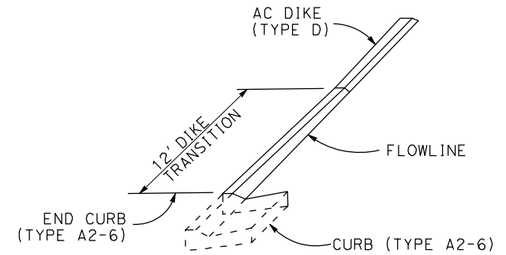

TRANSITION FROM CURB (TYPE A2-6) TO AC DIKE (TYPE D)

NOTES:

1. COUNTER SLOPES OF ADJOINING GUTTERS AND ROAD SURFACES IMMEDIATELY ADJACENT TO AND WITHIN 24 INCHES OF THE CURB RAMP SHALL NOT BE STEEPER THAN 1V:20H (5.0%). GUTTER PAN SLOPE SHALL NOT EXCEED 1" OF DEPTH FOR EACH 2'-0" OF WIDTH.
2. THE DETECTABLE WARNING SURFACE WILL BE A RECTANGLE AS SHOWN AT BACK OF CURB, UNLESS MODIFIED IN THE PROJECT PLANS. CURB RAMPS SHALL HAVE A DETECTABLE WARNING SURFACE THAT EXTENDS THE FULL WIDTH AND 3'-0" DEPTH OF THE RAMP. DETECTABLE WARNING SURFACES SHALL EXTEND THE FULL WIDTH OF THE RAMP EXCEPT A MAXIMUM GAP OF 1 INCH IS ALLOWED ON EACH SIDE OF THE RAMP. DETECTABLE WARNING SURFACES SHALL CONFORM TO THE REQUIREMENTS IN THE STANDARD SPECIFICATIONS. FOR DETAILS OF DETECTABLE WARNING SURFACES, SEE REVISED STANDARD PLAN RSP A88A.
3. WHERE AN ISLAND PASSAGEWAY LENGTH IS GREATER THAN OR EQUAL TO 6'-0", BUT LESS THAN 8'-0", EACH DETECTABLE WARNING SURFACE SHALL EXTEND THE FULL WIDTH AND 2'-0" DEPTH OF THE PASSAGEWAY LENGTH. WHERE AN ISLAND PASSAGEWAY LENGTH IS GREATER THAN OR EQUAL TO 8'-0", EACH DETECTABLE WARNING SURFACE SHALL EXTEND THE FULL WIDTH AND 3'-0" DEPTH OF THE PASSAGEWAY LENGTH. DETECTABLE WARNING SURFACES SHALL EXTEND THE FULL WIDTH OF THE ISLAND PASSAGEWAY EXCEPT A MAXIMUM GAP OF 1 INCH IS ALLOWED ON EACH SIDE OF THE PASSAGEWAY.

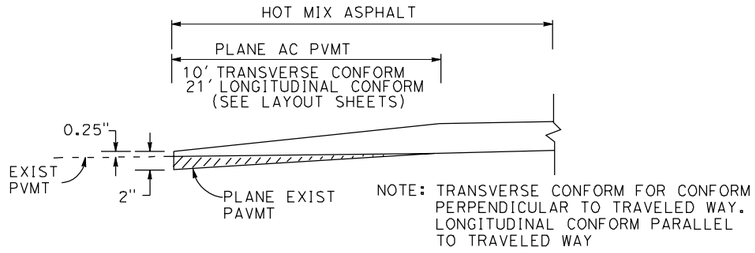

AC PLANING DETAIL

CONSTRUCTION DETAILS

APPROVED FOR PAVEMENT ELEVATION WORK ONLY

C-5

REVISED BY	DATE REVISED
JC	9-15-22

JOE SOOPROOL — DANIEL HO — CALCULATED-DESIGNED BY — CHECKED BY

CONSULTANT FUNCTIONAL SUPERVISOR: HOWARD MICHAEL

STATE OF CALIFORNIA - DEPARTMENT OF TRANSPORTATION — Caltrans

LAST REVISION 9-15-22 — DATE PLOTTED => 10/26/2022 — TIME PLOTTED => 1:46:00 PM

BORDER LAST REVISED 8/1/2016 — USERNAME => jose.coronel — DGN FILE => 04000007591ga005.dgn — RELATIVE BORDER SCALE IS IN INCHES 0 1 2 3 — UNIT 0703 — PROJECT NUMBER & PHASE 04000007591

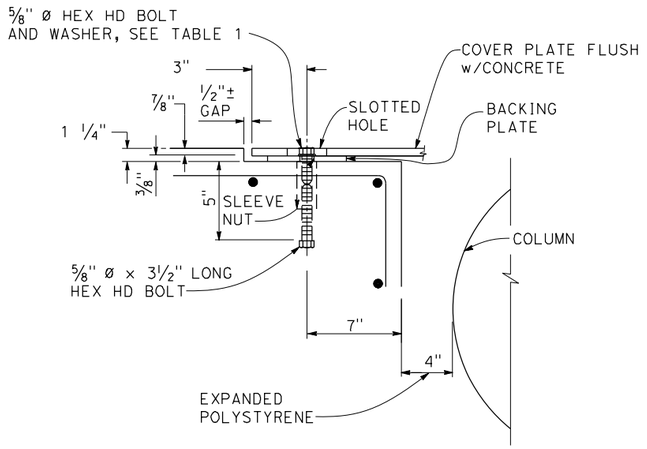

PLAN
DETAIL 1

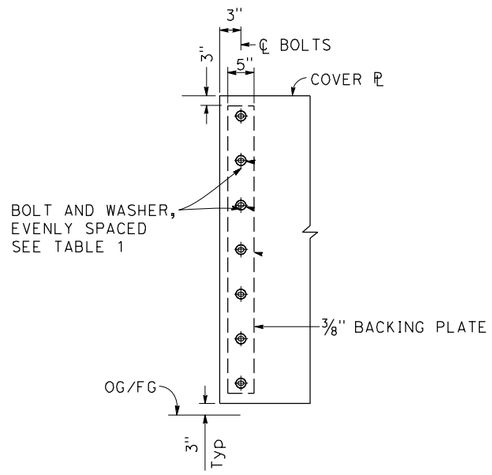

ELEVATION
DETAIL 2

TABLE 1		
L (ft)	PLATE * THICKNESS (in)	TOTAL NO. OF BOLTS
8'-6" Max	7/8	10

* PLATE STRUCTURAL STEEL SHALL BE ASTM A709 GRADE 50 UNLESS OTHERWISE NOTED.

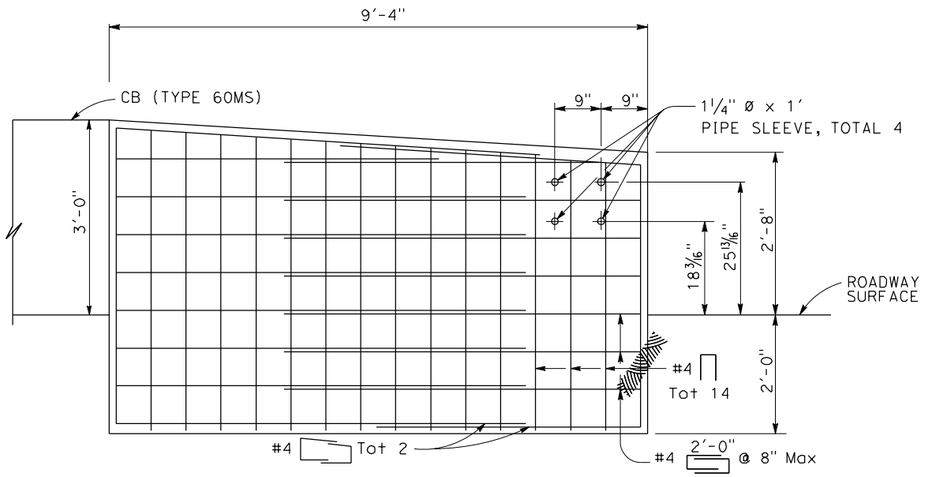

ELEVATION
CB (ANCHOR BLOCK) FOR TRANSITION RAILING CONNECTION

DETAIL A

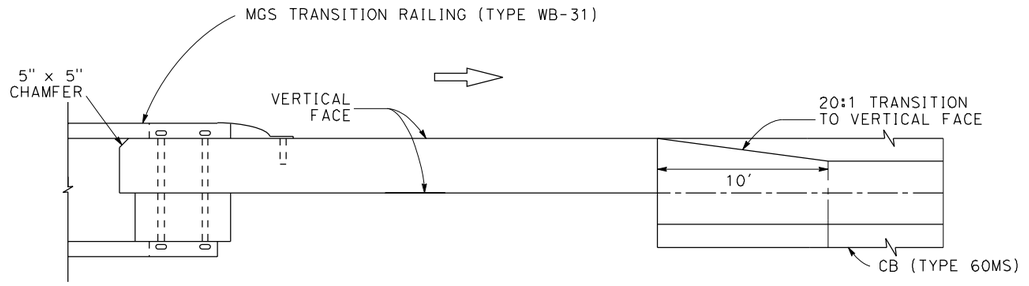

PLAN VIEW

NOTE:

1. FOR ADDITIONAL DETAILS OF A TYPICAL CONNECTION TO ANCHOR BLOCK SEE CONECTION DETAIL DD ON REVISED Std PLAN RSP A77U3.
2. FOR ADDITIONAL DETAILS OF MGS TRANSITION RAILING (TYPE WB-31) SEE REVISED Std PLAN RSP A77U4.

CONSTRUCTION DETAILS

NO SCALE

APPROVED FOR PAVEMENT ELEVATION WORK ONLY

C-6

Dist	COUNTY	ROUTE	POST MILES TOTAL PROJECT	SHEET No.	TOTAL SHEETS
04	SM	101	0.8/1.1	15	136

REGISTERED CIVIL ENGINEER — DATE 9-15-22

PLANS APPROVAL DATE 9-30-22

REGISTERED PROFESSIONAL ENGINEER — DANIEL HO No. 50914 Exp. 9-30-23 CIVIL — STATE OF CALIFORNIA

THE STATE OF CALIFORNIA OR ITS OFFICERS OR AGENTS SHALL NOT BE RESPONSIBLE FOR THE ACCURACY OR COMPLETENESS OF SCANNED COPIES OF THIS PLAN SHEET.

AECOM
4 N. SECOND St
SUITE 675
SAN JOSE, CA 95113

CITY OF EAST PALO ALTO
1960 TATE STREET
EAST PALO ALTO, CA 94303

REVISED BY	DATE REVISED
JC	9-15-22

CALCULATED-DESIGNED BY: JOSE CORONEL
CHECKED BY: DANIEL HO
CONSULTANT FUNCTIONAL SUPERVISOR: HOWARD MICHAEL
STATE OF CALIFORNIA - DEPARTMENT OF TRANSPORTATION

LAST REVISION 9-15-22
DATE PLOTTED => 10/26/2022
TIME PLOTTED => 11:46:50 PM

BORDER LAST REVISED 8/1/2016
USERNAME => jose.coronel
DGN FILE => 04000007591ga006.dgn
RELATIVE BORDER SCALE IS IN INCHES 0 1 2 3
UNIT 0703
PROJECT NUMBER & PHASE 04000007591

Dist	COUNTY	ROUTE	POST MILES TOTAL PROJECT	SHEET No.	TOTAL SHEETS
04	SM	101	0.8/1.1	16	136

REGISTERED CIVIL ENGINEER — DATE 9-15-22

PLANS APPROVAL DATE 9-30-22

REGISTERED PROFESSIONAL ENGINEER — DANIEL HO No. 50914 Exp. 9-30-23 CIVIL — STATE OF CALIFORNIA

THE STATE OF CALIFORNIA OR ITS OFFICERS OR AGENTS SHALL NOT BE RESPONSIBLE FOR THE ACCURACY OR COMPLETENESS OF SCANNED COPIES OF THIS PLAN SHEET.

AECOM
4 N. SECOND St
SUITE 675
SAN JOSE, CA 95113

CITY OF EAST PALO ALTO
1960 TATE STREET
EAST PALO ALTO, CA 94303

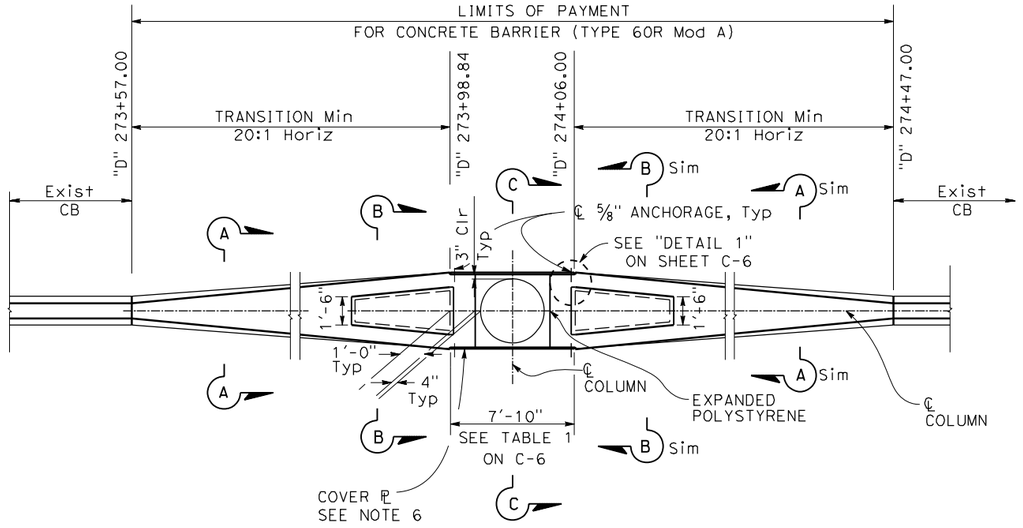

PLAN

CB (TYPE 60R Mod A)

("D" 274+01.93)

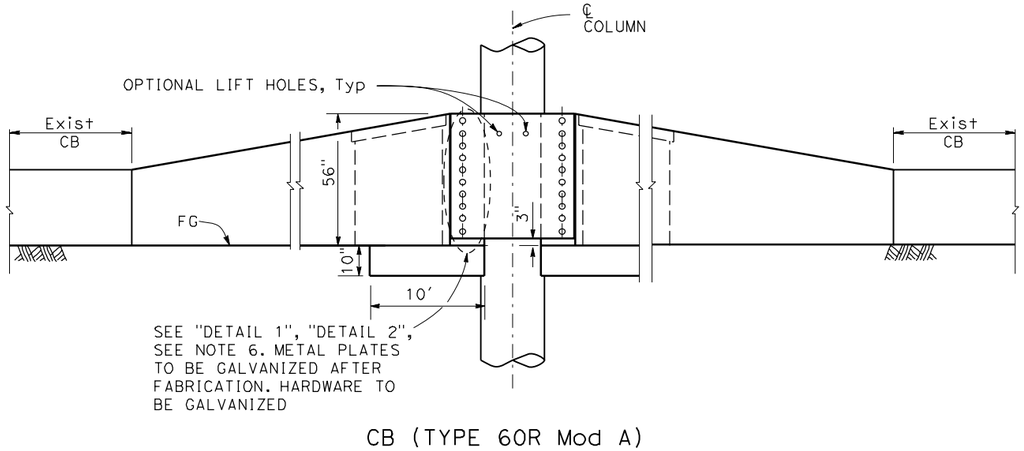

CB (TYPE 60R Mod A)

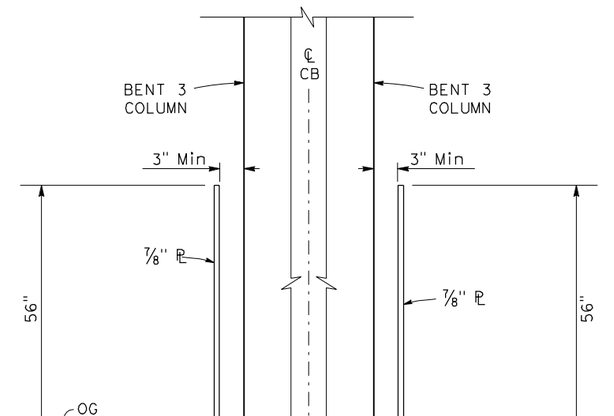

SECTION C-C

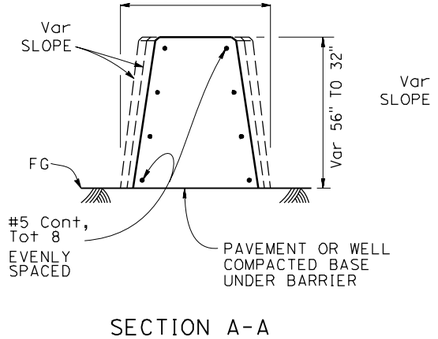

SECTION A-A

ELEVATION

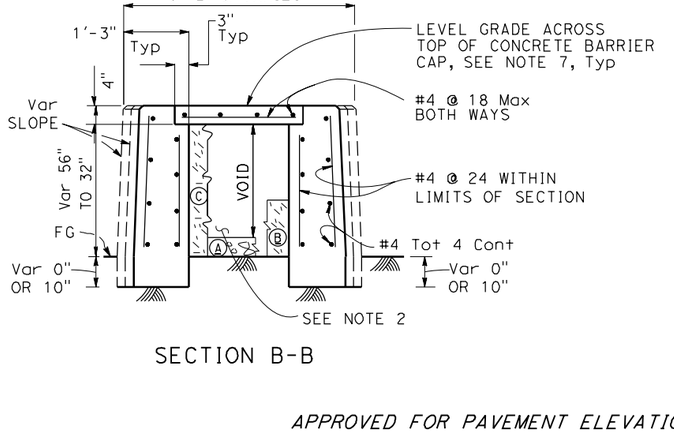

SECTION B-B

NOTES:

1. REINFORCING STEEL SHALL EXTEND CONTINUOUS THROUGH CONSTRUCTION JOINTS.
2. CONTRACTOR OPTIONS FOR FILL BETWEEN CONCRETE BARRIER WALLS:
   A. PLACE 4" PCC AT BASE BETWEEN CONCRETE BARRIER WALLS.
   B. PLACE 1'-0" OF GRANULAR MATERIAL AT BASE BETWEEN WALLS.
   C. PLACE GRANULAR MATERIAL FROM BASE TO BOTTOM OF 4" CAP.
   D. MONOLITHIC CONCRETE WITH FOAM BLOCKOUTS IS NOT PERMITTED.
5. SEE STANDARD PLAN A76E, CONCRETE BARRIER TYPE 60MG END ANCHORAGE DETAIL FOR REINFORCING STEEL.
6. FOR DETAIL 1, DETAIL 2 AND TABLE 1 SEE SHEET C-6.

CONSTRUCTION DETAILS

APPROVED FOR PAVEMENT ELEVATION WORK ONLY

C-7

REVISED BY	DATE REVISED
JC	9-15-22

CALCULATED-DESIGNED BY
CHECKED BY
JOSE CORONEL
DANIEL HO
CONSULTANT FUNCTIONAL SUPERVISOR
HOWARD MICHAEL
STATE OF CALIFORNIA - DEPARTMENT OF TRANSPORTATION
Caltrans

LAST REVISION 9-15-22
DATE PLOTTED => 10/26/2022
TIME PLOTTED => 1:47:36 PM

BORDER LAST REVISED 8/1/2016
USERNAME => jose.coronel
DGN FILE => 04000007591ga007.dgn
RELATIVE BORDER SCALE IS IN INCHES 0 1 2 3
UNIT 0703
PROJECT NUMBER & PHASE 04000007591

NOTE:

FOR ACCURATE RIGHT OF WAY DATA, CONTACT
RIGHT OF WAY ENGINEERING AT THE DISTRICT OFFICE.

LEGEND:

DETECTABLE WARNING SURFACE

ABBREVIATIONS:

BKSW BACK OF SIDEWALK

TOC TOP OF CURB

Dist	COUNTY	ROUTE	POST MILES TOTAL PROJECT	SHEET No.	TOTAL SHEETS
04	SM	101	0.8/1.1	17	136

9-15-22
REGISTERED CIVIL ENGINEER DATE

REGISTERED PROFESSIONAL ENGINEER
DANIEL HO
No. 50914
Exp. 9-30-23
CIVIL
STATE OF CALIFORNIA

9-30-22
PLANS APPROVAL DATE

THE STATE OF CALIFORNIA OR ITS OFFICERS OR AGENTS SHALL NOT BE RESPONSIBLE FOR THE ACCURACY OR COMPLETENESS OF SCANNED COPIES OF THIS PLAN SHEET.

AECOM
4 N. SECOND St
SUITE 675
SAN JOSE, CA 95113

CITY OF EAST PALO ALTO
1960 TATE STREET
EAST PALO ALTO, CA 94303

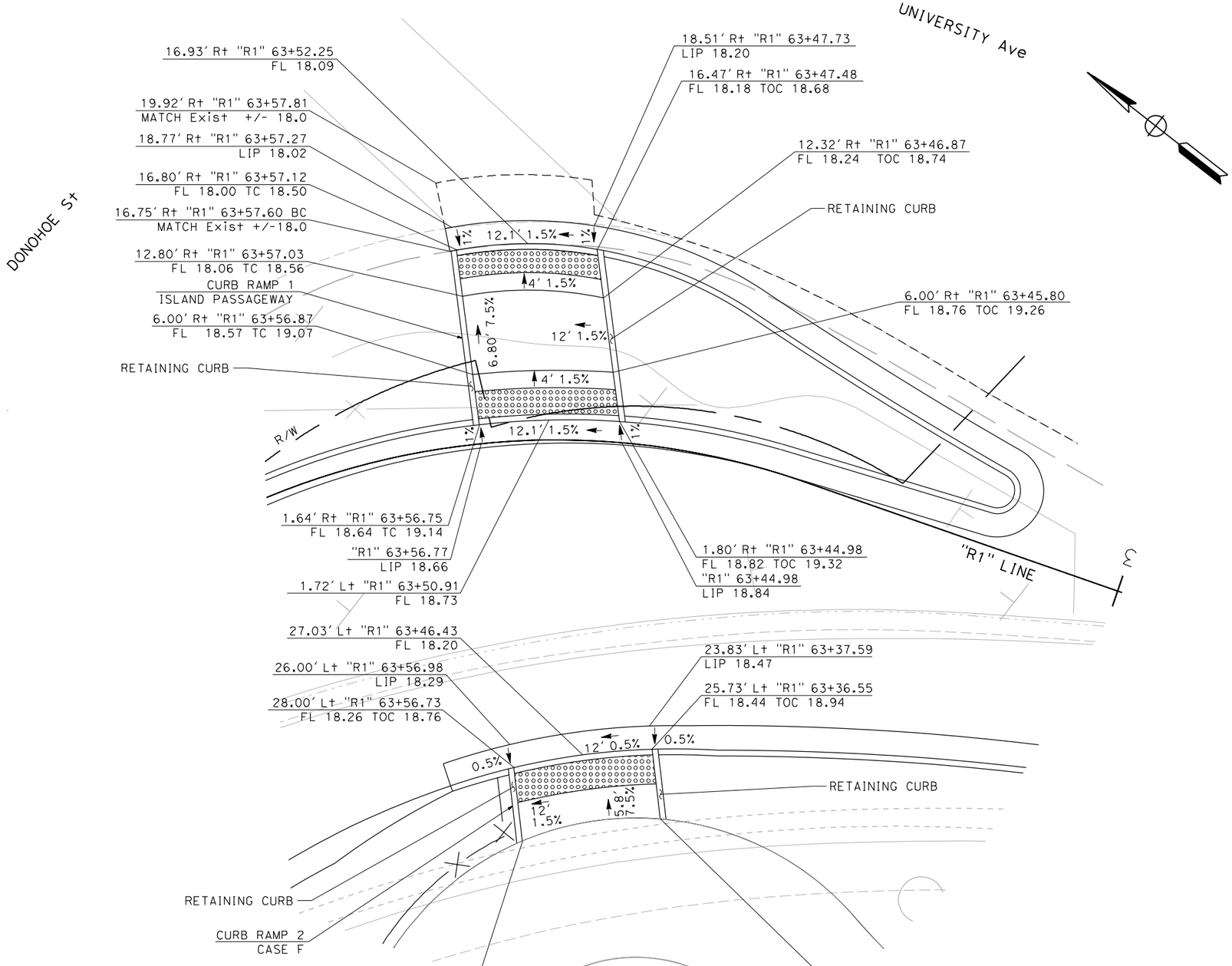

CONSTRUCTION DETAILS AND PAVEMENT ELEVATIONS

SCALE 1" = 10'

C-8

CALCULATED-DESIGNED BY: JC
CHECKED BY: DANIEL HO
REVISED BY: JOSE CORONEL
DATE REVISED: 9-15-22
CONSULTANT FUNCTIONAL SUPERVISOR: HOWARD MICHAEL
STATE OF CALIFORNIA - DEPARTMENT OF TRANSPORTATION

LAST REVISION 9-15-22
DATE PLOTTED => 10/26/2022
TIME PLOTTED => 1:49:02 PM

Dist	COUNTY	ROUTE	POST MILES TOTAL PROJECT	SHEET No.	TOTAL SHEETS
04	SM	101	0.8/1.1	18	136

REGISTERED CIVIL ENGINEER — 9-15-22 DATE

9-30-22 PLANS APPROVAL DATE

REGISTERED PROFESSIONAL ENGINEER — DANIEL HO No. 50914 Exp. 9-30-23 CIVIL — STATE OF CALIFORNIA

THE STATE OF CALIFORNIA OR ITS OFFICERS OR AGENTS SHALL NOT BE RESPONSIBLE FOR THE ACCURACY OR COMPLETENESS OF SCANNED COPIES OF THIS PLAN SHEET.

AECOM
4 N. SECOND St
SUITE 675
SAN JOSE, CA 95113

CITY OF EAST PALO ALTO
1960 TATE STREET
EAST PALO ALTO, CA 94303

NOTE:

FOR ACCURATE RIGHT OF WAY DATA, CONTACT RIGHT OF WAY ENGINEERING AT THE DISTRICT OFFICE.

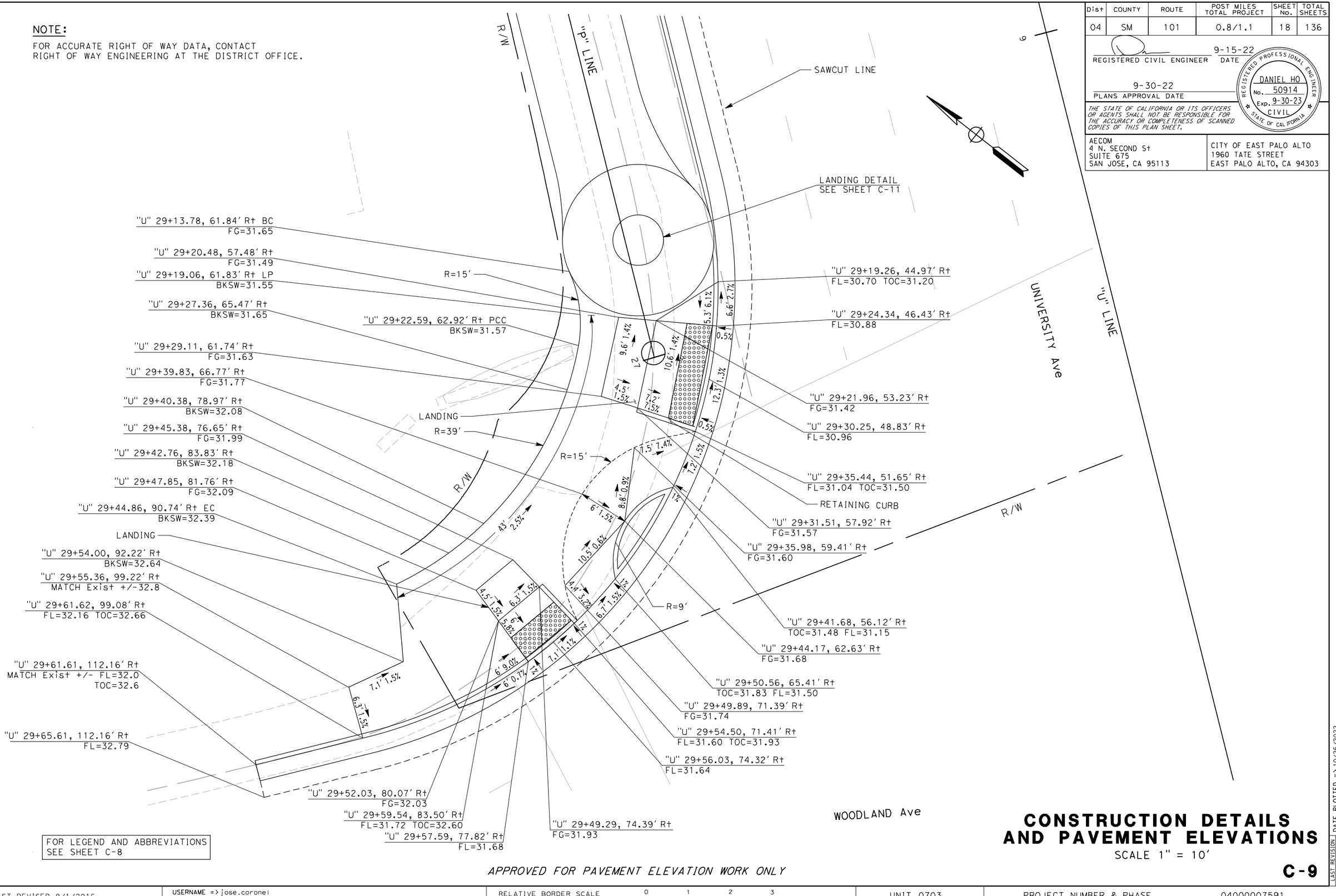

FOR LEGEND AND ABBREVIATIONS SEE SHEET C-8

APPROVED FOR PAVEMENT ELEVATION WORK ONLY

CONSTRUCTION DETAILS AND PAVEMENT ELEVATIONS

SCALE 1" = 10'

C-9

REVISED BY	DATE REVISED
JC	9-15-22

CALCULATED-DESIGNED BY: JOSE CORONEL
CHECKED BY: DANIEL HO

CONSULTANT FUNCTIONAL SUPERVISOR: HOWARD MICHAEL

STATE OF CALIFORNIA - DEPARTMENT OF TRANSPORTATION

LAST REVISION 9-15-22
DATE PLOTTED => 10/26/2022
TIME PLOTTED => 1:50:27 PM

BORDER LAST REVISED 8/1/2016 | USERNAME => jose.coronel | DGN FILE => 04000007591ga009.dgn | RELATIVE BORDER SCALE IS IN INCHES 0 1 2 3 | UNIT 0703 | PROJECT NUMBER & PHASE 04000007591

Dist	COUNTY	ROUTE	POST MILES TOTAL PROJECT	SHEET No.	TOTAL SHEETS
04	SM	101	0.8/1.1	19	136

REGISTERED CIVIL ENGINEER 9-15-22 DATE

9-30-22 PLANS APPROVAL DATE

REGISTERED PROFESSIONAL ENGINEER DANIEL HO No. 50914 Exp. 9-30-23 CIVIL STATE OF CALIFORNIA

THE STATE OF CALIFORNIA OR ITS OFFICERS OR AGENTS SHALL NOT BE RESPONSIBLE FOR THE ACCURACY OR COMPLETENESS OF SCANNED COPIES OF THIS PLAN SHEET.

AECOM
4 N. SECOND St
SUITE 675
SAN JOSE, CA 95113

CITY OF EAST PALO ALTO
1960 TATE STREET
EAST PALO ALTO, CA 94303

NOTE:

FOR ACCURATE RIGHT OF WAY DATA, CONTACT RIGHT OF WAY ENGINEERING AT THE DISTRICT OFFICE.

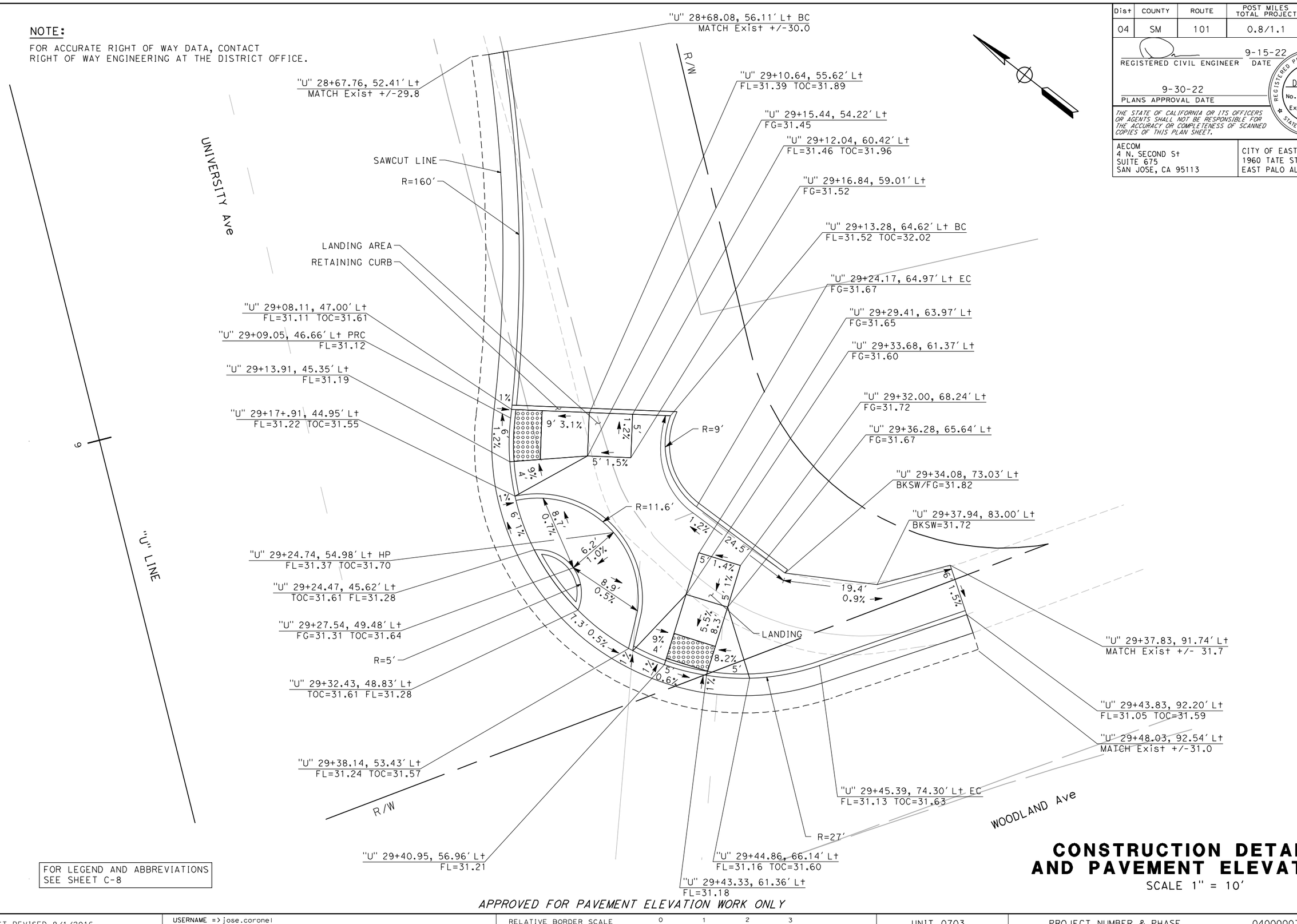

FOR LEGEND AND ABBREVIATIONS SEE SHEET C-8

APPROVED FOR PAVEMENT ELEVATION WORK ONLY

CONSTRUCTION DETAILS AND PAVEMENT ELEVATIONS

SCALE 1" = 10'

C-10

STATE OF CALIFORNIA - DEPARTMENT OF TRANSPORTATION

Caltrans

CONSULTANT FUNCTIONAL SUPERVISOR: HOWARD MICHAEL

CALCULATED-DESIGNED BY: JOSE CORONEL | CHECKED BY: DANIEL HO

REVISED BY: JC | DATE REVISED: 9-15-22

LAST REVISION 9-15-22 | DATE PLOTTED => 10/26/2022 | TIME PLOTTED => 1:51:12 PM

BORDER LAST REVISED 8/1/2016 | USERNAME => jose.coronel | DGN FILE => 04000007591ga010.dgn | RELATIVE BORDER SCALE IS IN INCHES 0 1 2 3 | UNIT 0703 | PROJECT NUMBER & PHASE 04000007591

NOTE:

FOR ACCURATE RIGHT OF WAY DATA, CONTACT
RIGHT OF WAY ENGINEERING AT THE DISTRICT OFFICE.

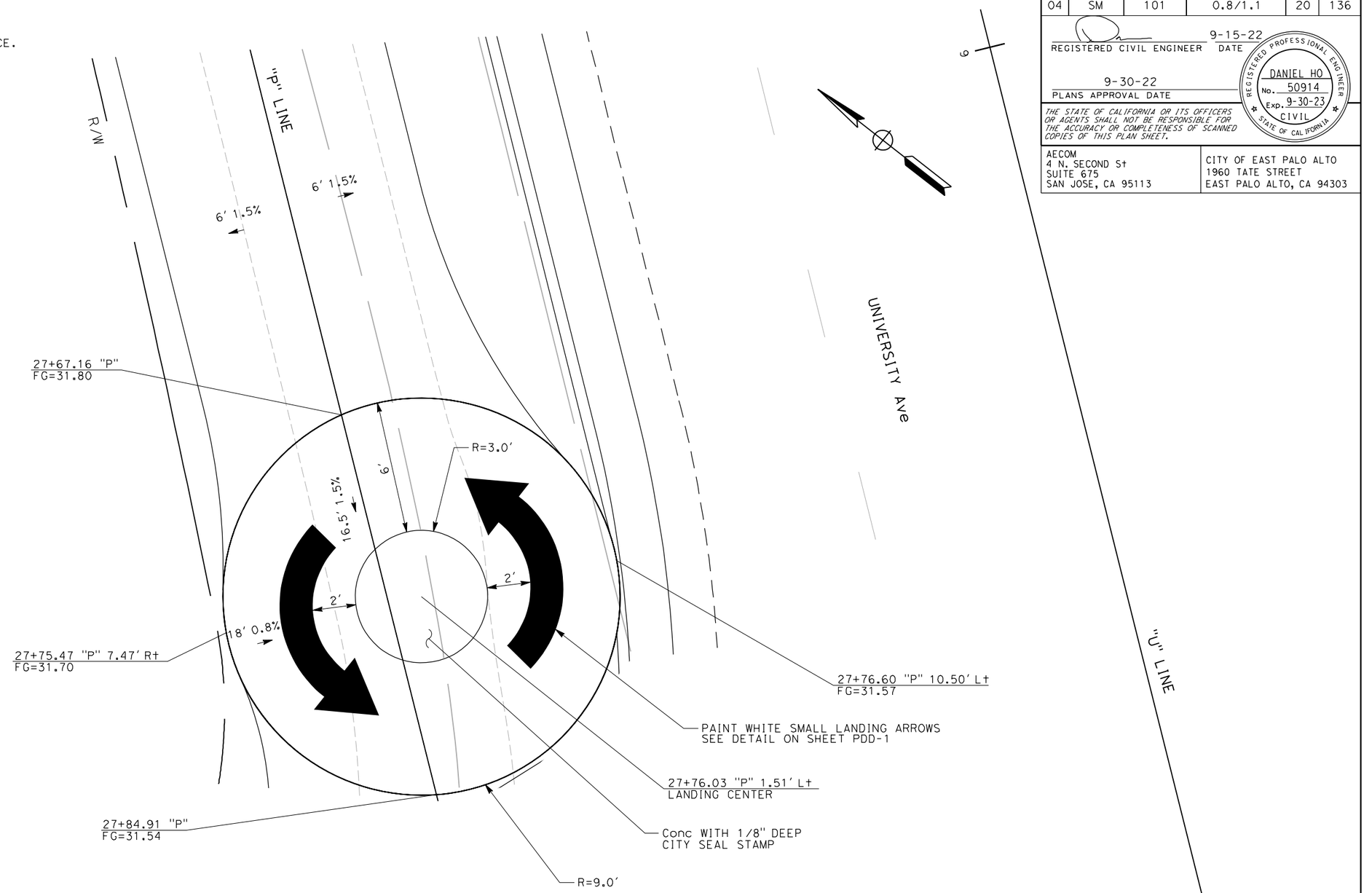

Dist	COUNTY	ROUTE	POST MILES TOTAL PROJECT	SHEET No.	TOTAL SHEETS
04	SM	101	0.8/1.1	20	136

9-15-22
REGISTERED CIVIL ENGINEER DATE

REGISTERED PROFESSIONAL ENGINEER
DANIEL HO
No. 50914
Exp. 9-30-23
CIVIL
STATE OF CALIFORNIA

9-30-22
PLANS APPROVAL DATE

THE STATE OF CALIFORNIA OR ITS OFFICERS OR AGENTS SHALL NOT BE RESPONSIBLE FOR THE ACCURACY OR COMPLETENESS OF SCANNED COPIES OF THIS PLAN SHEET.

AECOM
4 N. SECOND St
SUITE 675
SAN JOSE, CA 95113

CITY OF EAST PALO ALTO
1960 TATE STREET
EAST PALO ALTO, CA 94303

FOR LEGEND AND ABBREVIATIONS
SEE SHEET C-8

APPROVED FOR PAVEMENT ELEVATION WORK ONLY

CONSTRUCTION DETAILS AND PAVEMENT ELEVATIONS

SCALE 1" = 5'

C-11

REVISED BY	JC
DATE REVISED	9-15-22
CALCULATED-DESIGNED BY	JOSE CORONEL
CHECKED BY	DANIEL HO
CONSULTANT FUNCTIONAL SUPERVISOR	HOWARD MICHAEL

STATE OF CALIFORNIA - DEPARTMENT OF TRANSPORTATION
Caltrans

LAST REVISION 9-15-22
DATE PLOTTED => 10/26/2022
TIME PLOTTED => 1:52:34 PM

NOTE:

FOR ACCURATE RIGHT OF WAY DATA, CONTACT
RIGHT OF WAY ENGINEERING AT THE DISTRICT OFFICE.

Dist	COUNTY	ROUTE	POST MILES TOTAL PROJECT	SHEET No.	TOTAL SHEETS
04	SM	101	0.8/1.1	21	136

REGISTERED CIVIL ENGINEER — DATE 9-15-22

PLANS APPROVAL DATE 9-30-22

REGISTERED PROFESSIONAL ENGINEER — DANIEL HO No. 50914 Exp. 9-30-23 CIVIL — STATE OF CALIFORNIA

THE STATE OF CALIFORNIA OR ITS OFFICERS OR AGENTS SHALL NOT BE RESPONSIBLE FOR THE ACCURACY OR COMPLETENESS OF SCANNED COPIES OF THIS PLAN SHEET.

AECOM
4 N. SECOND St
SUITE 675
SAN JOSE, CA 95113

CITY OF EAST PALO ALTO
1960 TATE STREET
EAST PALO ALTO, CA 94303

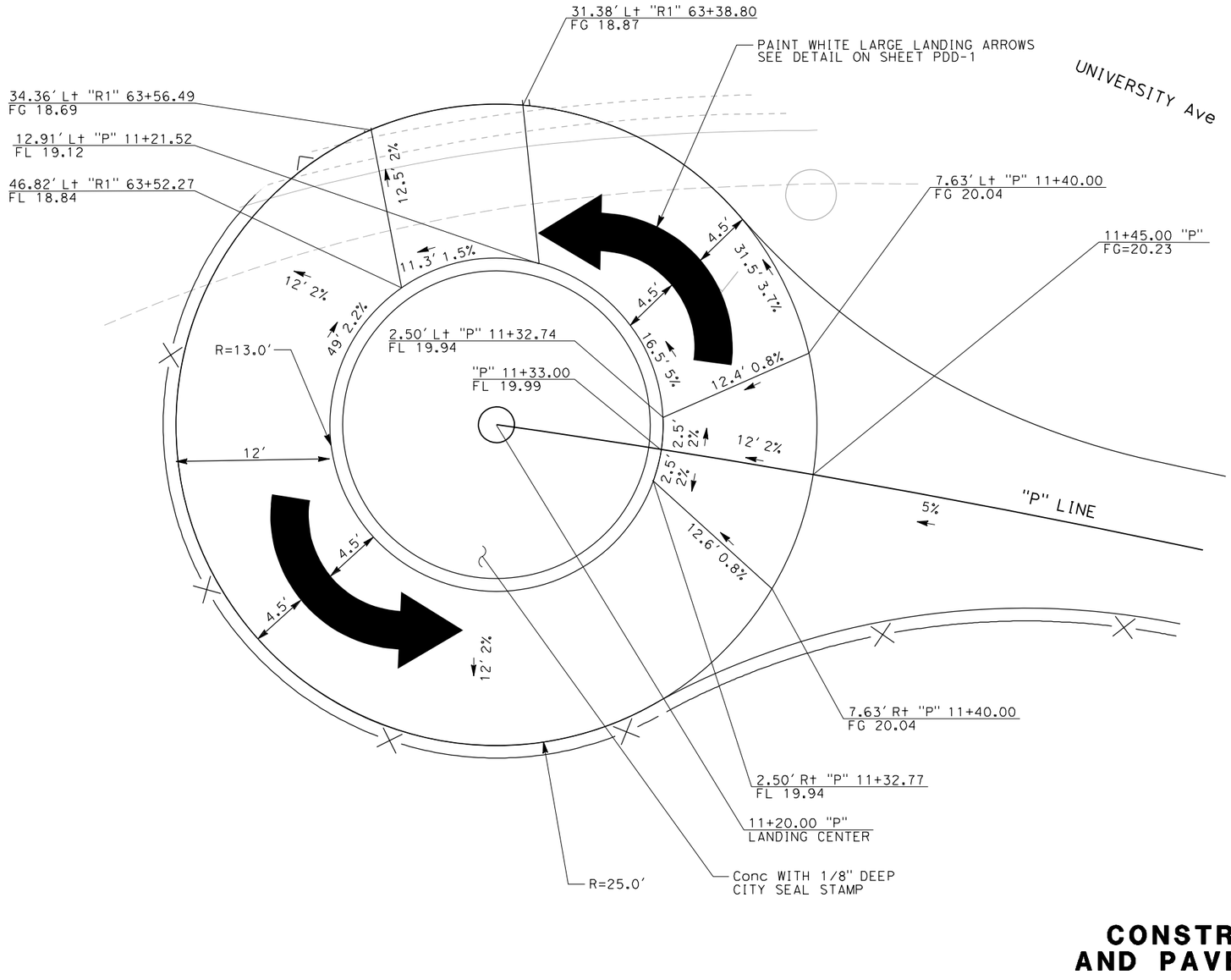

FOR LEGEND AND ABBREVIATIONS
SEE SHEET C-8

APPROVED FOR PAVEMENT ELEVATION WORK ONLY

CONSTRUCTION DETAILS AND PAVEMENT ELEVATIONS

SCALE 1" = 5'

C-12

REVISED BY	DATE REVISED
JC	9-15-22

CALCULATED-DESIGNED BY: JOSE CORONEL
CHECKED BY: DANIEL HO

CONSULTANT FUNCTIONAL SUPERVISOR: HOWARD MICHAEL

STATE OF CALIFORNIA - DEPARTMENT OF TRANSPORTATION
Caltrans

LAST REVISION 9-15-22
DATE PLOTTED => 10/26/2022
TIME PLOTTED => 13:53:15 PM

BORDER LAST REVISED 8/1/2016 | USERNAME => jose.coronel | DGN FILE => 04000007591ga0012.dgn | RELATIVE BORDER SCALE IS IN INCHES 0 1 2 3 | UNIT 0703 | PROJECT NUMBER & PHASE 04000007591

Dist	COUNTY	ROUTE	POST MILES TOTAL PROJECT	SHEET No.	TOTAL SHEETS
04	SM	101	0.8/1.1	22	136

REGISTERED CIVIL ENGINEER — DATE 9-15-22

PLANS APPROVAL DATE 9-30-22

REGISTERED PROFESSIONAL ENGINEER — DANIEL HO No. 50914 Exp. 9-30-23 CIVIL — STATE OF CALIFORNIA

THE STATE OF CALIFORNIA OR ITS OFFICERS OR AGENTS SHALL NOT BE RESPONSIBLE FOR THE ACCURACY OR COMPLETENESS OF SCANNED COPIES OF THIS PLAN SHEET.

AECOM
4 N. SECOND St
SUITE 675
SAN JOSE, CA 95113

CITY OF EAST PALO ALTO
1960 TATE STREET
EAST PALO ALTO, CA 94303

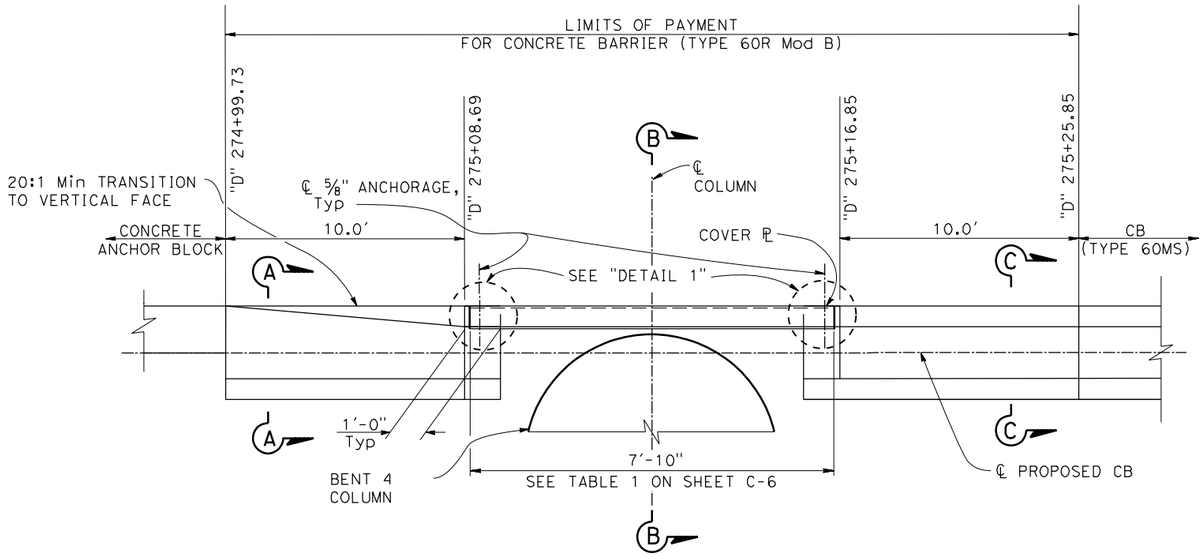

PLAN

CB (TYPE 60R Mod B)

("D" 275+12.77)

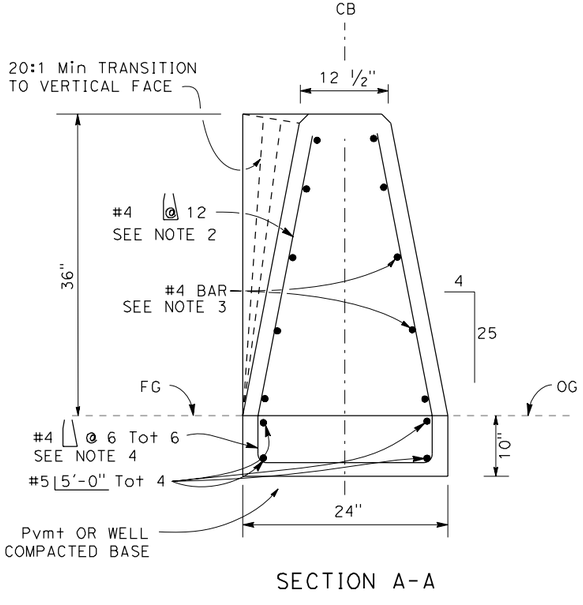

SECTION A-A

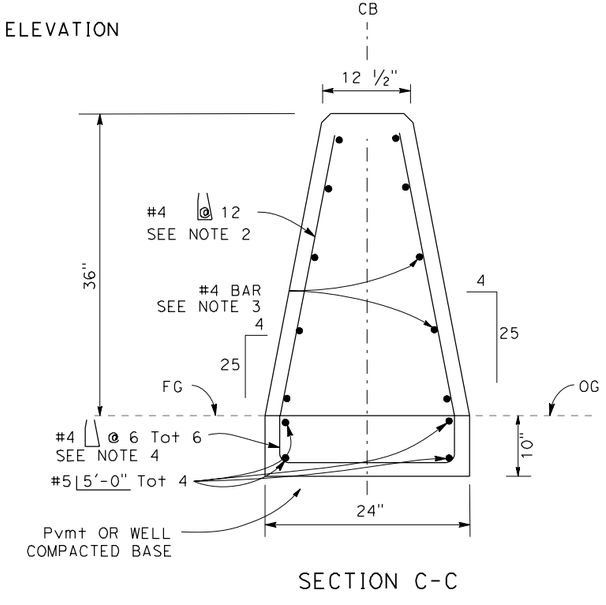

SECTION C-C

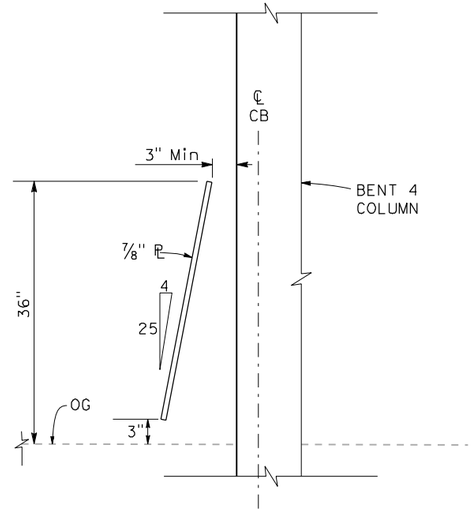

SECTION B-B

NOTES:

1. FOR DETAILS NOT SHOWN SEE Std PLAN A76G.
2. REINFORCING STEEL SHALL EXTEND CONTINUOUS THROUGH CONSTRUCTION JOINTS.
3. SEE REVISED Std PLAN RSP A76H, CONCRETE BARRIER TYPE 60MS END ANCHORAGE DETAIL FOR REINFORCING STEEL.
4. FOR DETAIL 1, DETAIL 2, AND TABLE 1 SEE SHEET C-6.
5. FOR CONCRETE ANCHOR BLOCK DETAIL, SEE DETAIL A ON SHEET C-6.

CONSTRUCTION DETAILS

C-13

REVISED BY	DATE REVISED
JC	9-15-22

CALCULATED-DESIGNED BY: JOSE CORONEL
CHECKED BY: DANIEL HO

CONSULTANT FUNCTIONAL SUPERVISOR: HOWARD MICHAEL

STATE OF CALIFORNIA - DEPARTMENT OF TRANSPORTATION

Caltrans

LAST REVISION 9-15-22
DATE PLOTTED => 10/26/2022
TIME PLOTTED => 1:54:08 PM

BORDER LAST REVISED 8/1/2016 | USERNAME => jose.coronel | DGN FILE => 04000007591ga0013.dgn | RELATIVE BORDER SCALE IS IN INCHES 0 1 2 3 | UNIT 0703 | PROJECT NUMBER & PHASE 04000007591

Dist	COUNTY	ROUTE	POST MILES TOTAL PROJECT	SHEET No.	TOTAL SHEETS
04	SM	101	0.8/1.1	23	136

REGISTERED CIVIL ENGINEER — 9-15-22 DATE

PLANS APPROVAL DATE — 9-30-22

REGISTERED PROFESSIONAL ENGINEER — DANIEL HO No. 50914 Exp. 9-30-23 CIVIL — STATE OF CALIFORNIA

THE STATE OF CALIFORNIA OR ITS OFFICERS OR AGENTS SHALL NOT BE RESPONSIBLE FOR THE ACCURACY OR COMPLETENESS OF SCANNED COPIES OF THIS PLAN SHEET.

AECOM
4 N. SECOND St
SUITE 675
SAN JOSE, CA 95113

CITY OF EAST PALO ALTO
1960 TATE STREET
EAST PALO ALTO, CA 94303

NOTES:

1. FOR ACCURATE RIGHT OF WAY DATA, CONTACT RIGHT OF WAY ENGINEERING AT THE DISTRICT OFFICE.
2. DRAINAGE INLET PROTECTION (SEE Std PLANS T61, T62, T63, T64) LOCATION AND TYPE TO BE DETERMINED BY CONTRACTOR AND VERIFIED BY THE ENGINEER
3. TEMPORARY CONCRETE WASHOUT AND TEMPORARY CONSTRUCTION ENTRANCE LOCATION TO BE DETERMINED BY CONTRACTOR AND VERIFIED BY THE ENGINEER

LEGEND:

- TEMPORARY DRAINAGE INLET PROTECTION, SEE NOTE 2
- TFR — TEMPORARY FIBER ROLL
- xx — TRSF — xx — TEMPORARY REINFORCED SILT FENCE

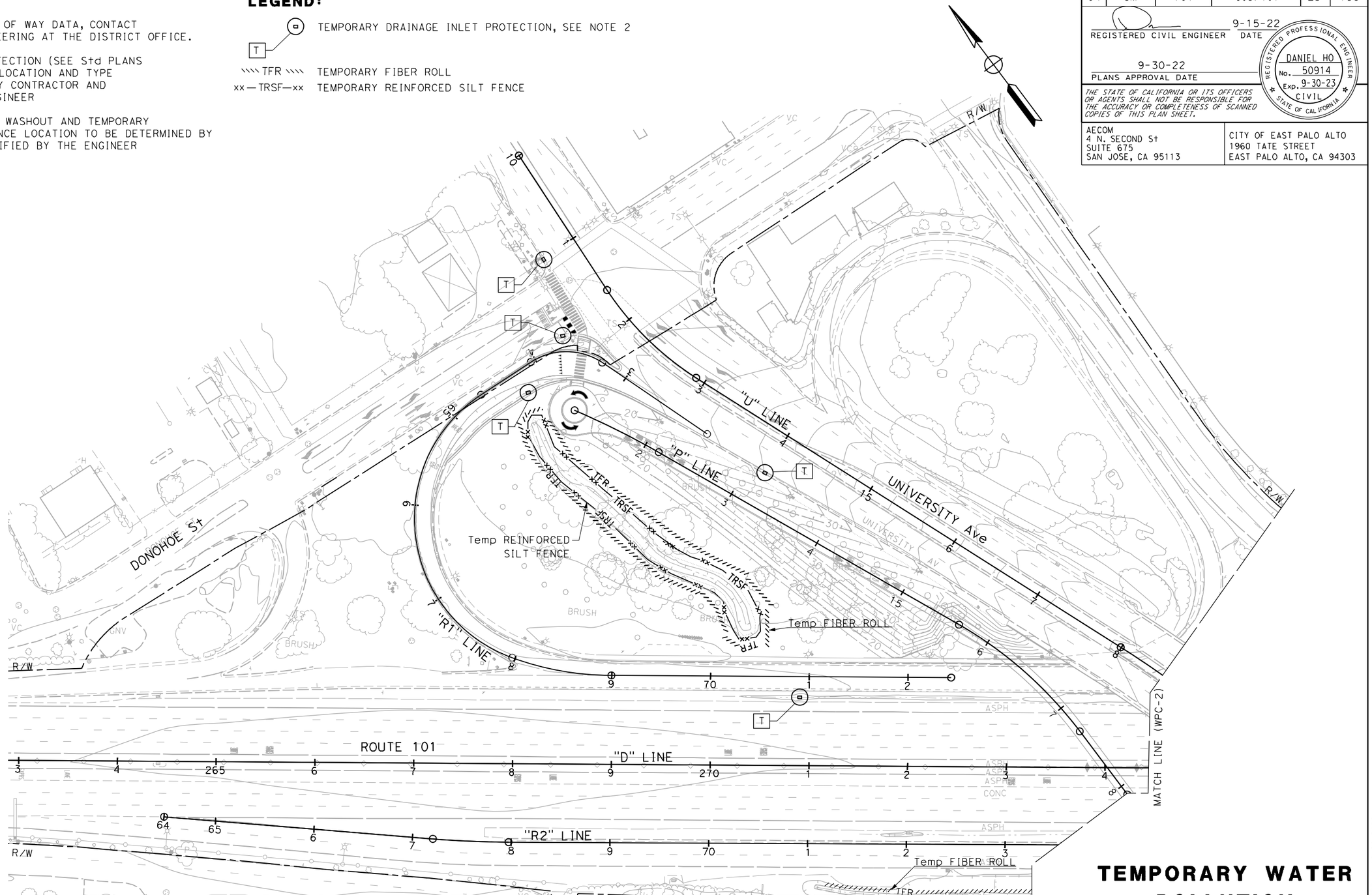

TEMPORARY WATER POLLUTION CONTROL PLAN

SCALE 1" = 50'

APPROVED FOR TEMPORARY WATER POLLUTION CONTROL WORK ONLY

WPC-1

REVISED BY	DATE REVISED
JC	9-15-22

CALCULATED-DESIGNED BY: JOSE CORONEL
CHECKED BY: DANIEL HO
CONSULTANT FUNCTIONAL SUPERVISOR: HOWARD MICHAEL
STATE OF CALIFORNIA - DEPARTMENT OF TRANSPORTATION

LAST REVISION 9-15-22
DATE PLOTTED => 10/26/2022
TIME PLOTTED => 1:57:38 PM

BORDER LAST REVISED 8/1/2016
USERNAME => jose.coronel
DGN FILE => 04000007591gb001.dgn
RELATIVE BORDER SCALE IS IN INCHES 0 1 2 3
UNIT 0703
PROJECT NUMBER & PHASE 04000007591

Dist	COUNTY	ROUTE	POST MILES TOTAL PROJECT	SHEET No.	TOTAL SHEETS
04	SM	101	0.8/1.1	24	136

REGISTERED CIVIL ENGINEER — 9-15-22 DATE

9-30-22
PLANS APPROVAL DATE

REGISTERED PROFESSIONAL ENGINEER — DANIEL HO No. 50914 Exp. 9-30-23 CIVIL — STATE OF CALIFORNIA

THE STATE OF CALIFORNIA OR ITS OFFICERS OR AGENTS SHALL NOT BE RESPONSIBLE FOR THE ACCURACY OR COMPLETENESS OF SCANNED COPIES OF THIS PLAN SHEET.

AECOM
4 N. SECOND St
SUITE 675
SAN JOSE, CA 95113

CITY OF EAST PALO ALTO
1960 TATE STREET
EAST PALO ALTO, CA 94303

NOTE:

FOR ACCURATE RIGHT OF WAY DATA, CONTACT
RIGHT OF WAY ENGINEERING AT THE DISTRICT OFFICE.

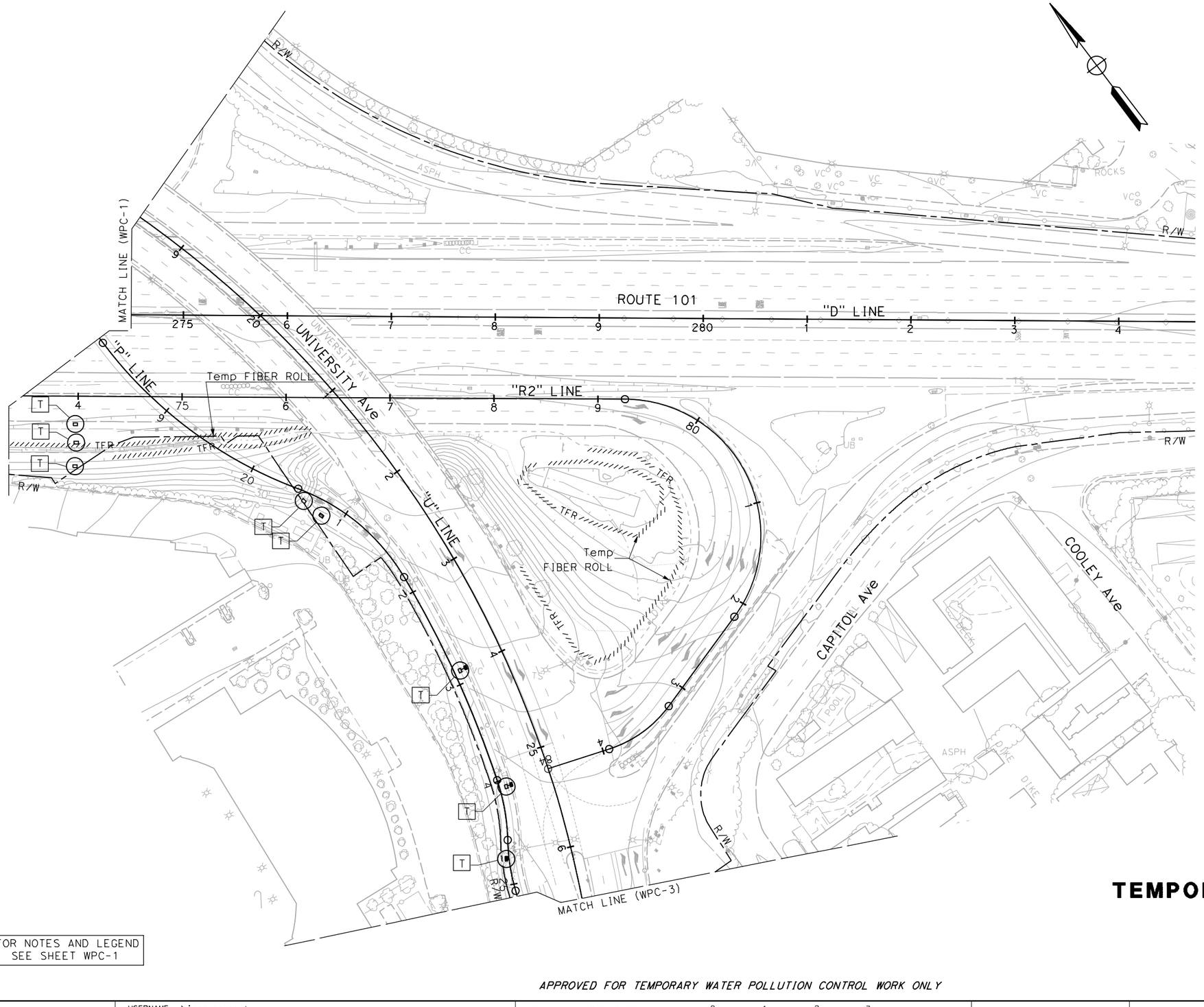

FOR NOTES AND LEGEND
SEE SHEET WPC-1

APPROVED FOR TEMPORARY WATER POLLUTION CONTROL WORK ONLY

TEMPORARY WATER POLLUTION CONTROL PLAN

SCALE 1" = 50'

WPC-2

CALCULATED-DESIGNED BY	REVISED BY	CONSULTANT FUNCTIONAL SUPERVISOR	STATE OF CALIFORNIA - DEPARTMENT OF TRANSPORTATION
CHECKED BY	DATE REVISED		
JOSE CORONEL	JC	HOWARD MICHAEL	Caltrans
DANIEL HO	9-15-22		

LAST REVISION 9-15-22 | DATE PLOTTED => 10/26/2022 | TIME PLOTTED => 1:58:49 PM

BORDER LAST REVISED 8/1/2016 | USERNAME => jose.coronel | DGN FILE => 04000007591gb002.dgn | RELATIVE BORDER SCALE IS IN INCHES 0 1 2 3 | UNIT 0703 | PROJECT NUMBER & PHASE 04000007591

NOTE:

FOR ACCURATE RIGHT OF WAY DATA, CONTACT
RIGHT OF WAY ENGINEERING AT THE DISTRICT OFFICE.

Dist	COUNTY	ROUTE	POST MILES TOTAL PROJECT	SHEET No.	TOTAL SHEETS
04	SM	101	0.8/1.1	25	136

9-15-22
REGISTERED CIVIL ENGINEER DATE

9-30-22
PLANS APPROVAL DATE

REGISTERED PROFESSIONAL ENGINEER
DANIEL HO
No. 50914
Exp. 9-30-23
CIVIL
STATE OF CALIFORNIA

THE STATE OF CALIFORNIA OR ITS OFFICERS OR AGENTS SHALL NOT BE RESPONSIBLE FOR THE ACCURACY OR COMPLETENESS OF SCANNED COPIES OF THIS PLAN SHEET.

AECOM
4 N. SECOND St
SUITE 675
SAN JOSE, CA 95113

CITY OF EAST PALO ALTO
1960 TATE STREET
EAST PALO ALTO, CA 94303

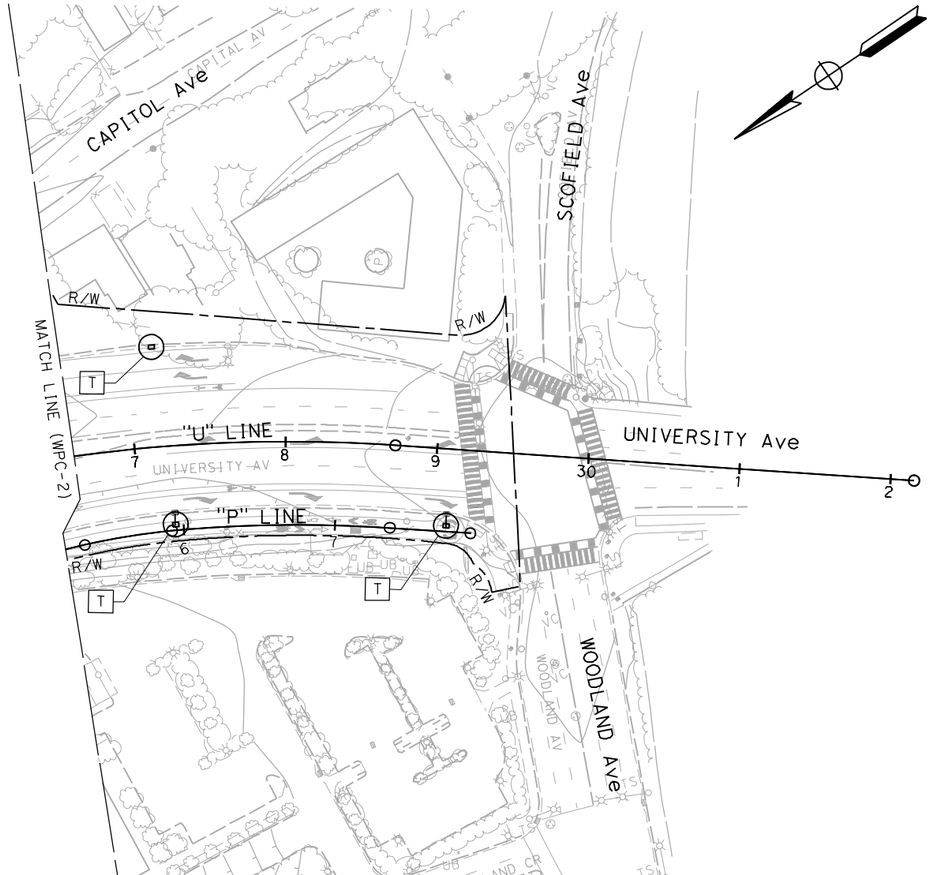

FOR NOTES AND LEGEND
SEE SHEET WPC-1

APPROVED FOR TEMPORARY WATER POLLUTION CONTROL WORK ONLY

TEMPORARY WATER POLLUTION CONTROL PLAN

SCALE 1" = 50'

WPC-3

STATE OF CALIFORNIA - DEPARTMENT OF TRANSPORTATION	CONSULTANT FUNCTIONAL SUPERVISOR: HOWARD MICHAEL	CALCULATED-DESIGNED BY: JOSE CORONEL	REVISED BY: JC
		CHECKED BY: DANIEL HO	DATE REVISED: 9-15-22

LAST REVISION 9-15-22
DATE PLOTTED => 10/26/2022
TIME PLOTTED => 2:00:22 PM

BORDER LAST REVISED 8/1/2016 | USERNAME => jose.coronel | DGN FILE => 04000007591gb003.dgn | RELATIVE BORDER SCALE IS IN INCHES 0 1 2 3 | UNIT 0703 | PROJECT NUMBER & PHASE 04000007591

Dist	COUNTY	ROUTE	POST MILES TOTAL PROJECT	SHEET No.	TOTAL SHEETS
04	SM	101	0.8/1.1	26	136

REGISTERED CIVIL ENGINEER 9-15-22 DATE

9-30-22
PLANS APPROVAL DATE

REGISTERED PROFESSIONAL ENGINEER
DANIEL HO
No. 50914
Exp. 9-30-23
CIVIL
STATE OF CALIFORNIA

THE STATE OF CALIFORNIA OR ITS OFFICERS OR AGENTS SHALL NOT BE RESPONSIBLE FOR THE ACCURACY OR COMPLETENESS OF SCANNED COPIES OF THIS PLAN SHEET.

AECOM
4 N. SECOND St
SUITE 675
SAN JOSE, CA 95113

CITY OF EAST PALO ALTO
1960 TATE STREET
EAST PALO ALTO, CA 94303

TEMPORARY WATER POLLUTION CONTORL QUANTITIES

SHEET No.	TEMPORARY FIBER ROLL	TEMPORARY REINFORCED SILT FENCE	TEMPORARY CONSTRUCTION ENTRANCE	TEMPORARY DRAINAGE INLET PROTECTION	TEMPORARY CONCRETE WASHOUT
	LF	LF	EA	EA	EA
WPC-1	730	705	1	5	2
WPC-2	1242		1	8	2
WPC-3			1	3	1
TOTAL	1972	705	3	16	5

TEMPORARY WATER POLLUTION CONTROL QUANTITIES

WPCQ-1

STATE OF CALIFORNIA - DEPARTMENT OF TRANSPORTATION
Caltrans®

CONSULTANT FUNCTIONAL SUPERVISOR: HOWARD MICHAEL
CALCULATED-DESIGNED BY: JOSE CORONEL
CHECKED BY: DANIEL HO
REVISED BY: JC
DATE REVISED: 9-15-22

LAST REVISION 9-15-22
DATE PLOTTED => 10/26/2022
TIME PLOTTED => 2:00:52 PM

NOTE:

FOR ACCURATE RIGHT OF WAY DATA, CONTACT
RIGHT OF WAY ENGINEERING AT THE DISTRICT OFFICE.

Dist	COUNTY	ROUTE	POST MILES TOTAL PROJECT	SHEET No.	TOTAL SHEETS
04	SM	101	0.8/1.1	27	136

REGISTERED CIVIL ENGINEER — DATE 9-15-22

PLANS APPROVAL DATE 9-30-22

REGISTERED PROFESSIONAL ENGINEER — DANIEL HO — No. 50914 — Exp. 9-30-23 — CIVIL — STATE OF CALIFORNIA

THE STATE OF CALIFORNIA OR ITS OFFICERS OR AGENTS SHALL NOT BE RESPONSIBLE FOR THE ACCURACY OR COMPLETENESS OF SCANNED COPIES OF THIS PLAN SHEET.

AECOM
4 N. SECOND St
SUITE 675
SAN JOSE, CA 95113

CITY OF EAST PALO ALTO
1960 TATE STREET
EAST PALO ALTO, CA 94303

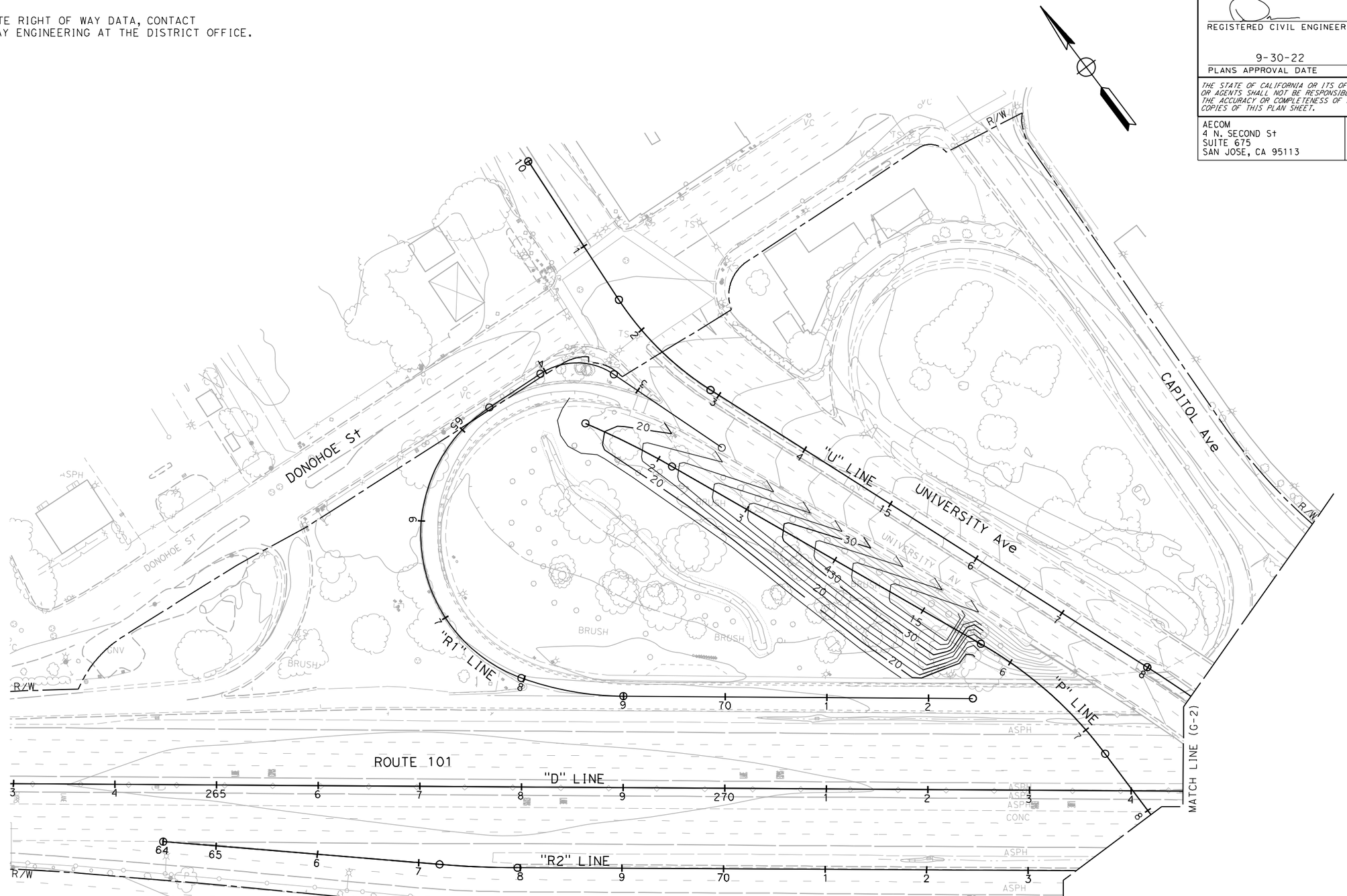

CONTOUR GRADING

SCALE 1" = 50'

G-1

APPROVED FOR CONTOUR GRADING WORK ONLY

REVISED BY	JC	
DATE REVISED	9-15-22	
JOSE CORONEL		
DANIEL HO		
CALCULATED-DESIGNED BY		
CHECKED BY		
CONSULTANT FUNCTIONAL SUPERVISOR	HOWARD MICHAEL	
STATE OF CALIFORNIA - DEPARTMENT OF TRANSPORTATION	Caltrans	

LAST REVISION 9-15-22
DATE PLOTTED => 10/26/2022
TIME PLOTTED => 21:38:10 PM

BORDER LAST REVISED 8/1/2016 | USERNAME => jose.coronel | DGN FILE => 04000007591ha001.dgn | RELATIVE BORDER SCALE IS IN INCHES 0 1 2 3 | UNIT 0703 | PROJECT NUMBER & PHASE 04000007591

Dist	COUNTY	ROUTE	POST MILES TOTAL PROJECT	SHEET No.	TOTAL SHEETS
04	SM	101	0.8/1.1	28	136

REGISTERED CIVIL ENGINEER — 9-15-22 DATE

9-30-22
PLANS APPROVAL DATE

REGISTERED PROFESSIONAL ENGINEER — DANIEL HO No. 50914 Exp. 9-30-23 CIVIL — STATE OF CALIFORNIA

THE STATE OF CALIFORNIA OR ITS OFFICERS OR AGENTS SHALL NOT BE RESPONSIBLE FOR THE ACCURACY OR COMPLETENESS OF SCANNED COPIES OF THIS PLAN SHEET.

AECOM
4 N. SECOND St
SUITE 675
SAN JOSE, CA 95113

CITY OF EAST PALO ALTO
1960 TATE STREET
EAST PALO ALTO, CA 94303

NOTE:

FOR ACCURATE RIGHT OF WAY DATA, CONTACT
RIGHT OF WAY ENGINEERING AT THE DISTRICT OFFICE.

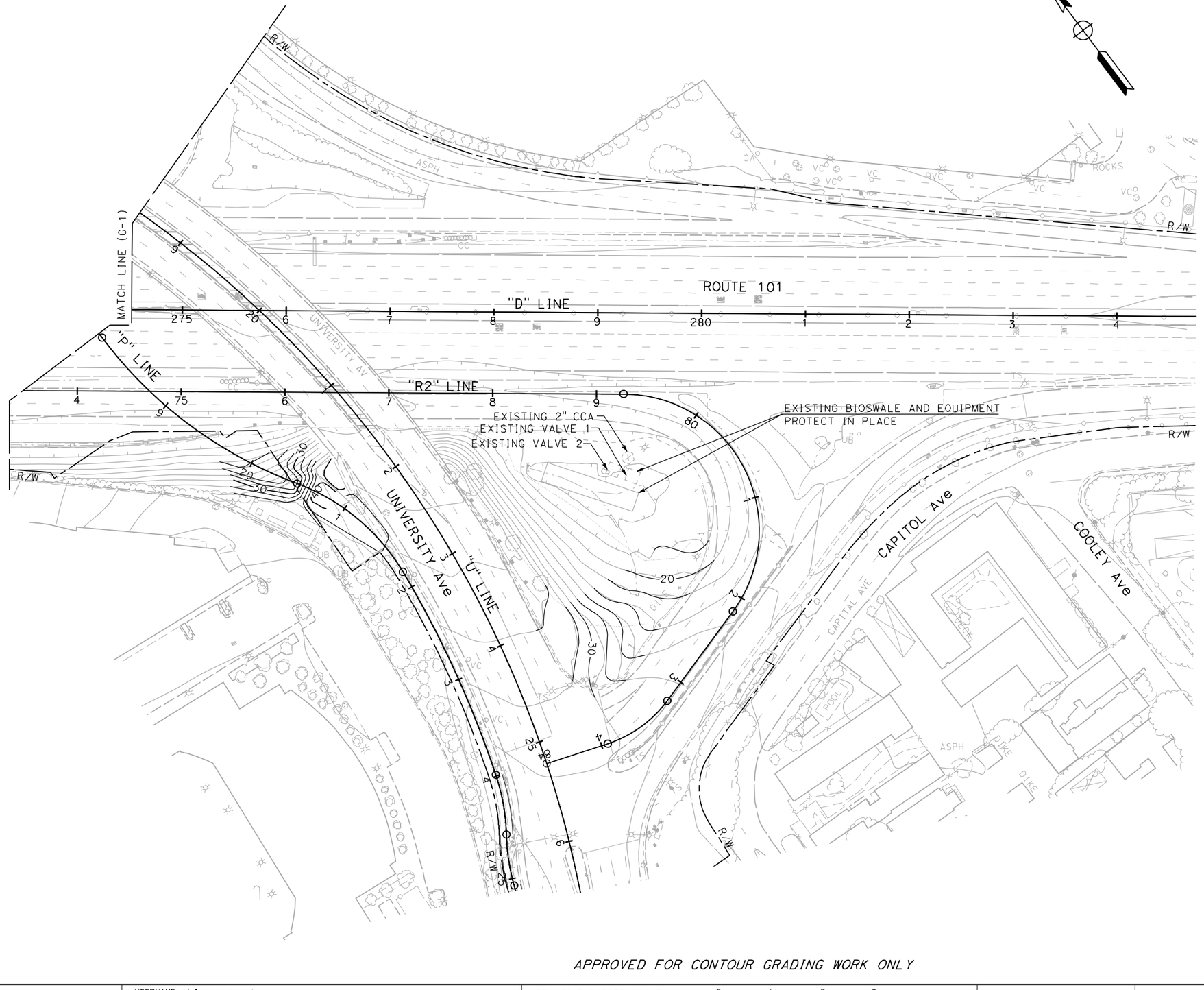

APPROVED FOR CONTOUR GRADING WORK ONLY

CONTOUR GRADING

SCALE 1" = 50'

G-2

REVISED BY	JC
DATE REVISED	9-15-22
CALCULATED-DESIGNED BY	JOSE CORONEL
CHECKED BY	DANIEL HO
CONSULTANT FUNCTIONAL SUPERVISOR	HOWARD MICHAEL
STATE OF CALIFORNIA - DEPARTMENT OF TRANSPORTATION	Caltrans

LAST REVISION 9-15-22
DATE PLOTTED => 10/26/2022
TIME PLOTTED => 2:39:29 PM

BORDER LAST REVISED 8/1/2016
USERNAME => jose.coronel
DGN FILE => 040000075911ha002.dgn
RELATIVE BORDER SCALE IS IN INCHES 0 1 2 3
UNIT 0703
PROJECT NUMBER & PHASE 04000007591

Dist	COUNTY	ROUTE	POST MILES TOTAL PROJECT	SHEET No.	TOTAL SHEETS
04	SM	101	0.8/1.1	29	136

9-15-22
REGISTERED CIVIL ENGINEER DATE

9-30-22
PLANS APPROVAL DATE

REGISTERED PROFESSIONAL ENGINEER
DANIEL HO
No. 50914
Exp. 9-30-23
CIVIL
STATE OF CALIFORNIA

THE STATE OF CALIFORNIA OR ITS OFFICERS OR AGENTS SHALL NOT BE RESPONSIBLE FOR THE ACCURACY OR COMPLETENESS OF SCANNED COPIES OF THIS PLAN SHEET.

AECOM
4 N. SECOND St
SUITE 675
SAN JOSE, CA 95113

CITY OF EAST PALO ALTO
1960 TATE STREET
EAST PALO ALTO, CA 94303

NOTES:

1. FOR ACCURATE RIGHT OF WAY DATA, CONTACT RIGHT OF WAY ENGINEERING AT THE DISTRICT OFFICE.
2. STATION AND OFFSET REFERENCE LOCATIONS FOR DRAINAGE STRUCTURES ARE SHOWN ON DRAINAGE PROFILES.
3. FOR CONCRETE INLET DEPRESSION DETAILS SEE SHEET DD-1 AND Std PLAN D78B.
4. LOCATIONS OF EXISTING DRAINAGE FACILITIES SHOWN ON PLANS ARE APPROXIMATE. PRIOR TO CONSTRUCTION, THE CONTRACTOR SHALL FIELD VERIFY THE LOCATIONS AND FLOW LINES OF EXISTING DRAINAGE FACILITIES. ANY DISCREPANCY SHALL BE BROUGHT TO THE ATTENTION OF THE ENGINEER.
5. INFORMATION AND LOCATIONS OF UTILITY FACILITIES ARE SHOWN ON THE UTILITY PLANS.
6. FOR STANDARD GUTTER DEPRESSION DETAILS SEE Std PLAN D78A.

ABBREVIATIONS:

CID	CONCRETE INLET DEPRESSION
SGD	STANDARD GUTTER DEPRESSION

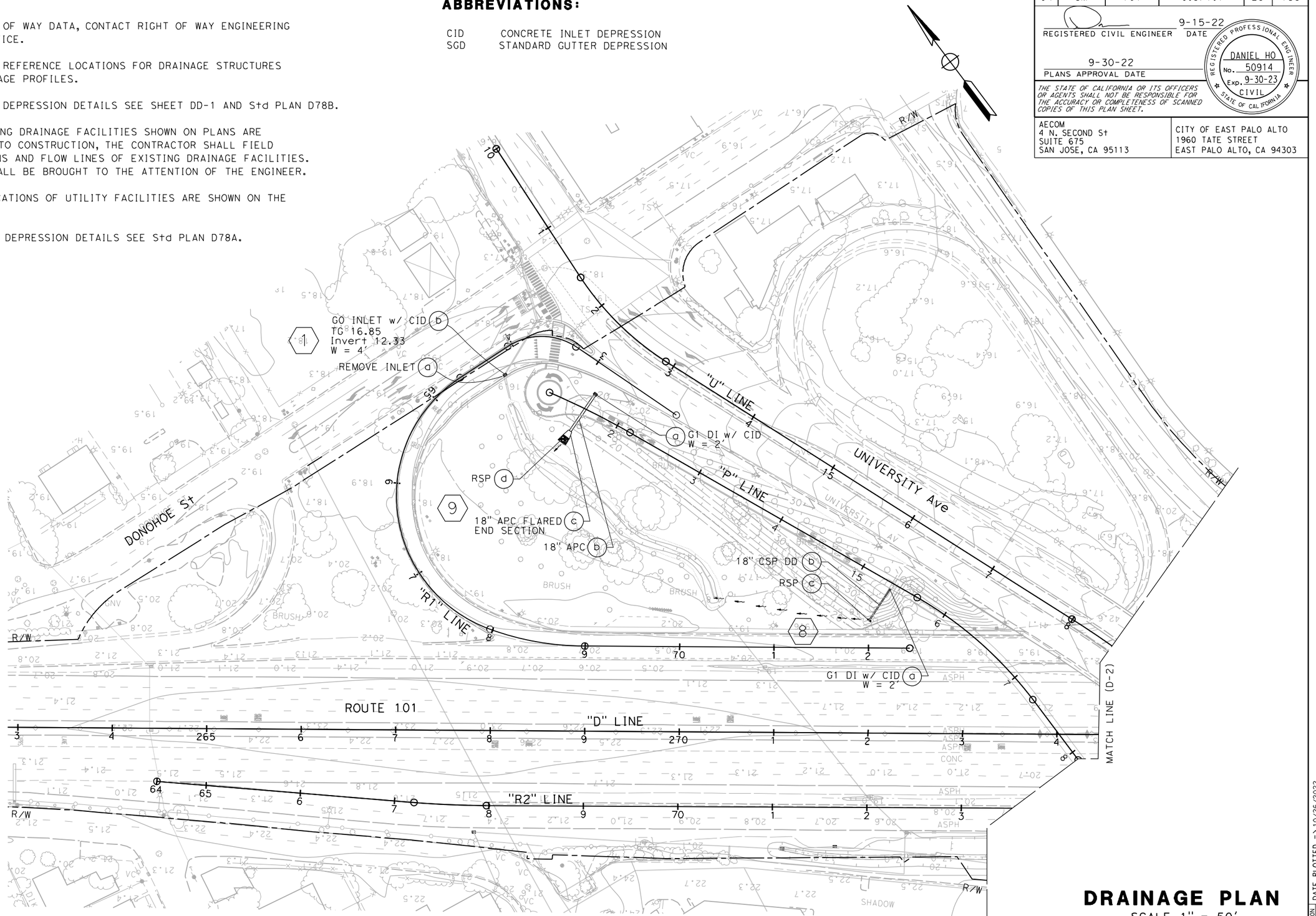

DRAINAGE PLAN

SCALE 1" = 50'

D-1

APPROVED FOR DRAINAGE WORK ONLY

STATE OF CALIFORNIA - DEPARTMENT OF TRANSPORTATION

REVISED BY	DATE REVISED
JC	9-15-22

CALCULATED-DESIGNED BY: JOSE CORONEL
CHECKED BY: DANIEL HO
CONSULTANT FUNCTIONAL SUPERVISOR: HOWARD MICHAEL

LAST REVISION 9-15-22
DATE PLOTTED => 10/26/2022
TIME PLOTTED => 2:43:59 PM

BORDER LAST REVISED 8/1/2016
USERNAME => jose.coronel
DGN FILE => 04000007591ia001.dgn
RELATIVE BORDER SCALE IS IN INCHES 0 1 2 3
UNIT 0703
PROJECT NUMBER & PHASE 04000007591

Dist	COUNTY	ROUTE	POST MILES TOTAL PROJECT	SHEET No.	TOTAL SHEETS
04	SM	101	0.8/1.1	30	136

REGISTERED CIVIL ENGINEER — 9-15-22 DATE

9-30-22
PLANS APPROVAL DATE

DANIEL HO No. 50914 Exp. 9-30-23 CIVIL — REGISTERED PROFESSIONAL ENGINEER — STATE OF CALIFORNIA

THE STATE OF CALIFORNIA OR ITS OFFICERS OR AGENTS SHALL NOT BE RESPONSIBLE FOR THE ACCURACY OR COMPLETENESS OF SCANNED COPIES OF THIS PLAN SHEET.

AECOM
4 N. SECOND St
SUITE 675
SAN JOSE, CA 95113

CITY OF EAST PALO ALTO
1960 TATE STREET
EAST PALO ALTO, CA 94303

NOTE:

FOR ACCURATE RIGHT OF WAY DATA, CONTACT
RIGHT OF WAY ENGINEERING AT THE DISTRICT OFFICE.

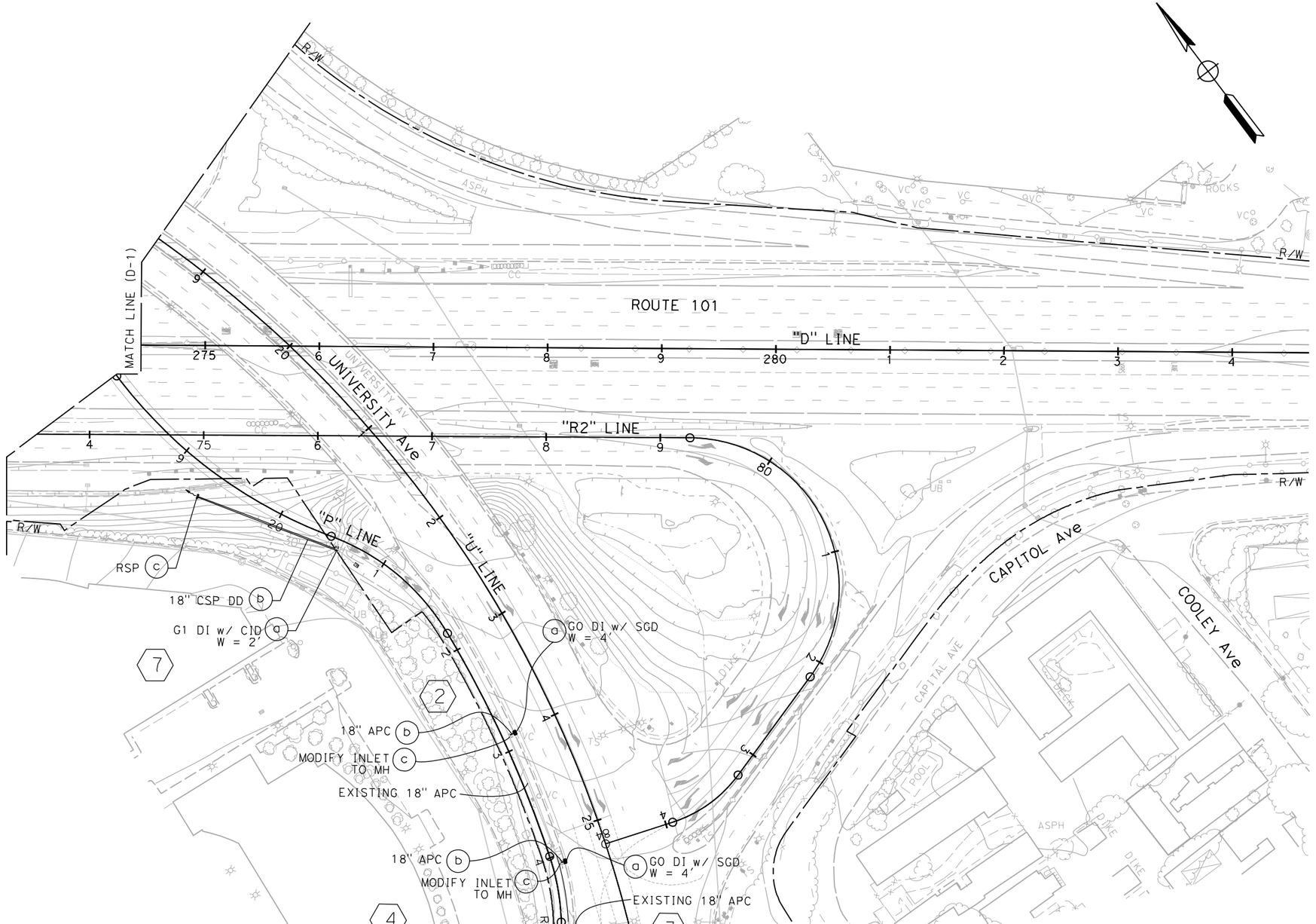

FOR NOTES AND ABBREVIATIONS
SEE SHEET D-1

APPROVED FOR DRAINAGE WORK ONLY

DRAINAGE PLAN

SCALE 1" = 50'

D-2

REVISED BY	DATE REVISED
JC	9-15-22

CALCULATED-DESIGNED BY: JOSE CORONEL
CHECKED BY: DANIEL HO
CONSULTANT FUNCTIONAL SUPERVISOR: HOWARD MICHAEL

STATE OF CALIFORNIA - DEPARTMENT OF TRANSPORTATION
Caltrans

LAST REVISION 9-15-22
DATE PLOTTED => 10/26/2022
TIME PLOTTED => 2:41:58 PM

BORDER LAST REVISED 8/1/2016 | USERNAME => jose.coronel | DGN FILE => 04000007591ia002.dgn | RELATIVE BORDER SCALE IS IN INCHES 0 1 2 3 | UNIT 0703 | PROJECT NUMBER & PHASE 04000007591

Dist	COUNTY	ROUTE	POST MILES TOTAL PROJECT	SHEET No.	TOTAL SHEETS
04	SM	101	0.8/1.1	31	136

9-15-22
REGISTERED CIVIL ENGINEER DATE

9-30-22
PLANS APPROVAL DATE

REGISTERED PROFESSIONAL ENGINEER
DANIEL HO
No. 50914
Exp. 9-30-23
CIVIL
STATE OF CALIFORNIA

THE STATE OF CALIFORNIA OR ITS OFFICERS OR AGENTS SHALL NOT BE RESPONSIBLE FOR THE ACCURACY OR COMPLETENESS OF SCANNED COPIES OF THIS PLAN SHEET.

AECOM
4 N. SECOND St
SUITE 675
SAN JOSE, CA 95113

CITY OF EAST PALO ALTO
1960 TATE STREET
EAST PALO ALTO, CA 94303

NOTE:

FOR ACCURATE RIGHT OF WAY DATA, CONTACT
RIGHT OF WAY ENGINEERING AT THE DISTRICT OFFICE.

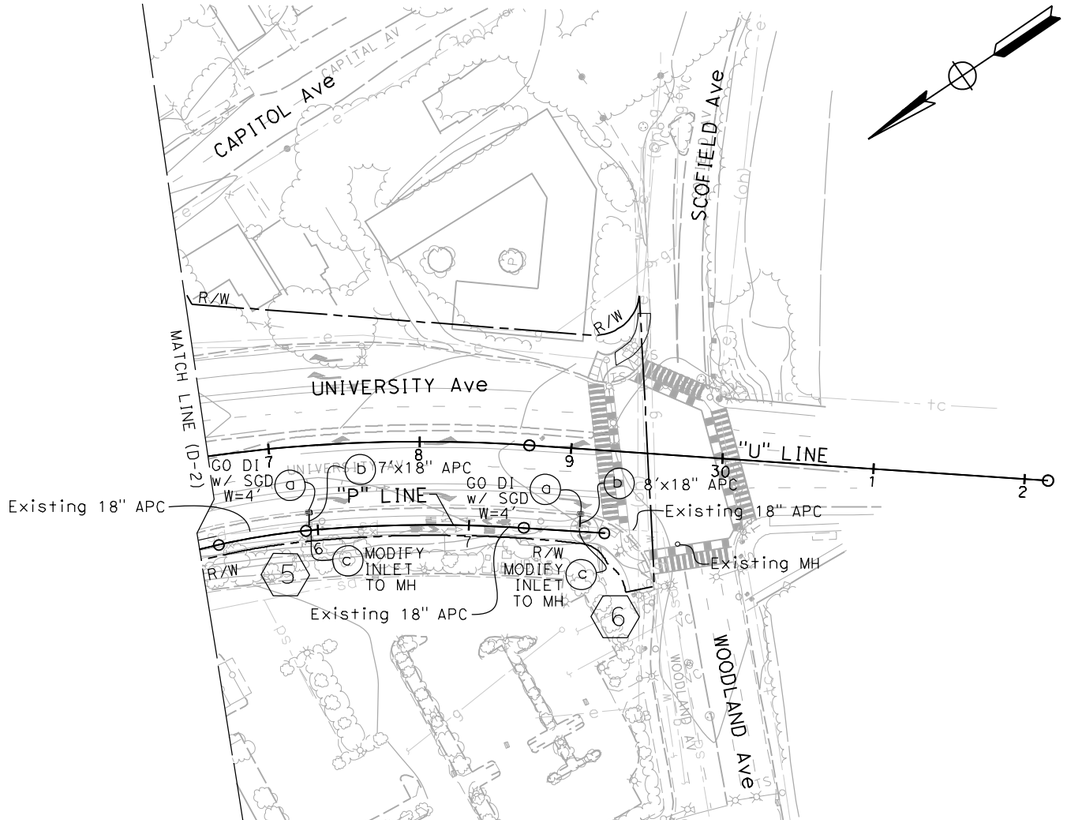

FOR NOTES, ABBREVIATIONS AND LEGEND, SEE SHEET D-1

APPROVED FOR DRAINAGE WORK ONLY

DRAINAGE PLAN

SCALE 1" = 50'

D-3

STATE OF CALIFORNIA - DEPARTMENT OF TRANSPORTATION	CONSULTANT FUNCTIONAL SUPERVISOR	HOWARD MICHAEL	
CALCULATED-DESIGNED BY	JOSE CORONEL	REVISED BY	JC
CHECKED BY	DANIEL HO	DATE REVISED	9-15-22

LAST REVISION 9-15-22
DATE PLOTTED => 10/26/2022
TIME PLOTTED => 2:49:13 PM

BORDER LAST REVISED 8/1/2016 | USERNAME => jose.coronel | DGN FILE => 04000007591ia003.dgn | RELATIVE BORDER SCALE IS IN INCHES 0 1 2 3 | UNIT 0703 | PROJECT NUMBER & PHASE 04000007591

Dist	COUNTY	ROUTE	POST MILES TOTAL PROJECT	SHEET No.	TOTAL SHEETS
04	SM	101	0.8/1.1	32	136

REGISTERED CIVIL ENGINEER — 8-9-22 DATE

9-30-22
PLANS APPROVAL DATE

DANIEL HO No. 50914 Exp. 9-30-23 CIVIL — REGISTERED PROFESSIONAL ENGINEER — STATE OF CALIFORNIA

THE STATE OF CALIFORNIA OR ITS OFFICERS OR AGENTS SHALL NOT BE RESPONSIBLE FOR THE ACCURACY OR COMPLETENESS OF SCANNED COPIES OF THIS PLAN SHEET.

AECOM
4 N. SECOND St
SUITE 675
SAN JOSE, CA 95113

CITY OF EAST PALO ALTO
1960 TATE STREET
EAST PALO ALTO, CA 94303

37.23' Rt "U" 24+00
GO DI w/ SGD
TG 32.85

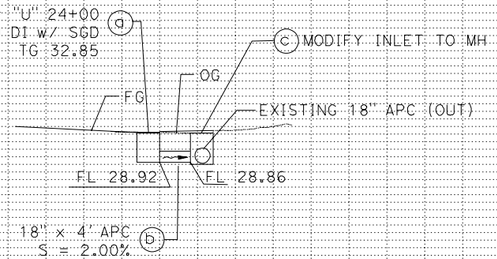

DRAINAGE SYSTEM No. 2

37.37' Rt "U" 25+25.19
GO DI w/ SGD
TG 29.30

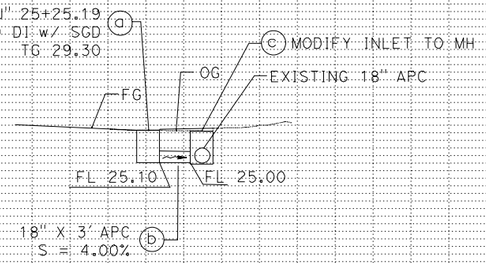

DRAINAGE SYSTEM No. 3

43.05' Rt "U" 27+22.76
GO DI w/ SGD
TG 26.71

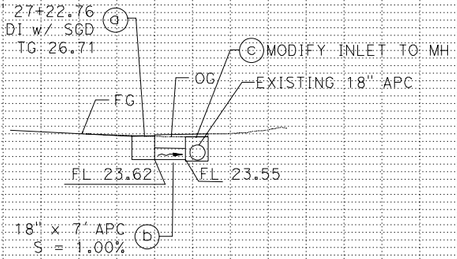

DRAINAGE SYSTEM No. 5

41.86' Rt "U" 29+08.52
GO DI w/ SGD
TG 30.22

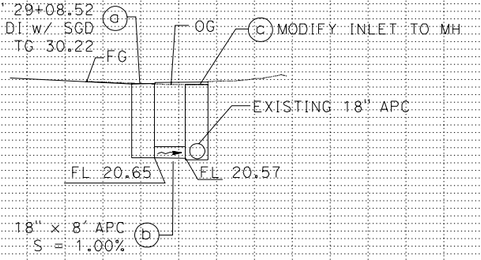

DRAINAGE SYSTEM No. 6

DRAINAGE PROFILE

SCALE: Horiz 1" = 50'
Vert 1" = 20'

DP-1

REVISED BY: JC — DATE REVISED: 8-9-22
CALCULATED-DESIGNED BY: LAN HO — CHECKED BY: DANIEL HO
CONSULTANT FUNCTIONAL SUPERVISOR: HOWARD MICHAEL
STATE OF CALIFORNIA - DEPARTMENT OF TRANSPORTATION — Caltrans

LAST REVISION 8-9-22
DATE PLOTTED => $DATE
TIME PLOTTED => $TIME

BORDER LAST REVISED 8/1/2016
USERNAME => $USER
DGN FILE => $REQUEST
RELATIVE BORDER SCALE IS IN INCHES 0 1 2 3
UNIT 0703
PROJECT NUMBER & PHASE 04000007591

Dist	COUNTY	ROUTE	POST MILES TOTAL PROJECT	SHEET No.	TOTAL SHEETS
04	SM	101	0.8/1.1	33	136

REGISTERED CIVIL ENGINEER — 8-9-22 DATE

9-30-22
PLANS APPROVAL DATE

REGISTERED PROFESSIONAL ENGINEER — DANIEL HO No. 50914 Exp. 9-30-23 CIVIL — STATE OF CALIFORNIA

THE STATE OF CALIFORNIA OR ITS OFFICERS OR AGENTS SHALL NOT BE RESPONSIBLE FOR THE ACCURACY OR COMPLETENESS OF SCANNED COPIES OF THIS PLAN SHEET.

AECOM
4 N. SECOND St
SUITE 675
SAN JOSE, CA 95113

CITY OF EAST PALO ALTO
1960 TATE STREET
EAST PALO ALTO, CA 94303

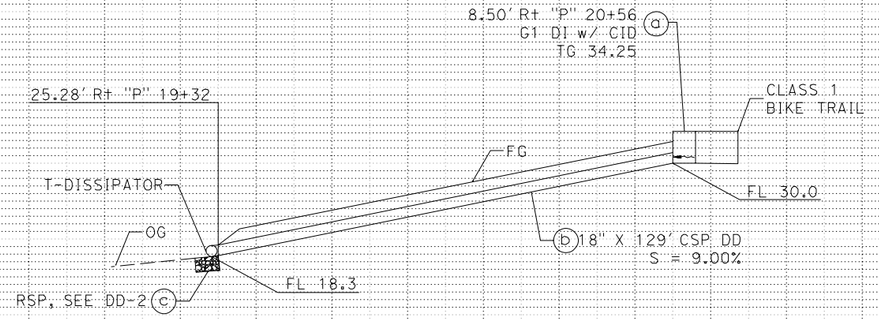

DRAINAGE SYSTEM No. 7

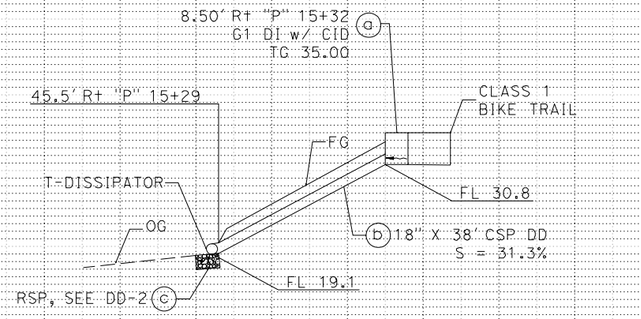

DRAINAGE SYSTEM No. 8

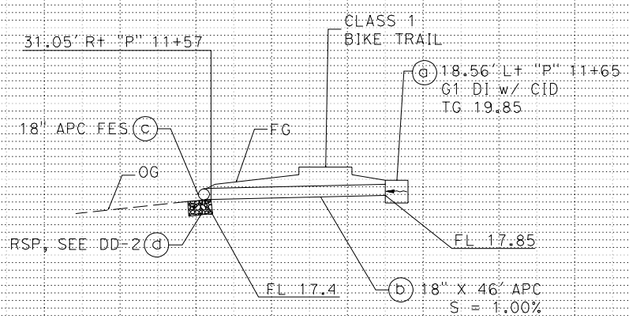

DRAINAGE SYSTEM No. 9

DRAINAGE PROFILE

SCALE: Horiz 1" = 20'
Vert 1" = 10'

DP-2

STATE OF CALIFORNIA - DEPARTMENT OF TRANSPORTATION | Caltrans | CONSULTANT FUNCTIONAL SUPERVISOR: HOWARD MICHAEL | CALCULATED-DESIGNED BY | CHECKED BY | LAN HO | DANIEL HO | REVISED BY | JC | DATE REVISED | 8-9-22

LAST REVISION 8-9-22
DATE PLOTTED => 10/26/2022
TIME PLOTTED => 2:53:31 PM

BORDER LAST REVISED 8/1/2016 | USERNAME => jose.coronel | DGN FILE => 04000007591ib002.dgn | RELATIVE BORDER SCALE IS IN INCHES 0 1 2 3 | UNIT 0703 | PROJECT NUMBER & PHASE 04000007591

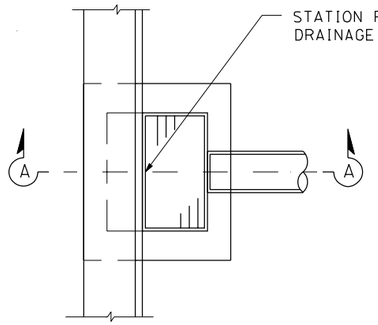

PLAN

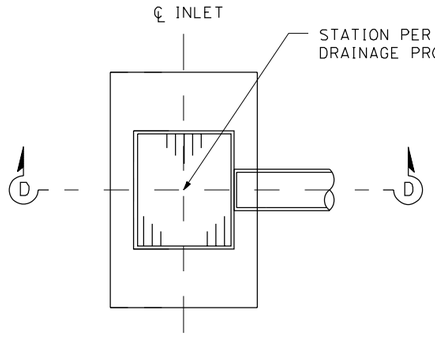

PLAN

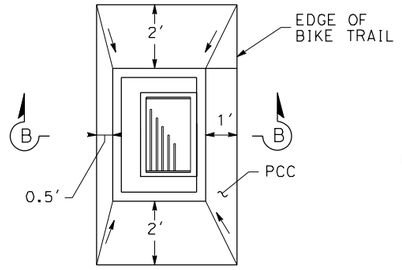

PLAN

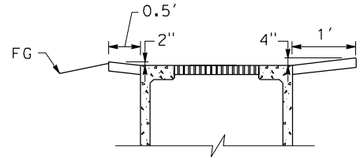

SECTION B-B

CONCRETE INLET DEPRESSION (FIELD INLET)

7 a 8 a

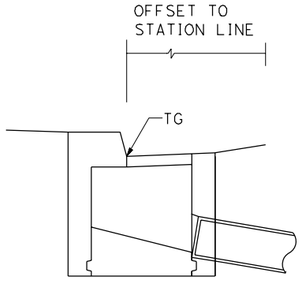

SECTION A-A

INLET ADJACENT TO CURB

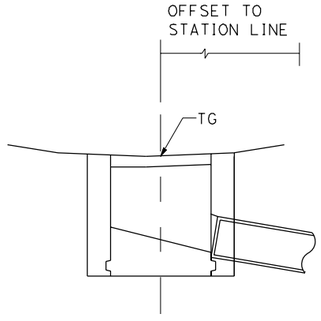

SECTION D-D

FIELD INLET

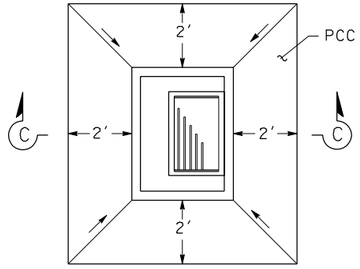

PLAN

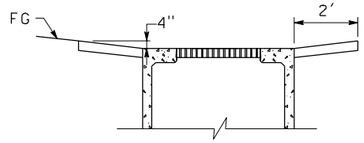

SECTION C-C

CONCRETE INLET DEPRESSION

9 a

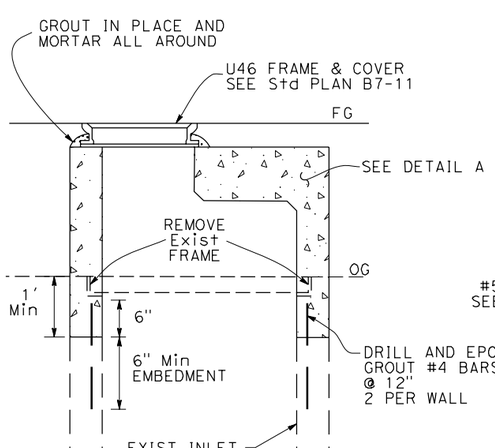

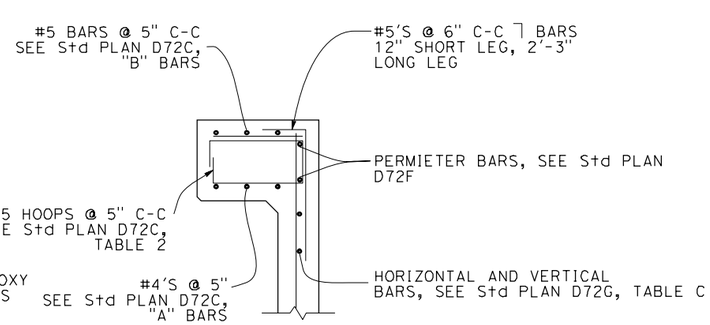

DETAIL A

MODIFY INLET TO MANHOLE

2 c 3 c 4 a 5 c 6 c

TABLE B

D	A	W
UP TO 24"	2-#5 HOOPS	18"
OVER 24"	3-#5 HOOPS	24"

NOTE:

1. WHERE NO EXISTING Reinf IS PRESENT, DRILL AND GROUT #4 BARS 4 INCHES INTO EXISTING CONCRETE AND BEND INTO COLLAR. TOTAL 4 SPACED EVENLY AROUND PIPE.

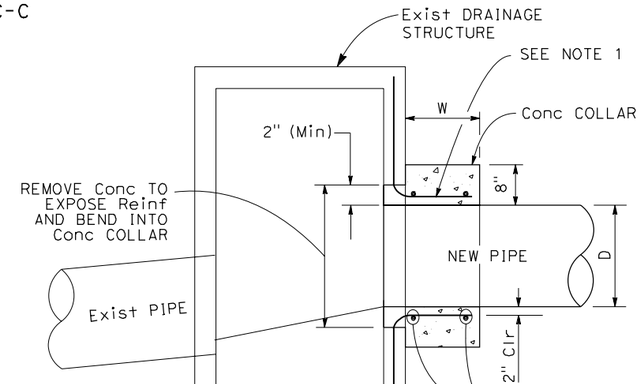

PIPE CONNECTION TO EXISTING DRAINAGE STRUCTURE

2 b 3 b 5 b 6 b

APPROVED FOR DRAINAGE WORK ONLY

DRAINAGE DETAILS

NO SCALE

DD-1

Dist	COUNTY	ROUTE	POST MILES TOTAL PROJECT	SHEET No.	TOTAL SHEETS
04	SM	101	0.8/1.1	34	136

REGISTERED CIVIL ENGINEER — DATE 9-15-22

PLANS APPROVAL DATE 9-30-22

REGISTERED PROFESSIONAL ENGINEER — DANIEL HO No. 50914 Exp. 9-30-23 CIVIL — STATE OF CALIFORNIA

THE STATE OF CALIFORNIA OR ITS OFFICERS OR AGENTS SHALL NOT BE RESPONSIBLE FOR THE ACCURACY OR COMPLETENESS OF SCANNED COPIES OF THIS PLAN SHEET.

AECOM
4 N. SECOND St
SUITE 675
SAN JOSE, CA 95113

CITY OF EAST PALO ALTO
1960 TATE STREET
EAST PALO ALTO, CA 94303

REVISED BY	DATE REVISED
JC	9-15-22

CALCULATED-DESIGNED BY: JOSE CORONEL
CHECKED BY: DANIEL HO
CONSULTANT FUNCTIONAL SUPERVISOR: HOWARD MICHAEL
STATE OF CALIFORNIA - DEPARTMENT OF TRANSPORTATION

LAST REVISION 9-15-22
DATE PLOTTED => 10/26/2022
TIME PLOTTED => 2:54:12 PM

BORDER LAST REVISED 8/1/2016
USERNAME => jose.coronel
DGN FILE => 04000007591ic001.dgn
RELATIVE BORDER SCALE IS IN INCHES 0 1 2 3
UNIT 0703
PROJECT NUMBER & PHASE 04000007591

Dist	COUNTY	ROUTE	POST MILES TOTAL PROJECT	SHEET No.	TOTAL SHEETS
04	SM	101	0.8/1.1	35	136

REGISTERED CIVIL ENGINEER — 9-15-22 DATE

PLANS APPROVAL DATE — 9-30-22

REGISTERED PROFESSIONAL ENGINEER — DANIEL HO, No. 50914, Exp. 9-30-23, CIVIL, STATE OF CALIFORNIA

THE STATE OF CALIFORNIA OR ITS OFFICERS OR AGENTS SHALL NOT BE RESPONSIBLE FOR THE ACCURACY OR COMPLETENESS OF SCANNED COPIES OF THIS PLAN SHEET.

AECOM
4 N. SECOND St
SUITE 675
SAN JOSE, CA 95113

CITY OF EAST PALO ALTO
1960 TATE STREET
EAST PALO ALTO, CA 94303

NOTES:

1. DIAMETER OF "T" 24" MAXIMUM.
2. SEE STANDARD PLAN D97A - D97J FOR COUPLING DETAILS NOT SHOWN.
3. SEE STANDARD PLAN D87A & D87B FOR PIPE DOWNDRAIN ANCHOR ASSEMBLY AND RESTRAINER ASSEMBLY.

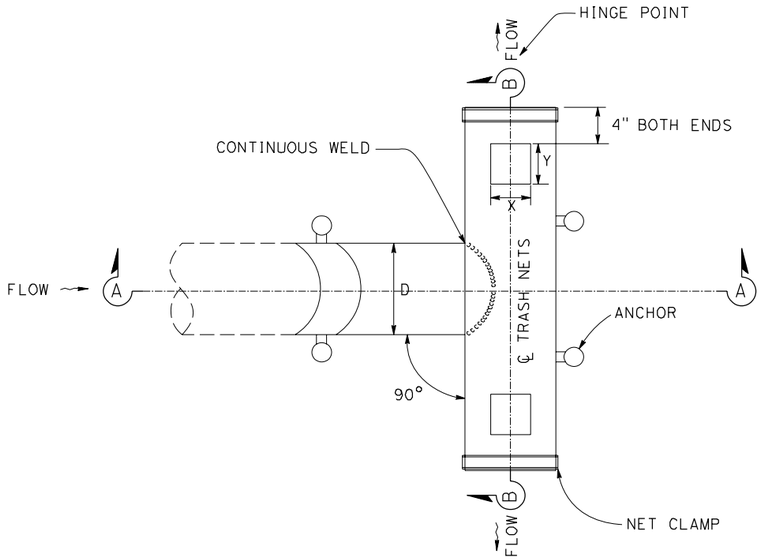

PLAN

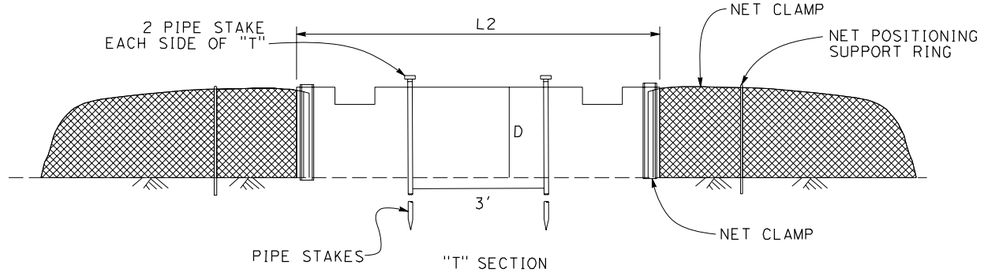

SECTION B-B

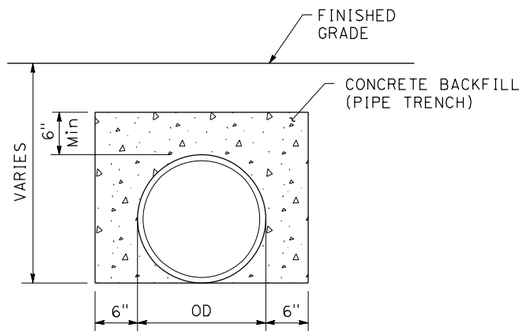

CONCRETE BACKFILL DETAIL

2 b 3 b 5 b

TRASH NET BMP

DD "T" DETAIL

7 c 8 c 9 c

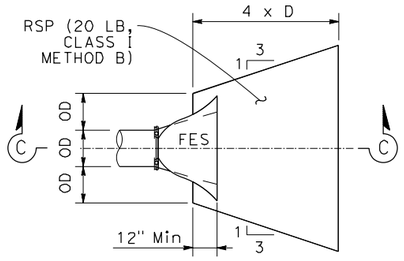

PLAN

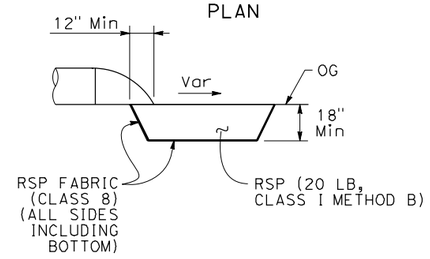

SECTION C-C

RSP DETAIL

7 c

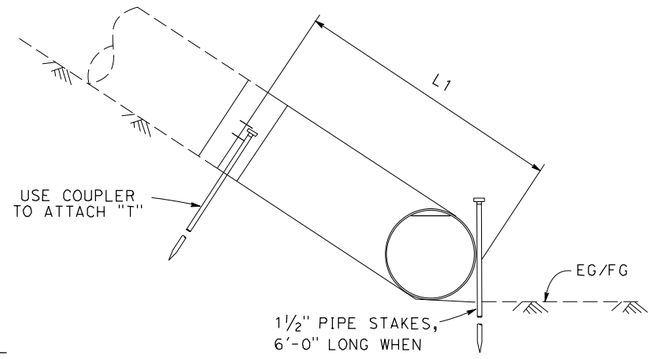

SECTION A-A

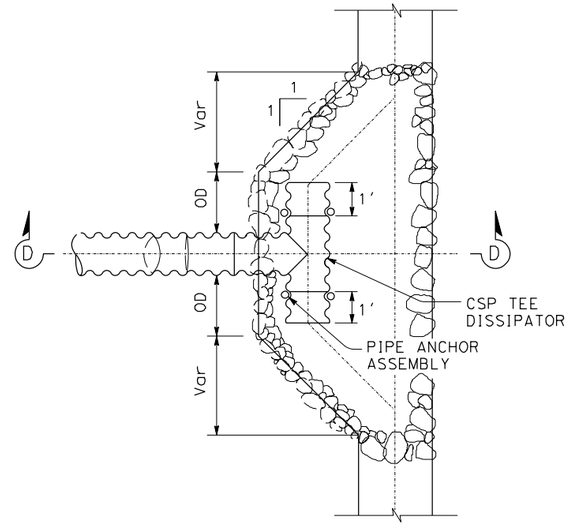

DOWNDRAIN TEE

8 c 9 c

NOTE:

1. FOR DOWNDRAIN DETAILS NOT SHOWN, SEE STANDARD PLAN D87A.

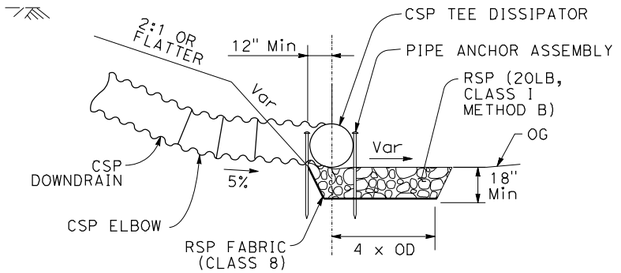

SECTION D-D

TRASH NET DIMENSION TABLE

PIPE SIZE D	T LENGHTS L1	T LENGHTS L2	OVERFLOWN OPENING * CUTOUT DIMENSIONS X	OVERFLOWN OPENING * CUTOUT DIMENSIONS Y	TRASH NET LENGTH Ln
18"	5'	6'	11.5"	11.5"	X

* CUT OPENINGS BOTH SIDES

DRAINAGE DETAILS

NO SCALE

DD-2

APPROVED FOR DRAINAGE WORK ONLY

REVISED BY	DATE REVISED
JC	9-15-22

CALCULATED-DESIGNED BY: JOSE CORONEL
CHECKED BY: DANIEL HO
CONSULTANT FUNCTIONAL SUPERVISOR: HOWARD MICHAEL
STATE OF CALIFORNIA - DEPARTMENT OF TRANSPORTATION

LAST REVISION 9-15-22
DATE PLOTTED => 10/26/2022
TIME PLOTTED => 2:55:23 PM

BORDER LAST REVISED 8/1/2016 | USERNAME => jose.coronel | DGN FILE => 04000007591ic002.dgn | RELATIVE BORDER SCALE IS IN INCHES 0 1 2 3 | UNIT 0703 | PROJECT NUMBER & PHASE 04000007591

Dist	COUNTY	ROUTE	POST MILES TOTAL PROJECT	SHEET No.	TOTAL SHEETS
04	SM	101	0.8/1.1	36	136

REGISTERED CIVIL ENGINEER — 9-15-22 DATE

9-30-22 PLANS APPROVAL DATE

REGISTERED PROFESSIONAL ENGINEER — DANIEL HO No. 50914 Exp. 9-30-23 CIVIL — STATE OF CALIFORNIA

THE STATE OF CALIFORNIA OR ITS OFFICERS OR AGENTS SHALL NOT BE RESPONSIBLE FOR THE ACCURACY OR COMPLETENESS OF SCANNED COPIES OF THIS PLAN SHEET.

AECOM
4 N. SECOND St
SUITE 675
SAN JOSE, CA 95113

CITY OF EAST PALO ALTO
1960 TATE STREET
EAST PALO ALTO, CA 94303

APC ALLOWABLE PIPE MATERIAL AND PROTECTION

DESIGNATION	RCP	CSP (0.109" THICK) BITUMINOUS COATING AND PAVED INVERT	HDPE PIPE TYPE S	PVC CORRUGATED w/ SMOOTH INTERIOR
18" APC	YES	YES	YES	YES

ABBREVIATIONS:

WT WATERTIGHT JOINT

DRAINAGE QUANTITIES

DRAINAGE PLAN SHEET No.	DRAINAGIN SYSTEM No.	DRAINAGE UNIT	DRAINAGE INLET MARKER (EA)	INLET DEPRESSION (EA)	MINOR CONCRETE (GUTTER DEPRESSION) (CY)	(N)FRAME AND GRATE (EA) 24-12x	MAXIMUM HEIGHT OF COVER (N) (LF)	HEIGHT OF INLET/MANHOLE (N) (LF)	ALTERNATIVE PIPE CULVERT (LF) 18"	ALTERNATIVE FLARED END SECTION (EA) 18"	18" CORRUGATED STEEL PIPE DOWNDRAIN (LF)	REMOVE INLET (EA)	MODIFY INLET TO MH (EA)	STRUCTURAL CONCRETE, MINOR STRUCTURE (CY)	MISCELLANEOUS IRON AND STEEL (LB)	CSP TEE DISSIPATOR (EA)	RSP (20LB, CLASS I METHOD B) (CY)	TRASH NET (N) (EA)	LENGTH OF NET (N) (FT)	WT JOINT (N)	DESCRIPTION	STATION	DRAINAGE PLAN SHEET No.	DRAINAGE SYSTEM No.	DRAINAGE UNIT
D-1	1	a										1									REMOVE INLET	22.44' R+ "R1" LINE 64+24.93	D-1	1	a
		b	1	1	1	1		4.9						3.14	239						GO DI w/CID	22.44' R+ "R1" LINE 64+24.93			b
	8	a	1	1	1	1		4.0						2.56	239						G1 DI w/CID	8.50' R+ "P" LINE 15+32		8	a
		b					2.5				38										18" CSP	8.50' TO 45.5' R+ "P" LINE 15+29			b
		c														1	0.75	1	4	1	RSP	28.65' L+ "R1" LINE 72+00			c
	9	a	1	1	1	1								2.56	239						G1 DI w/CID	66' R+ "U" LINE 12+54		9	a
		b							46												18" APC	73.2' R+ "U" LINE 12+54 TO 119' R+ "U" LINE 12+57			b
		c								1											FLARED END SECTION	119' "U" LINE 12+57			c
		d														1	1.50	1	8		RSP	126.23' "U" LINE 12+57			d
D-2	2	a	1	1	1	1		4.0						2.56	239						GO DI w/SGD	37.23' R+ "U" LINE 24+00	D-2	2	a
		b					2.5		4												18" APC	37.23' to 41.23' R+ "U" LINE 24+00			b
		c											1								MODIFY INLET TO MH	41.23' R+ "U" LINE 24+00			c
	3	a	1	1	1	1		4.2						2.69	239						GO DI w/SGD	37.37' R+ "U" LINE 25+25.19		3	a
		b					2.7		3												18" APC	37.37' to 40.37' R+ "U" LINE 25+25.19			b
		c											1								MODIFY INLET TO MH	40.37' R+ "U" LINE 25+25.19			c
	4	a											1								MODIFY INLET TO MH	61.50' R+ "U" LINE 25+95.58		4	a
	7	a	1	1	1	1		4.0						2.56	239						G1 DI w/CID	8.50' R+ "P" LINE 20+56		7	a
		b					2.5				129									1	18" CSP	8.50' TO 25.28' R+ "P" LINE 20+56			b
		c														1	0.75	1	4		RSP	132.06' R+ "D" LINE 274+94			c
D-3	5	a	1	1	1	1		3.2						2.05	239						GO DI w/SGD	43.05' R+ "U" LINE 27+22.76	D-3	5	a
		b					1.7		7												18" APC	43.05' to 50.05' R+ "U" LINE 27+22.76			b
		c											1								MODIFY INLET TO MH	50.05' R+ "U" LINE 27+22.76			c
	6	a	1	1	1	1		9.9						6.35	239						GO DI w/SGD	41.86' R+ "U" LINE 29+08.52		6	a
		b					8.4		8												18" APC	41.86' to 48.86' R+ "U" LINE 29+08.52			b
		c											1								MODIFY INLET TO MH	48.86' R+ "U" LINE 29+08.52			c
TOTAL			8	8	8	9			68	1	167	1	5	25.4	1912	3	3							

(N) - NOT A SEPARATE BID ITEM.

APPROVED FOR DRAINAGE WORK ONLY

DRAINAGE QUANTITIES

DQ-1

REVISED BY	JC
DATE REVISED	9-15-22
CALCULATED-DESIGNED BY	JOSE CORONEL
CHECKED BY	DANIEL HO
SUPERVISOR	HOWARD MICHAEL

CONSULTANT FUNCTIONAL SUPERVISOR

STATE OF CALIFORNIA - DEPARTMENT OF TRANSPORTATION

Caltrans

LAST REVISION 9-15-22

DATE PLOTTED => $DATE
TIME PLOTTED => $TIME

BORDER LAST REVISED 8/1/2016

USERNAME => $USER
DGN FILE => $REQUEST

RELATIVE BORDER SCALE IS IN INCHES 0 1 2 3

UNIT 0703

PROJECT NUMBER & PHASE 04000007591

Dist	COUNTY	ROUTE	POST MILES TOTAL PROJECT	SHEET No.	TOTAL SHEETS
04	SM	101	0.8/1.1	37	136

REGISTERED CIVIL ENGINEER 9-15-22 DATE

9-30-22
PLANS APPROVAL DATE

REGISTERED PROFESSIONAL ENGINEER DANIEL HO No. 50914 Exp. 9-30-23 CIVIL STATE OF CALIFORNIA

THE STATE OF CALIFORNIA OR ITS OFFICERS OR AGENTS SHALL NOT BE RESPONSIBLE FOR THE ACCURACY OR COMPLETENESS OF SCANNED COPIES OF THIS PLAN SHEET.

AECOM
4 N. SECOND St
SUITE 675
SAN JOSE, CA 95113

CITY OF EAST PALO ALTO
1960 TATE STREET
EAST PALO ALTO, CA 94303

NOTES:

1. FOR ACCURATE RIGHT OF WAY DATA, CONTACT RIGHT OF WAY ENGINEERING AT THE DISTRICT OFFICE.
2. LOCATIONS OF UTILITY FACILITIES SHOWN ON THESE PLANS ARE APPROXIMATE AND SHALL BE VERIFIED BY THE CONTRACTOR PRIOR TO CONSTRUCTION.
3. UTILITY OWNERSHIP ON THIS PROJECT:
   GAS - PACIFIC GAS & ELECTRIC
   WATER - CITY OF EAST PALO ALTO
   ELECTRIC - PACIFIC GAS & ELECTRIC
   SEWER - CITY OF EAST PALO ALTO
   CABLE TELEVISION - COMCAST
   FIBER OPTICS - SPRINT/LEVEL 3 COMM/VERIZON
   Tel - AT&T

ABBREVIATIONS:

CEPA	CITY OF EAST PALO ALTO
EPAWD	EAST PALO ALTO WATER DISTRICT
kV	KILOVOLT
MCI	MCI TELECOMMUNICATION
OH	OVERHEAD
PG&E	PACIFIC GAS AND ELECTRIC
SMCWD	SAN MATEO COUNTY WATER DISTRICT
UG	UNDERGROUND

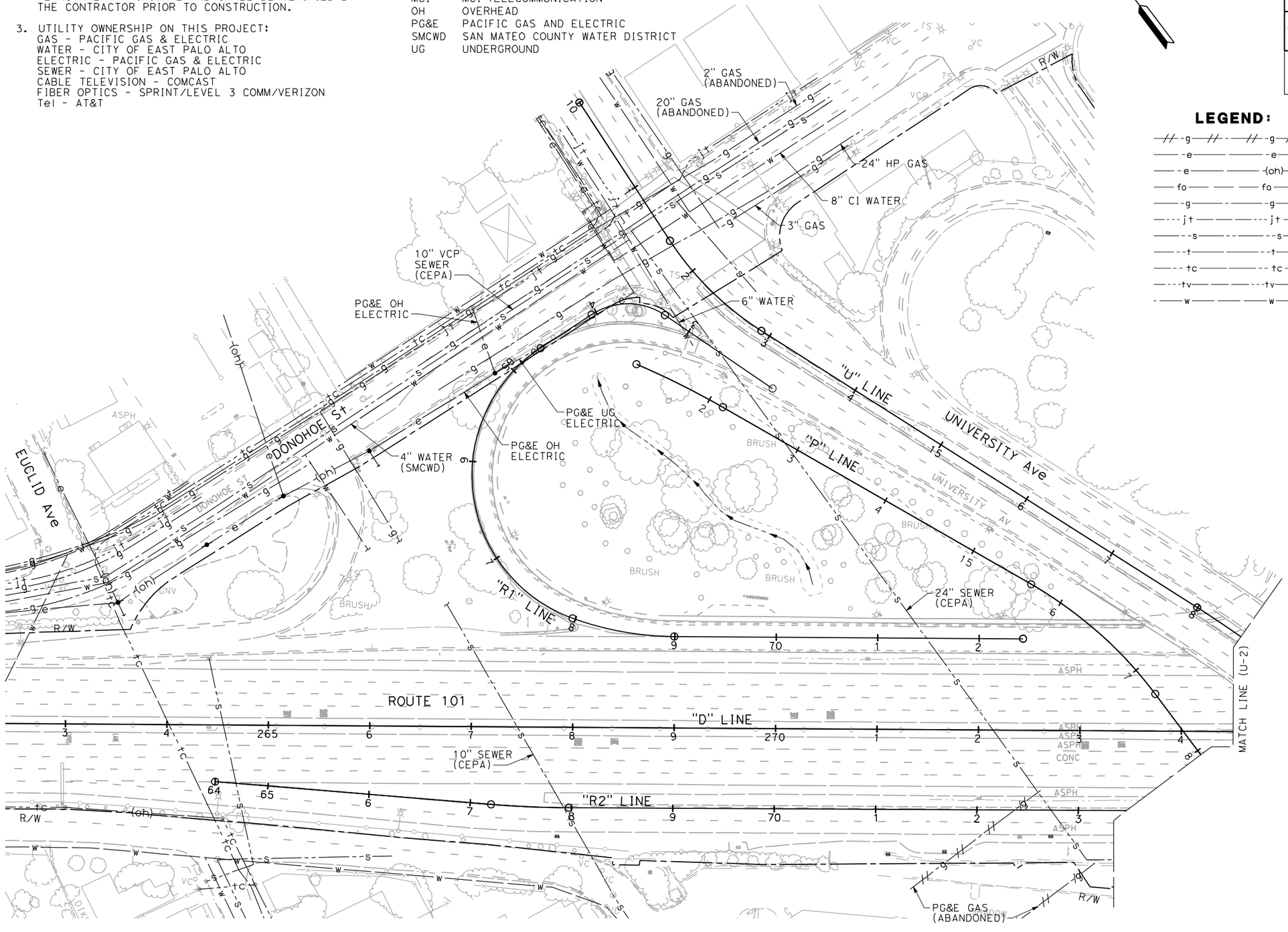

LEGEND:

-//-g-//-	ABANDONED
-e-	Exist ELECTRIC LINE
-e- (oh)	Exist ELECTRIC OVERHEAD LINE
-fo-	Exist FIBER OPTIC
-g-	Exist GAS LINE
-jt-	Exist JOINT TRENCH
-s-	Exist SANITARY SEWER
-t-	Exist TELEPHONE LINE
-tc-	Exist TELECOMMUNICATION
-tv-	Exist TELEVISION CABLE
-w-	Exist WATER LINE

UTILITY PLAN

SCALE 1" = 50'

U-1

THIS PLAN TO BE USED FOR UTILITY INFORMATION ONLY

STATE OF CALIFORNIA - DEPARTMENT OF TRANSPORTATION
Caltrans

CONSULTANT FUNCTIONAL SUPERVISOR: HOWARD MICHAEL
CALCULATED-DESIGNED BY: JOSE CORONEL
CHECKED BY: DANIEL HO
REVISED BY: JC
DATE REVISED: 9-15-22

LAST REVISION 9-15-22
DATE PLOTTED => 10/26/2022
TIME PLOTTED => 2:58:56 PM

Dist	COUNTY	ROUTE	POST MILES TOTAL PROJECT	SHEET No.	TOTAL SHEETS
04	SM	101	0.8/1.1	38	136

REGISTERED CIVIL ENGINEER — DATE 9-15-22

PLANS APPROVAL DATE 9-30-22

REGISTERED PROFESSIONAL ENGINEER — DANIEL HO No. 50914 Exp. 9-30-23 CIVIL — STATE OF CALIFORNIA

THE STATE OF CALIFORNIA OR ITS OFFICERS OR AGENTS SHALL NOT BE RESPONSIBLE FOR THE ACCURACY OR COMPLETENESS OF SCANNED COPIES OF THIS PLAN SHEET.

AECOM
4 N. SECOND St
SUITE 675
SAN JOSE, CA 95113

CITY OF EAST PALO ALTO
1960 TATE STREET
EAST PALO ALTO, CA 94303

NOTE:

FOR ACCURATE RIGHT OF WAY DATA, CONTACT RIGHT OF WAY ENGINEERING AT THE DISTRICT OFFICE.

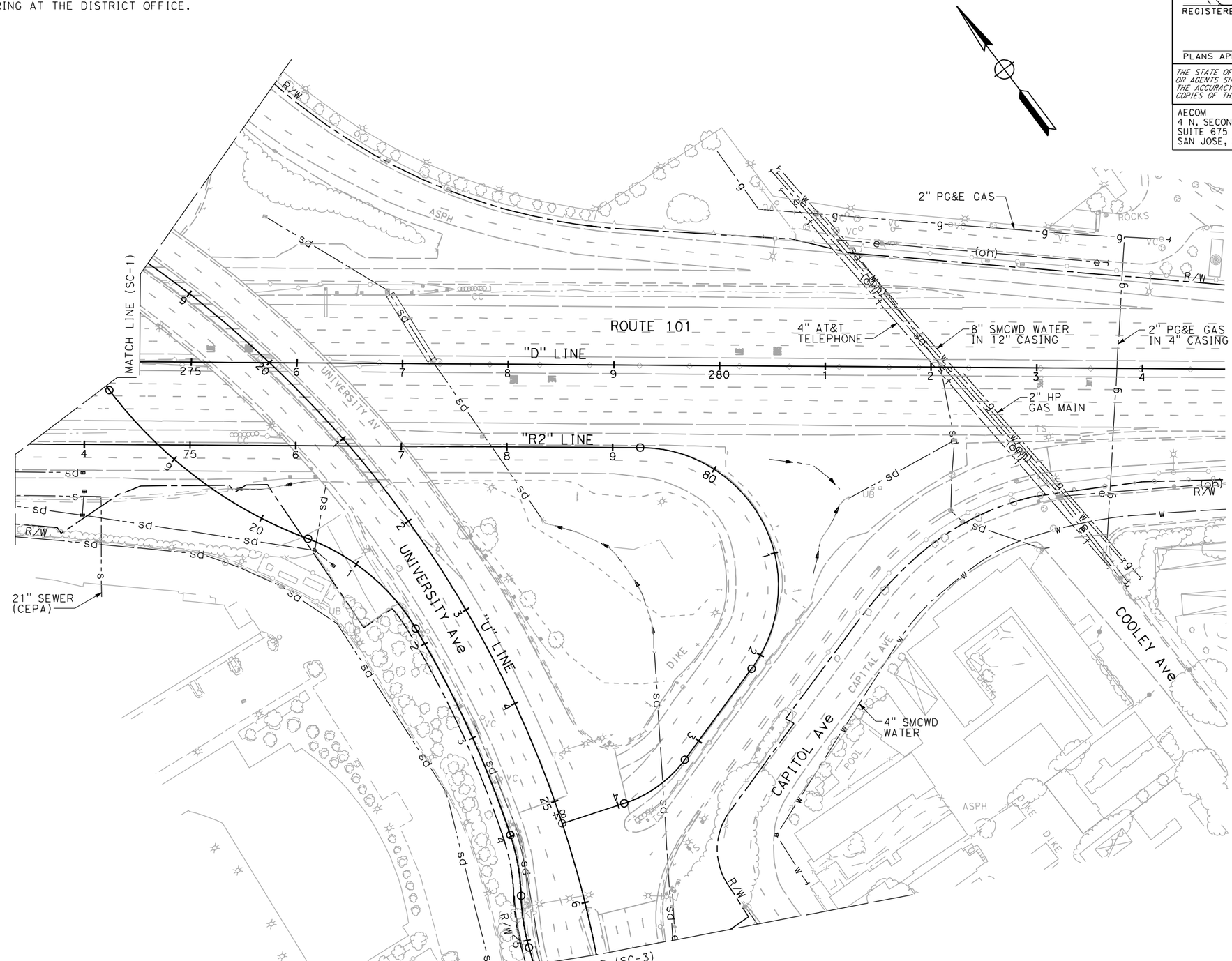

FOR NOTES, ABBREVIATIONS AND LEGEND, SEE SHEET U-1

UTILITY PLAN

SCALE 1" = 50'

U-2

THIS PLAN TO BE USED FOR UTILITY INFORMATION ONLY

REVISED BY	DATE REVISED
JC	9-15-22

CALCULATED-DESIGNED BY: JOSE CORONEL
CHECKED BY: DANIEL HO
CONSULTANT FUNCTIONAL SUPERVISOR: HOWARD MICHAEL

STATE OF CALIFORNIA - DEPARTMENT OF TRANSPORTATION

LAST REVISION 9-15-22
DATE PLOTTED => 10/26/2022
TIME PLOTTED => 3:08:34 PM

BORDER LAST REVISED 8/1/2016 | USERNAME => jose.coronel | DGN FILE => 04000007591ka002.dgn | RELATIVE BORDER SCALE IS IN INCHES 0 1 2 3 | UNIT 0703 | PROJECT NUMBER & PHASE 04000007591

Dist	COUNTY	ROUTE	POST MILES TOTAL PROJECT	SHEET No.	TOTAL SHEETS
04	SM	101	0.8/1.1	39	136

9-15-22
REGISTERED CIVIL ENGINEER DATE

9-30-22
PLANS APPROVAL DATE

REGISTERED PROFESSIONAL ENGINEER
DANIEL HO
No. 50914
Exp. 9-30-23
CIVIL
STATE OF CALIFORNIA

THE STATE OF CALIFORNIA OR ITS OFFICERS OR AGENTS SHALL NOT BE RESPONSIBLE FOR THE ACCURACY OR COMPLETENESS OF SCANNED COPIES OF THIS PLAN SHEET.

AECOM
4 N. SECOND St
SUITE 675
SAN JOSE, CA 95113

CITY OF EAST PALO ALTO
1960 TATE STREET
EAST PALO ALTO, CA 94303

NOTE:

FOR ACCURATE RIGHT OF WAY DATA, CONTACT
RIGHT OF WAY ENGINEERING AT THE DISTRICT OFFICE.

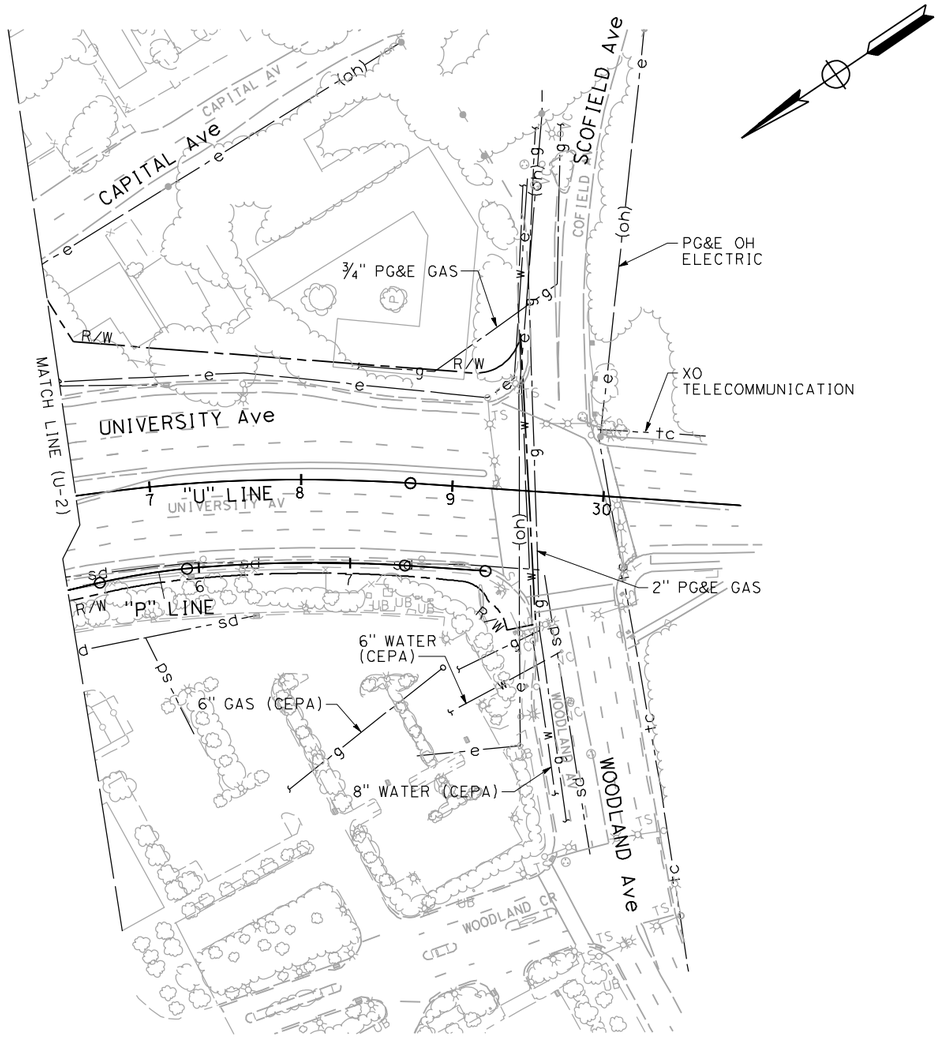

FOR NOTES, ABBREVIATIONS AND LEGEND, SEE SHEET U-1

UTILITY PLAN

SCALE 1" = 50'

U-3

THIS PLAN TO BE USED FOR UTILITY INFORMATION ONLY

REVISED BY	JOSE CORONEL	CALCULATED-DESIGNED BY
DATE REVISED	DANIEL HO	CHECKED BY
9-15-22	JC	

CONSULTANT FUNCTIONAL SUPERVISOR: HOWARD MICHAEL

STATE OF CALIFORNIA - DEPARTMENT OF TRANSPORTATION

LAST REVISION 9-15-22
DATE PLOTTED => 10/26/2022
TIME PLOTTED => 3:01:58 PM

NOTES:

1. SEE STANDARD PLAN T10 FOR FREEWAY CLOSURE. SEE STANDARD PLAN T14 FOR RAMP CLOSURE.
2. LOCATIONS OF CONSTRUCTION AREA SIGNS SHOWN ARE APPROXIMATE ONLY. EXACT LOCATIONS TO BE DETERMINED BY THE ENGINEER.
3. CONFLICTING SIGNS SHALL BE COVERED WHEN NOT IN USE.
4. DETOUR SIGNS TO BE COVERED OR REMOVED WHEN NOT IN USE.
5. INFORMATION SIGNS SHALL BE INSTALLED A MINIMUM OF 72 HOURS PRIOR TO FREEWAY/RAMP CLOSURE.
6. CONTRACTOR SHALL MAINTAIN EMERGENCY VEHICLE ACCESS AT ALL TIMES.

LEGEND:

- [No.] CONSTRUCTION AREA SIGN DESIGNATION
- ONE POST CONSTRUCTION AREA SIGN
- TWO POST CONSTRUCTION AREA SIGN
- DIRECTION OF DETOUR
- (No.) DETOURS SIGN NUMBER
- PCMS PORTABLE CHANGEABLE MESSAGE SIGN
- CONSTRUCTION AREA CLOSED TO TRAFFIC

Dist	COUNTY	ROUTE	POST MILES TOTAL PROJECT	SHEET No.	TOTAL SHEETS
04	SM	101	0.8/1.1	40	136

9-15-22
REGISTERED CIVIL ENGINEER DATE

REGISTERED PROFESSIONAL ENGINEER
DANIEL HO
No. 50914
Exp. 9-30-23
CIVIL
STATE OF CALIFORNIA

9-30-22
PLANS APPROVAL DATE

THE STATE OF CALIFORNIA OR ITS OFFICERS OR AGENTS SHALL NOT BE RESPONSIBLE FOR THE ACCURACY OR COMPLETENESS OF SCANNED COPIES OF THIS PLAN SHEET.

AECOM
4 N. SECOND St
SUITE 675
SAN JOSE, CA 95113

CITY OF EAST PALO ALTO
1960 TATE STREET
EAST PALO ALTO, CA 94303

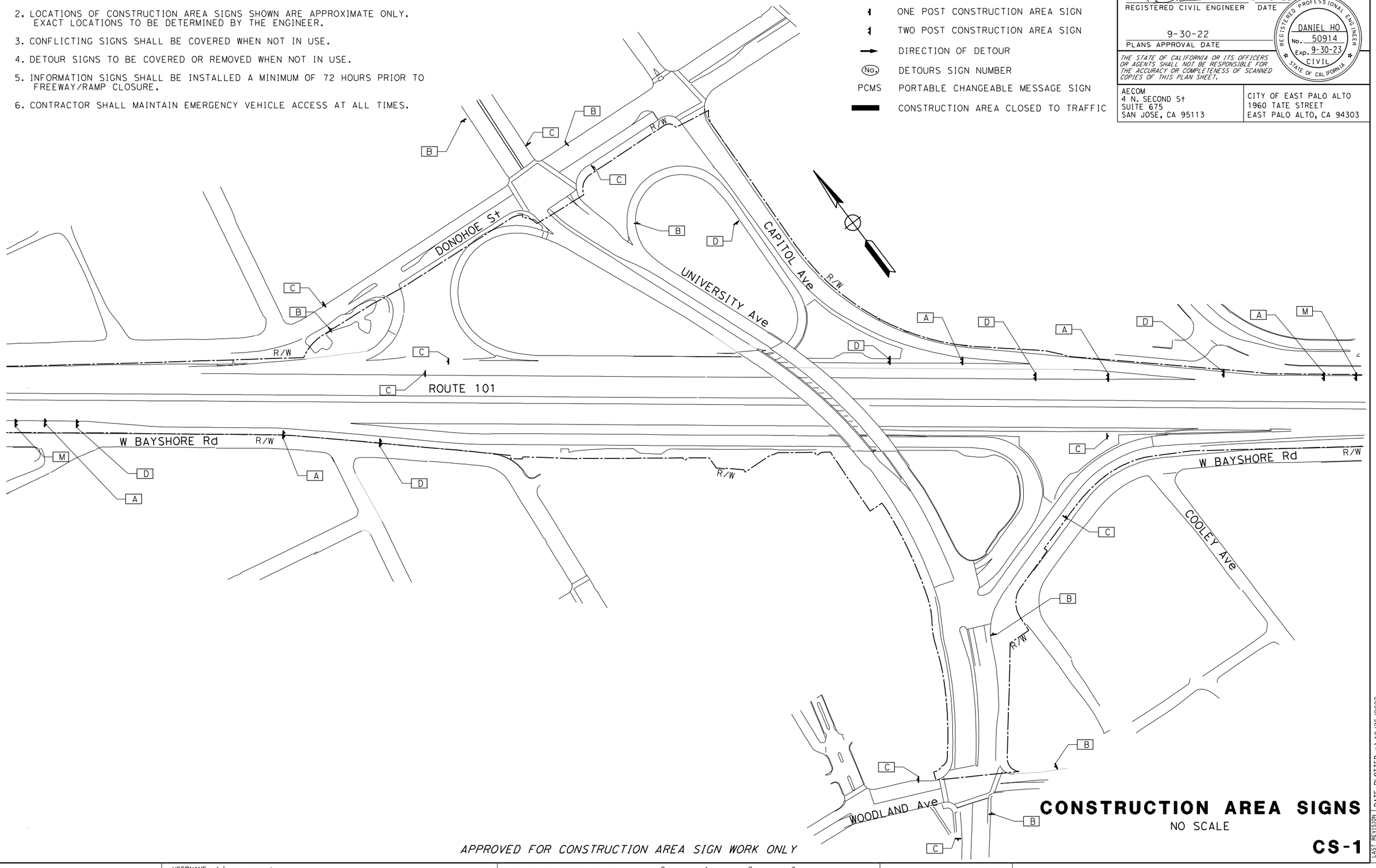

CONSTRUCTION AREA SIGNS

NO SCALE

CS-1

APPROVED FOR CONSTRUCTION AREA SIGN WORK ONLY

REVISED BY	JC		
DATE REVISED	9-15-22		
CALCULATED-DESIGNED BY	NELSON HOM		
CHECKED BY	DANIEL HO		
CONSULTANT FUNCTIONAL SUPERVISOR	HOWARD MICHAEL		
STATE OF CALIFORNIA - DEPARTMENT OF TRANSPORTATION	Caltrans		

LAST REVISION 9-15-22
DATE PLOTTED => 10/26/2022
TIME PLOTTED => 3:06:03 PM

BORDER LAST REVISED 8/1/2016
USERNAME => jose.coronel
DGN FILE => 04000007591ca001.dgn
RELATIVE BORDER SCALE IS IN INCHES 0 1 2 3
UNIT 0703
PROJECT NUMBER & PHASE 04000007591

Dist	COUNTY	ROUTE	POST MILES TOTAL PROJECT	SHEET No.	TOTAL SHEETS
04	SM	101	0.8/1.1	41	136

REGISTERED CIVIL ENGINEER — DATE: 9-15-22

PLANS APPROVAL DATE: 9-30-22

REGISTERED PROFESSIONAL ENGINEER — DANIEL HO — No. 50914 — Exp. 9-30-23 — CIVIL — STATE OF CALIFORNIA

THE STATE OF CALIFORNIA OR ITS OFFICERS OR AGENTS SHALL NOT BE RESPONSIBLE FOR THE ACCURACY OR COMPLETENESS OF SCANNED COPIES OF THIS PLAN SHEET.

AECOM
4 N. SECOND St
SUITE 675
SAN JOSE, CA 95113

CITY OF EAST PALO ALTO
1960 TATE STREET
EAST PALO ALTO, CA 94303

STATIONARY MOUNTED CONSTRUCTION AREA SIGNS

SHEET No.	SIGN No. ☐	SIGN CODE	PANEL SIZE in x in	SIGN MESSAGE	No. OF POST AND SIZE	No. OF SIGNS (N) (EA)
CS-1	A	W20-1	60 x 60	ROAD WORK AHEAD	2 - 4" x 6"	5
CS-1	B	W20-1	48 x 48	ROAD WORK AHEAD	1 - 4" x 6"	6
CS-1	C	G20-2	36 x 18	END ROAD WORK	1 - 4" x 4"	7
CS-1	D	C40 (CA)	72 x 36	TRAFFIC FINES DOUBLED IN CONSTRUCTION ZONES	2 - 4" x 6"	5
CS-1	M	SPECIAL	90 x 60	CONSTRUCTION PROJECT FUNDING SIGNS	2 - 6" x 6"	2
					TOTAL	25

(N): NOT A SEPARATE BID ITEM.

APPROVED FOR CONSTRUCTION AREA SIGN WORK ONLY

CONSTRUCTION AREA SIGNS QUANTITIES

CS-2

REVISED BY	DATE REVISED
JC	9-15-22

CALCULATED-DESIGNED BY	CHECKED BY
NELSON HOM	DANIEL HO

CONSULTANT FUNCTIONAL SUPERVISOR: HOWARD MICHAEL

STATE OF CALIFORNIA - DEPARTMENT OF TRANSPORTATION — Caltrans

LAST REVISION 9-15-22 | DATE PLOTTED => 10/26/2022 | TIME PLOTTED => 3:07:14 PM

BORDER LAST REVISED 8/1/2016 | USERNAME => jose.coronel | DGN FILE => 040000075911a002.dgn | RELATIVE BORDER SCALE IS IN INCHES 0 1 2 3 | UNIT 0703 | PROJECT NUMBER & PHASE 04000007591

Dist	COUNTY	ROUTE	POST MILES TOTAL PROJECT	SHEET No.	TOTAL SHEETS
04	SM	101	0.8/1.1	42	136

REGISTERED CIVIL ENGINEER 9-15-22 DATE

9-30-22 PLANS APPROVAL DATE

REGISTERED PROFESSIONAL ENGINEER DANIEL HO No. 50914 Exp. 9-30-23 CIVIL STATE OF CALIFORNIA

THE STATE OF CALIFORNIA OR ITS OFFICERS OR AGENTS SHALL NOT BE RESPONSIBLE FOR THE ACCURACY OR COMPLETENESS OF SCANNED COPIES OF THIS PLAN SHEET.

AECOM
4 N. SECOND St
SUITE 675
SAN JOSE, CA 95113

CITY OF EAST PALO ALTO
1960 TATE STREET
EAST PALO ALTO, CA 94303

NOTES:

1. SEE STANDARd PLAN T10 FOR FREEWAY CLOSURE. SEE STANDARd PLAN T14 FOR RAMP CLOSURE.
2. LOCATIONS OF CONSTRUCTION AREA SIGNS SHOWN ARE APPROXIMATE ONLY. EXACT LOCATIONS TO BE DETERMINED BY THE ENGINEER.
3. CONFLICTING SIGNS SHALL BE COVERED WHEN NOT IN USE.
4. DETOUR SIGNS TO BE COVERED OR REMOVED WHEN NOT IN USE
5. INFORMATION SIGNS SHALL BE INSTALLED A MINIMUM OF 72 HOURS PRIOR TO FREEWAY/RAMP CLOSURE.
6. CONTRACTOR SHALL MAINTAIN EMERGENCY VEHICLE ACCESS AT ALL TIMES.

LEGEND:

- ONE POST CONSTRUCTION AREA SIGN LOCATION
- TWO POST CONSTRUCTION AREA SIGN LOCATION
- DIRECTION OF DETOUR
- (X) CONSTRUCTION AREA SIGN LETTER
- **X** RAMP/ROAD LANES CLOSED

TRAFFIC SIGNS USED

SPECIAL "A"	SPECIAL "B"	SPECIAL "C"	SPECIAL "D"
RAMP TO UNIVERSITY AVE CLOSED USE DETOUR	TO PALO ALTO	NB 101 CLOSED USE DETOUR	NB 101 RAMP CLOSED USE DETOUR
66"x36" 6"C CAPS BLACK ON ORANGE	66"x12" 6"C CAPS BLACK ON ORANGE	66"x24" 6"C CAPS BLACK ON ORANGE	66"x24" 6"C CAPS BLACK ON ORANGE

SPECIAL "E"	SPECIAL "F"	SPECIAL "G"
SB 101 CLOSED USE DETOUR	TO 101 SOUTH	TO 101 NORTH
66"x24" 6"C CAPS BLACK ON ORANGE	66"x12" 6"C CAPS BLACK ON ORANGE	66"x12" 6"C CAPS BLACK ON ORANGE

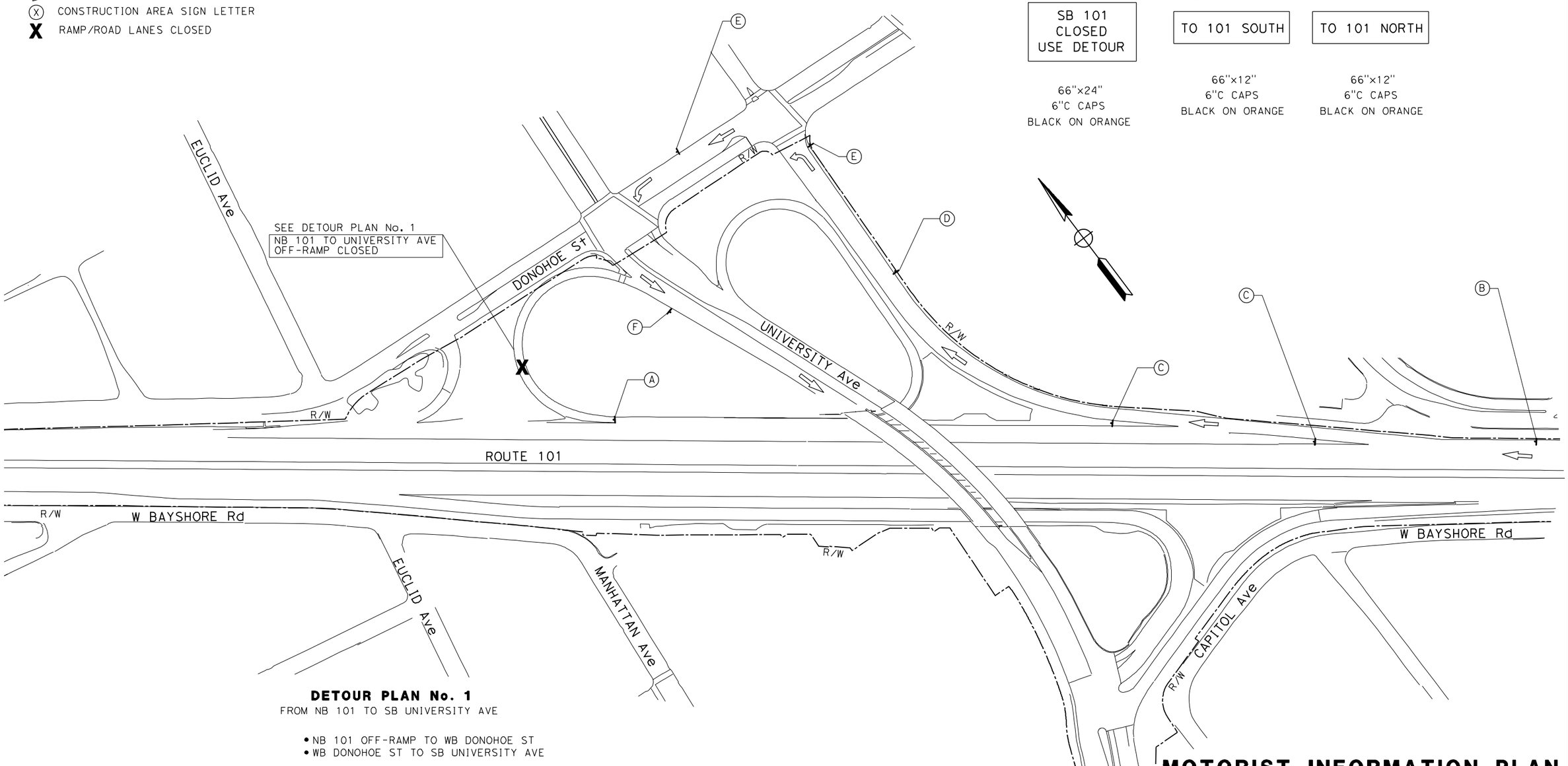

DETOUR PLAN No. 1
FROM NB 101 TO SB UNIVERSITY AVE

- NB 101 OFF-RAMP TO WB DONOHOE ST
- WB DONOHOE ST TO SB UNIVERSITY AVE

MOTORIST INFORMATION PLAN

NO SCALE

APPROVED FOR MOTORIST INFORMATION WORK ONLY

MI-1

STATE OF CALIFORNIA - DEPARTMENT OF TRANSPORTATION
Caltrans

CONSULTANT FUNCTIONAL SUPERVISOR: HOWARD MICHAEL
CALCULATED-DESIGNED BY: JOSE CORONEL
CHECKED BY: DANIEL HO
REVISED BY: JC
DATE REVISED: 9-15-22

LAST REVISION 9-15-22
DATE PLOTTED => 10/27/2022
TIME PLOTTED => 10:09:25 AM

Dist	COUNTY	ROUTE	POST MILES TOTAL PROJECT	SHEET No.	TOTAL SHEETS
04	SM	101	0.8/1.1	43	136

REGISTERED CIVIL ENGINEER — DATE 9-15-22

PLANS APPROVAL DATE 9-30-22

REGISTERED PROFESSIONAL ENGINEER — DANIEL HO — No. 50914 — Exp. 9-30-23 — CIVIL — STATE OF CALIFORNIA

THE STATE OF CALIFORNIA OR ITS OFFICERS OR AGENTS SHALL NOT BE RESPONSIBLE FOR THE ACCURACY OR COMPLETENESS OF SCANNED COPIES OF THIS PLAN SHEET.

AECOM
4 N. SECOND St
SUITE 675
SAN JOSE, CA 95113

CITY OF EAST PALO ALTO
1960 TATE STREET
EAST PALO ALTO, CA 94303

NOTES:

1. PCMS MUST BE INSTALLED AND TURNED ON FOURTEEN (14) DAYS PRIOR TO 101 SOUTH CLOSURE. PCMS SHALL READ:

101 SOUTH CLOSED	→	DATE & TIME

DURING 101 SOUTH CLOSURE, PCMS SHALL READ:

101 SOUTH CLOSED	→	USE DETOUR

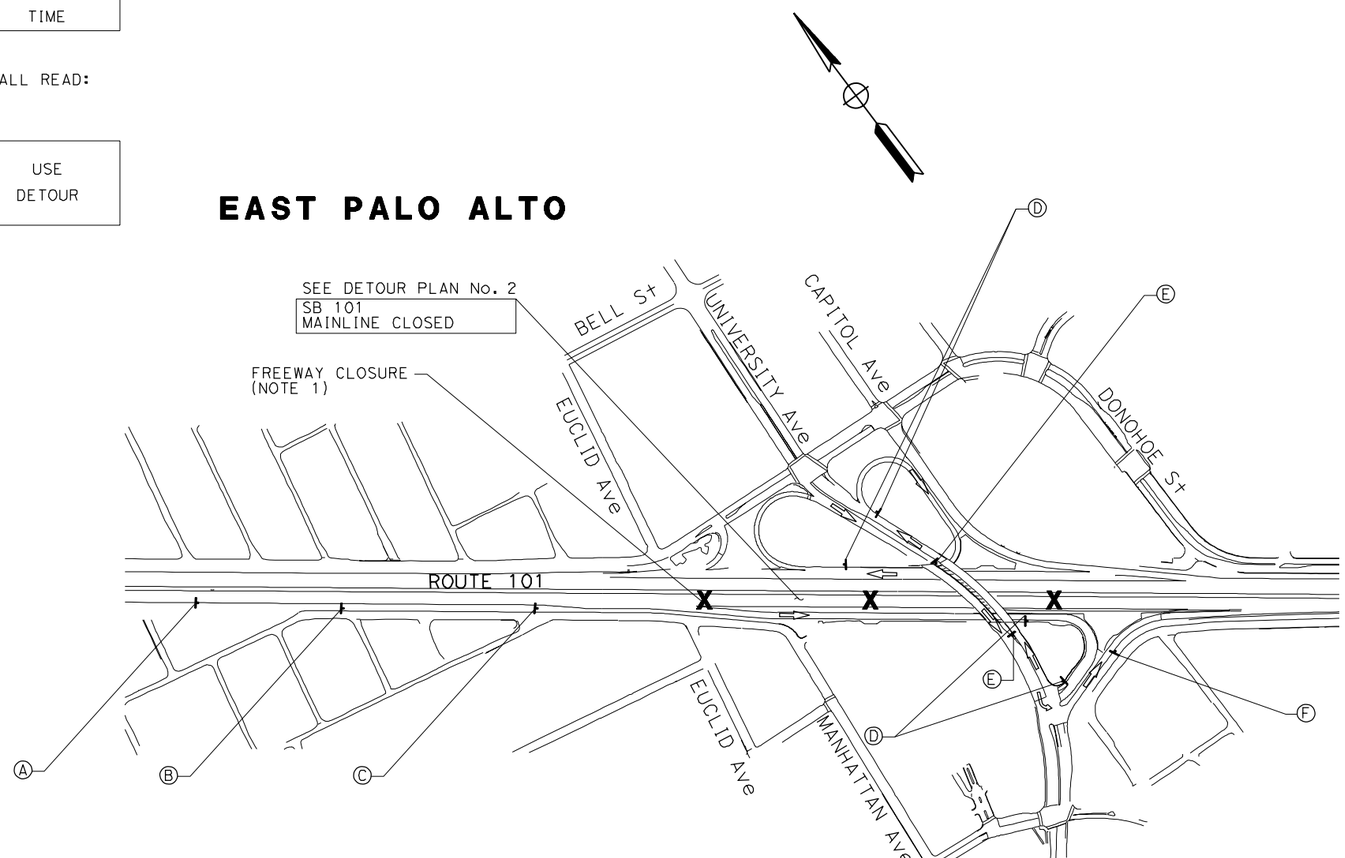

DETOUR PLAN No. 2
SB 101 MAINLINE

- SB 101 OFF-RAMP TO UNIVERSITY AVE
- NB UNIVERSITY AVE TO NB 101 ON-RAMP
- NB 101 TO UNIVERSITY AVE OFF-RAMP
- SB UNIVERSITY AVE TO SB 101 ON-RAMP

FOR LEGEND AND NOTES SEE SHEET MI-1

MOTORIST INFORMATION PLAN

NO SCALE

MI-2

APPROVED FOR MOTORIST INFORMATION WORK ONLY

REVISED BY	JC
DATE REVISED	9-15-22
NELSON HOM	DANIEL HO
CALCULATED-DESIGNED BY	
CHECKED BY	
CONSULTANT FUNCTIONAL SUPERVISOR	HOWARD MICHAEL

STATE OF CALIFORNIA - DEPARTMENT OF TRANSPORTATION — Caltrans

LAST REVISION 9-15-22
DATE PLOTTED => 10/27/2022
TIME PLOTTED => 10:09:42 AM

Dist	COUNTY	ROUTE	POST MILES TOTAL PROJECT	SHEET No.	TOTAL SHEETS
04	SM	101	0.8/1.1	44	136

REGISTERED CIVIL ENGINEER — DATE 9-15-22

PLANS APPROVAL DATE 9-30-22

REGISTERED PROFESSIONAL ENGINEER — DANIEL HO — No. 50914 — Exp. 9-30-23 — CIVIL — STATE OF CALIFORNIA

THE STATE OF CALIFORNIA OR ITS OFFICERS OR AGENTS SHALL NOT BE RESPONSIBLE FOR THE ACCURACY OR COMPLETENESS OF SCANNED COPIES OF THIS PLAN SHEET.

AECOM
4 N. SECOND St
SUITE 675
SAN JOSE, CA 95113

CITY OF EAST PALO ALTO
1960 TATE STREET
EAST PALO ALTO, CA 94303

NOTES:

1. PCMS MUST BE INSTALLED AND TURNED ON FOURTEEN (14) DAYS PRIOR TO UNIVERSITY AVE RAMP CLOSURE. PCMS SHALL READ:

UNIVERSITY AVE RAMP CLOSED	→	DATE & TIME

DURING UNIVERSITY AVE RAMP CLOSURE, PCMS SHALL READ:

UNIVERSITY AVE RAMP CLOSED	→	USE DETOUR

EAST PALO ALTO

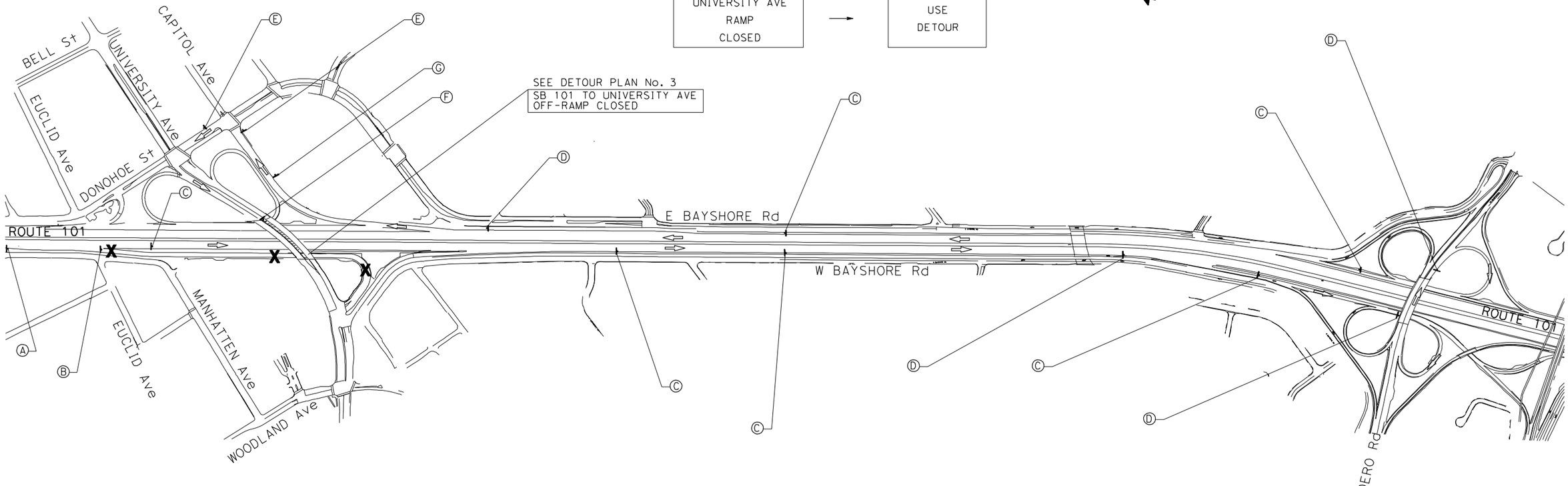

DETOUR PLAN No. 3
FROM SB 101 TO UNIVERSITY AVE

- SB 101 OFF-RAMP TO EMBARCADERO Rd
- NB EMBARADERO Rd TO NB 101 ON-RAMP
- NB 101 TO DONOHOE St OFF-RAMP
- WB DONOHOE St TO UNIVERISTY AVE

FOR LEGEND AND NOTES SEE SHEET MI-1

MOTORIST INFORMATION PLAN

NO SCALE

APPROVED FOR MOTORIST INFORMATION WORK ONLY

MI-3

REVISED BY	JC		
DATE REVISED	9-15-22		
NELSON HOM			
DANIEL HO			
CALCULATED-DESIGNED BY			
CHECKED BY			
CONSULTANT FUNCTIONAL SUPERVISOR			
HOWARD MICHAEL			

STATE OF CALIFORNIA - DEPARTMENT OF TRANSPORTATION

Caltrans

LAST REVISION 9-15-22
DATE PLOTTED => 1/25/2023
TIME PLOTTED => 3:57:55 PM

BORDER LAST REVISED 8/1/2016 | USERNAME => jose.coronel | DGN FILE => 04000007591 tb003.dgn | RELATIVE BORDER SCALE IS IN INCHES 0 1 2 3 | UNIT 0703 | PROJECT NUMBER & PHASE 04000007591

Dist	COUNTY	ROUTE	POST MILES TOTAL PROJECT	SHEET No.	TOTAL SHEETS
04	SM	101	0.8/1.1	45	136

REGISTERED CIVIL ENGINEER — DATE 9-15-22

PLANS APPROVAL DATE 9-30-22

REGISTERED PROFESSIONAL ENGINEER — DANIEL HO — No. 50914 — Exp. 9-30-23 — CIVIL — STATE OF CALIFORNIA

THE STATE OF CALIFORNIA OR ITS OFFICERS OR AGENTS SHALL NOT BE RESPONSIBLE FOR THE ACCURACY OR COMPLETENESS OF SCANNED COPIES OF THIS PLAN SHEET.

AECOM
4 N. SECOND St
SUITE 675
SAN JOSE, CA 95113

CITY OF EAST PALO ALTO
1960 TATE STREET
EAST PALO ALTO, CA 94303

EAST PALO ALTO

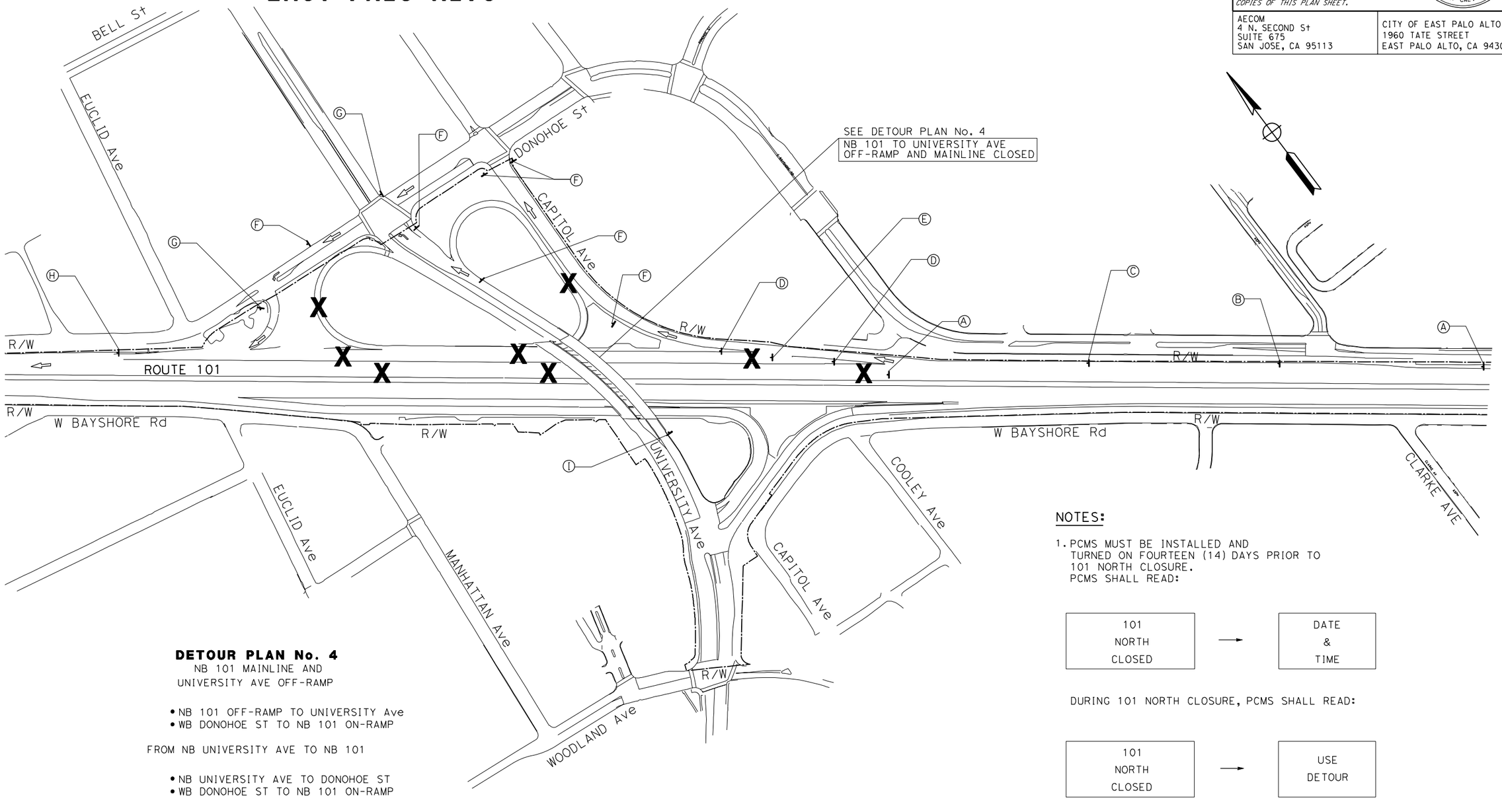

DETOUR PLAN No. 4
NB 101 MAINLINE AND
UNIVERSITY AVE OFF-RAMP

- NB 101 OFF-RAMP TO UNIVERSITY Ave
- WB DONOHOE ST TO NB 101 ON-RAMP

FROM NB UNIVERSITY AVE TO NB 101

- NB UNIVERSITY AVE TO DONOHOE ST
- WB DONOHOE ST TO NB 101 ON-RAMP

FOR LEGEND AND NOTES SEE SHEET MI-1

NOTES:

1. PCMS MUST BE INSTALLED AND TURNED ON FOURTEEN (14) DAYS PRIOR TO 101 NORTH CLOSURE. PCMS SHALL READ:

101 NORTH CLOSED	→	DATE & TIME

DURING 101 NORTH CLOSURE, PCMS SHALL READ:

101 NORTH CLOSED	→	USE DETOUR

MOTORIST INFORMATION PLAN

NO SCALE

MI-4

APPROVED FOR MOTORIST INFORMATION WORK ONLY

REVISED BY	DATE REVISED
JC	9-15-22

CALCULATED-DESIGNED BY	CHECKED BY
JOSE CORONEL	DANIEL HO

CONSULTANT FUNCTIONAL SUPERVISOR: HOWARD MICHAEL

STATE OF CALIFORNIA - DEPARTMENT OF TRANSPORTATION — Caltrans®

LAST REVISION 9-15-22 — DATE PLOTTED => 1/25/2023 — TIME PLOTTED => 3:54:19 PM

BORDER LAST REVISED 8/1/2016 | USERNAME => jose.coronel | DGN FILE => 040000075911b004.dgn | RELATIVE BORDER SCALE IS IN INCHES 0 1 2 3 | UNIT 0703 | PROJECT NUMBER & PHASE 04000007591

Dist	COUNTY	ROUTE	POST MILES TOTAL PROJECT	SHEET No.	TOTAL SHEETS
04	SM	101	0.8/1.1	46	136

REGISTERED CIVIL ENGINEER — DATE 9-15-22

PLANS APPROVAL DATE 9-30-22

REGISTERED PROFESSIONAL ENGINEER — DANIEL HO — No. 50914 — Exp. 9-30-23 — CIVIL — STATE OF CALIFORNIA

THE STATE OF CALIFORNIA OR ITS OFFICERS OR AGENTS SHALL NOT BE RESPONSIBLE FOR THE ACCURACY OR COMPLETENESS OF SCANNED COPIES OF THIS PLAN SHEET.

AECOM
4 N. SECOND St
SUITE 675
SAN JOSE, CA 95113

CITY OF EAST PALO ALTO
1960 TATE STREET
EAST PALO ALTO, CA 94303

STATIONARY MOUNTED CONSTRUCTION AREA SIGNS

SHEET No.	SIGN No.	SIGN DESIGNATION	PANEL SIZE	POST SIZE	ROADSIDE SIGN WOOD (N) ONE POST	No. o SIGNS (N)	No. o PCMS (N)	SIGN MESSAGE
				4" x 4"	EA	EA		
MI-1	A	SC6-4 (CA)	48" x 18"	X	X	1		"RAMP CLOSED"
	B	SPECIAL "A"	66" x 36"	X	X	1		"RAMP TO UNIVERSITY AVE CLOSED USE DETOUR"
	C	SC18(CA)	48" x 18"	X	X	2		" (➚) EXIT"
		SPECIAL "B"	66" x 12"					"TO PALO ALTO"
	D	M4-9L	48" x 18"	X	X	1		" (⬅) DETOUR"
	E	M4-9L	48" x 18"	X	X	2		" (⬅) DETOUR"
		SPECIAL "B"	66" x 12"					"TO PALO ALTO"
	F	M4-8a	48" x 18"	X	X	1		"END DETOUR"
MI-2	A	PCMS					1	"SB 101 CLOSED..."
	B	SPECIAL "E"	66" x 24"	X	X	1		"SB 101 CLOSED USE DETOUR"
	C	SC18(CA)	48" x 18"	X	X	1		" (➚) EXIT"
		SPECIAL "F"	66" x 12"					"TO 101 SOUTH"
	D	M4-9R	48" x 18"	X	X	2		" (➡) DETOUR"
		SPECIAL "B"	66" x 12"					"TO 101 SOUTH"
	E	M4-9L	48" x 18"	X	X	2		" (⬅) DETOUR"
		SPECIAL "B"	66" x 12"					"TO 101 SOUTH"
	F	M4-8a	24" x 18"	X	X	1		"END DETOUR"
MI-3	A	PCMS					1	"UNIVERSITY AVE RAMP CLOSED"
	B	SPECIAL "A"	66" x 36"	X	X	1		"RAMP TO UNIVERSITY AVE CLOSED USE DETOUR"
	C	SC3 (CA)	48" x 18"	X	X	6		" (⬆) DETOUR"
		SPECIAL "B"	66" x 12"					"TO PALO ALTO "
	D	M4-8	24" x 18"	X	X	4		"DETOUR"
		SPECIAL "B"	66" x 12"					"TO PALO ALTO"
		M6-2	21" x 15"					"(➚)" ARROW
	E	M4-9L	48" x 18"	X	X	2		" (⬅) DETOUR"
		SPECIAL "B"	66" x 12"					"TO PALO ALTO"
	F	M4-8a	24" x 18"	X	X	1		"END DETOUR"
	G	M4-9L	48" x 18"	X	X	1		" (⬅) DETOUR"
MI-4	A	PCMS					2	"NB 101 CLOSED..."
	B	SPECIAL "C"	66" x 24"	X	X	1		"NB 101 CLOSED USE DETOUR"
	C	SC18(CA)	48" x 18"	X	X	1		" (➚) EXIT"
		SPECIAL "G"	66" x 12"					"TO 101 NORTH"
	D	M4-9R	48" x 18"	X	X	2		" (➡) DETOUR"
		SPECIAL "G"	66" x 12"					"TO 101 NORTH"
	E	SC6-4 (CA)	48" x 18"	X	X	1		"RAMP CLOSED"
	F	M4-9L	48" x 18"	X	X	6		" (⬅) DETOUR"
		SPECIAL "G"	66" x 12"					"TO 101 NORTH"
	G	SC3 (CA)	48" x 18"	X	X	2		" (⬆) DETOUR"
		SPECIAL "B"	66" x 12"					"TO 101 NORTH"
	H	M4-8a	48" x 18"	X	X	1		"END DETOUR"
	I	SPECIAL "D"	66" x 24"	X	X	1		"NB 101 RAMP CLOSED USE DETOUR"

N - NOT A SEPARATE BID ITEM.

MOTORIST INFORMATION QUANTITES

MIQ-1

REVISED BY	DATE REVISED
NELSON HOM	9-15-22

CALCULATED-DESIGNED BY	CHECKED BY
DANIEL HO	

CONSULTANT FUNCTIONAL SUPERVISOR: HOWARD MICHAEL

STATE OF CALIFORNIA - DEPARTMENT OF TRANSPORTATION — Caltrans

LAST REVISION 9-15-22

DATE PLOTTED => 10/27/2022
TIME PLOTTED => 10:14:31 AM

BORDER LAST REVISED 8/1/2016

USERNAME => jose.coronel
DGN FILE => 040000075911d001.dgn

RELATIVE BORDER SCALE IS IN INCHES 0 1 2 3

UNIT 0703

PROJECT NUMBER & PHASE 04000007591

Dist	COUNTY	ROUTE	POST MILES TOTAL PROJECT	SHEET No.	TOTAL SHEETS
04	SM	101	0.8/1.1	47	136

REGISTERED CIVIL ENGINEER — DATE 9-15-22

PLANS APPROVAL DATE 9-30-22

REGISTERED PROFESSIONAL ENGINEER — DANIEL HO — No. 50914 — Exp. 9-30-23 — CIVIL — STATE OF CALIFORNIA

THE STATE OF CALIFORNIA OR ITS OFFICERS OR AGENTS SHALL NOT BE RESPONSIBLE FOR THE ACCURACY OR COMPLETENESS OF SCANNED COPIES OF THIS PLAN SHEET.

AECOM
4 N. SECOND St
SUITE 675
SAN JOSE, CA 95113

CITY OF EAST PALO ALTO
1960 TATE STREET
EAST PALO ALTO, CA 94303

NOTE:

FOR ACCURATE RIGHT OF WAY DATA, CONTACT RIGHT OF WAY ENGINEERING AT THE DISTRICT OFFICE.

LEGEND:

- No. — PAVEMENT DELINEATION DETAIL
- TYPE III (L OR R) ARROW
- TEMPORARY RAILING (TYPE K)
- TEMPORARY CRASH CUSHION MODULE (ARRAY 'TS14')
- CHANNELIZER (SURFACE MOUNTED)
- "EXPRESS LANE" PAVEMENT MARKINGS
- TEMPORARY SIDEWALK
- CONSTRUCTION THIS STAGE
- CONSTRUCTION THIS STAGE WITH RAMP CLOSURE

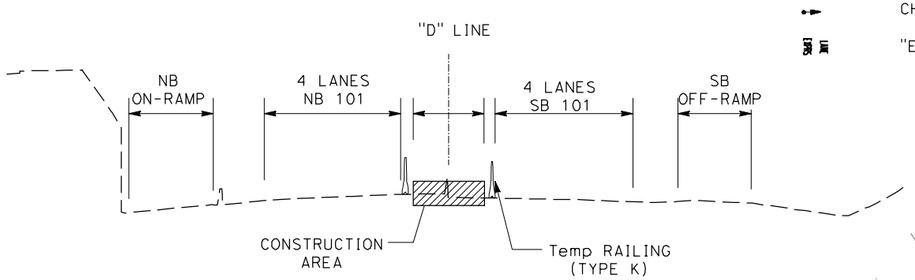

BENT 3
"D" 273+90 TO 274+14
NO SCALE

STAGE 1 CONSTRUCTION:

1. MODIFY PCC ISLAND AND PAVEMENT AT NB LOOP OFF-RAMP.
2. CONSTRUCT POC ABUTMENTS AND BENTS.
3. COMPLETE CONSTRUCTION OF NB LOOP OFF-RAMP WITH RAMP CLOSURE
4. CONSTRUCT MEDIAN ISLAND MODIFICATIONS.

STAGE 1 TRAFFIC:

1. MAINTAIN EXISTING TRAFFIC LANES UNLESS SHOWN OTHERWISE.
2. SHIFT TRAFFIC ON ROUTE 101 AND RAMPS TO ACCOMMODATE CONSTRUCTION.
3. SIDEWALK AND CROSSWALK TO REMAIN OPEN AT ALL TIMES.
4. SHIFT TRAFFIC ON UNIVERSITY AVE TO ACCOMMODATE CONSTRUCTION.
5. MAINTAIN TRAFFIC SIGNALS FULLY OPERATIONAL THROUGH ALL STAGES OF CONSTRUCTION.

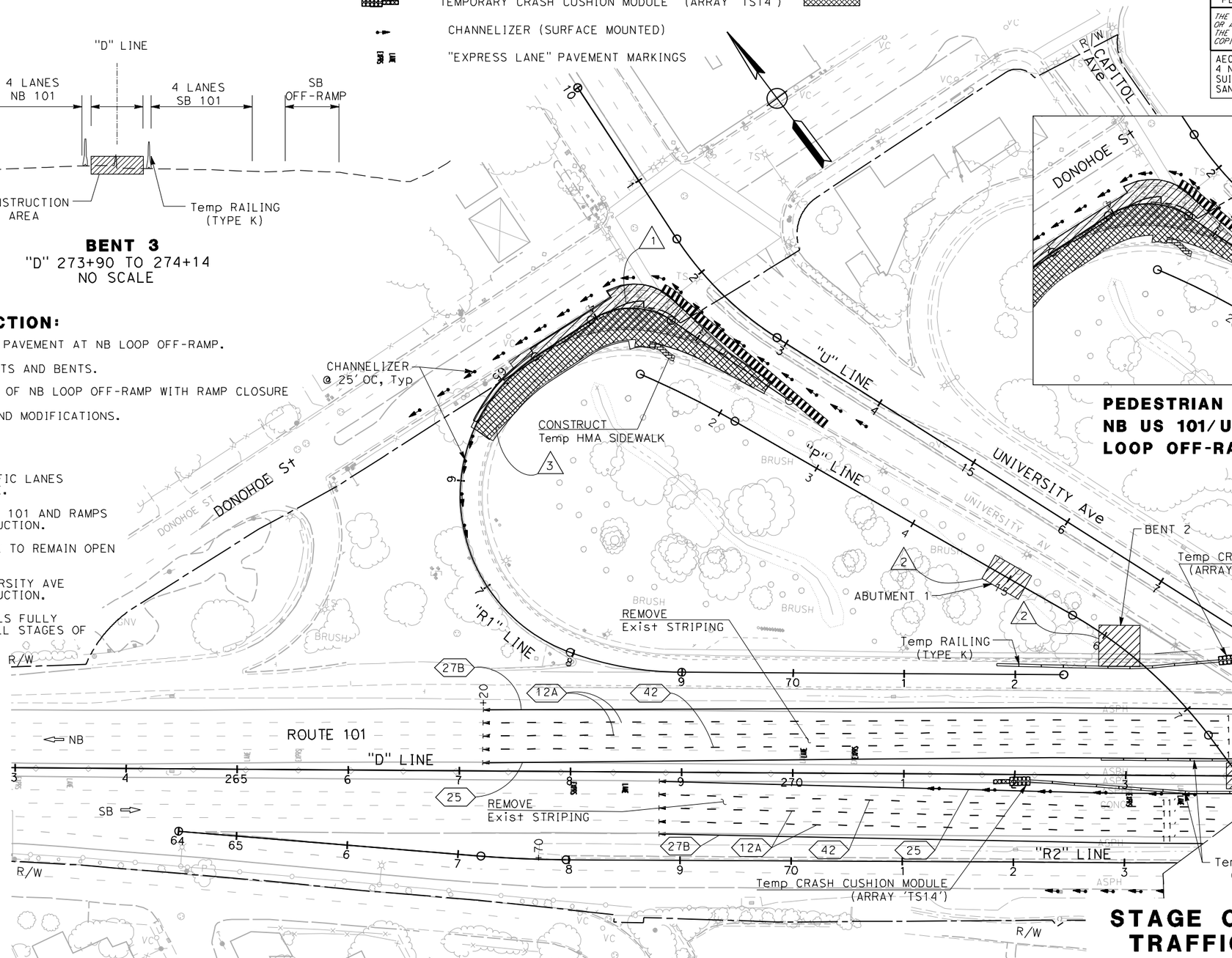

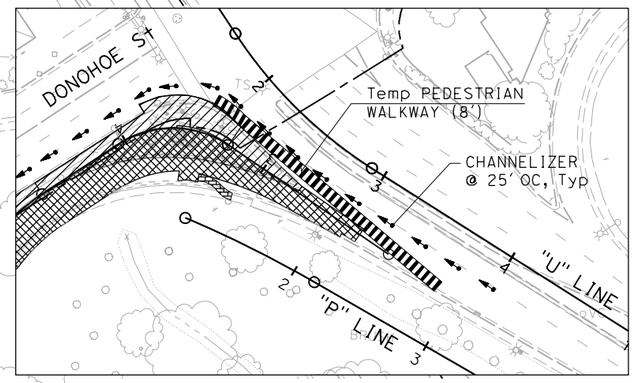

PEDESTRIAN DETOUR DURING NB US 101/UNIVERSITY AVE LOOP OFF-RAMP CLOSURE

STAGE CONSTRUCTION AND TRAFFIC HANDLING PLAN STAGE 1

SCALE 1" = 50'

APPROVED FOR STAGE CONSTRUCTION AND TRAFFIC HANDLING WORK ONLY

SC-1

LAST REVISION 9-15-22
DATE PLOTTED => 10/27/2022
TIME PLOTTED => 10:26:17 AM

STATE OF CALIFORNIA - DEPARTMENT OF TRANSPORTATION — Caltrans
CONSULTANT FUNCTIONAL SUPERVISOR: HOWARD MICHAEL
CALCULATED-DESIGNED BY: JOSE CORONEL
CHECKED BY: DANIEL HO
REVISED BY: JC — DATE REVISED: 9-15-22

BORDER LAST REVISED 8/1/2016 | USERNAME => jose.coronel | DGN FILE => 04000007591ma001.dgn | RELATIVE BORDER SCALE IS IN INCHES 0 1 2 3 | UNIT 0703 | PROJECT NUMBER & PHASE 04000007591

NOTE:

FOR ACCURATE RIGHT OF WAY DATA, CONTACT
RIGHT OF WAY ENGINEERING AT THE DISTRICT OFFICE.

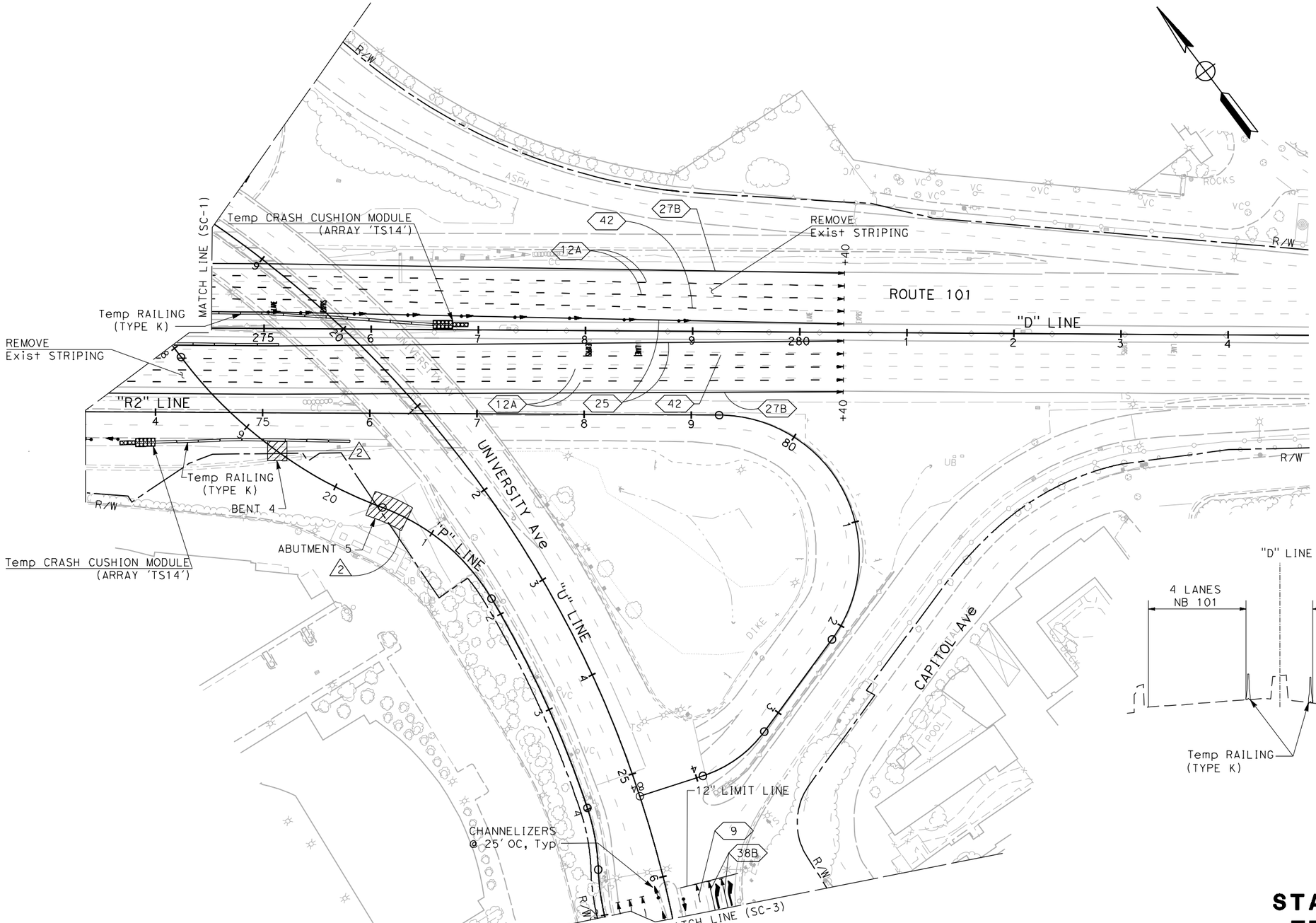

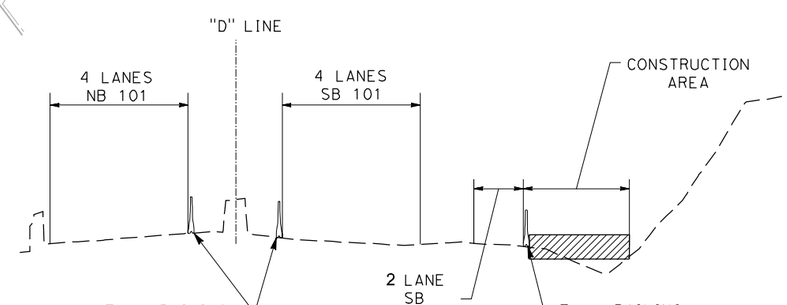

BENT 4
NO SCALE

FOR NOTES AND LEGEND
SEE SHEET SC-1

STAGE CONSTRUCTION AND TRAFFIC HANDLING PLAN
STAGE 1
SCALE 1" = 50'

APPROVED FOR STAGE CONSTRUCTION AND TRAFFIC HANDLING WORK ONLY

SC-2

Dist	COUNTY	ROUTE	POST MILES TOTAL PROJECT	SHEET No.	TOTAL SHEETS
04	SM	101	0.8/1.1	48	136

REGISTERED CIVIL ENGINEER — DATE 9-15-22

DANIEL HO, No. 50914, Exp. 9-30-23, CIVIL, REGISTERED PROFESSIONAL ENGINEER, STATE OF CALIFORNIA

9-30-22
PLANS APPROVAL DATE

THE STATE OF CALIFORNIA OR ITS OFFICERS OR AGENTS SHALL NOT BE RESPONSIBLE FOR THE ACCURACY OR COMPLETENESS OF SCANNED COPIES OF THIS PLAN SHEET.

AECOM
4 N. SECOND St
SUITE 675
SAN JOSE, CA 95113

CITY OF EAST PALO ALTO
1960 TATE STREET
EAST PALO ALTO, CA 94303

REVISED BY	DATE REVISED
JC	3-6-23
JC	9-15-22

CALCULATED-DESIGNED BY: JOSE CORONEL
CHECKED BY: DANIEL HO
CONSULTANT FUNCTIONAL SUPERVISOR: HOWARD MICHAEL
STATE OF CALIFORNIA - DEPARTMENT OF TRANSPORTATION

LAST REVISION 9-15-22
DATE PLOTTED => 10/27/2022
TIME PLOTTED => 10:26:02 AM

BORDER LAST REVISED 8/1/2016
USERNAME => jose.coronel
DGN FILE => 04000007591ma002.dgn
RELATIVE BORDER SCALE IS IN INCHES 0 1 2 3
UNIT 0703
PROJECT NUMBER & PHASE 04000007591

Dist	COUNTY	ROUTE	POST MILES TOTAL PROJECT	SHEET No.	TOTAL SHEETS
04	SM	101	0.8/1.1	49	136

9-15-22
REGISTERED CIVIL ENGINEER DATE

9-30-22
PLANS APPROVAL DATE

REGISTERED PROFESSIONAL ENGINEER
DANIEL HO
No. 50914
Exp. 9-30-23
CIVIL
STATE OF CALIFORNIA

THE STATE OF CALIFORNIA OR ITS OFFICERS OR AGENTS SHALL NOT BE RESPONSIBLE FOR THE ACCURACY OR COMPLETENESS OF SCANNED COPIES OF THIS PLAN SHEET.

AECOM
4 N. SECOND St
SUITE 675
SAN JOSE, CA 95113

CITY OF EAST PALO ALTO
1960 TATE STREET
EAST PALO ALTO, CA 94303

NOTE:

FOR ACCURATE RIGHT OF WAY DATA, CONTACT
RIGHT OF WAY ENGINEERING AT THE DISTRICT OFFICE.

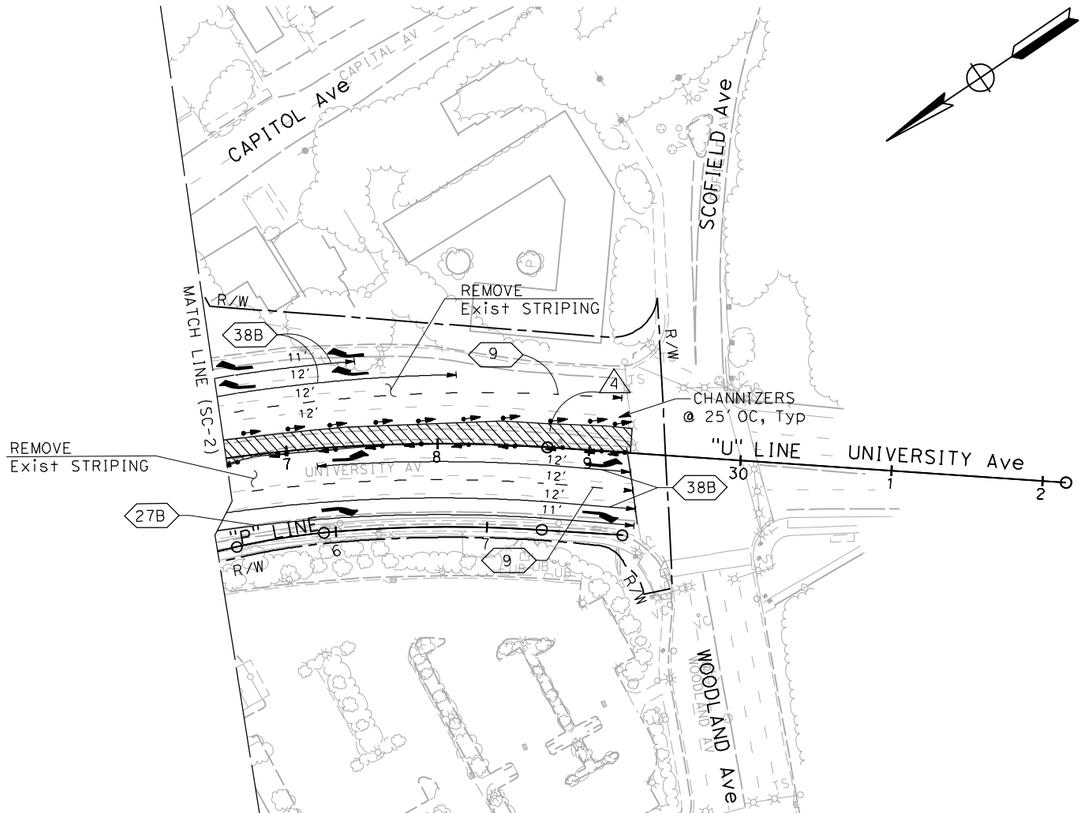

FOR NOTES AND LEGEND
SEE SHEET SC-1

STAGE CONSTRUCTION AND TRAFFIC HANDLING PLAN STAGE 1

SCALE 1" = 50'

SC-3

APPROVED FOR STAGE CONSTRUCTION AND TRAFFIC HANDLING WORK ONLY

REVISED BY	JC		
DATE REVISED	9-15-22		
CALCULATED-DESIGNED BY	JOSE CORONEL		
CHECKED BY	DANIEL HO		
CONSULTANT FUNCTIONAL SUPERVISOR	HOWARD MICHAEL		
STATE OF CALIFORNIA - DEPARTMENT OF TRANSPORTATION	Caltrans		

LAST REVISION 9-15-22
DATE PLOTTED => 10/27/2022
TIME PLOTTED => 10:28:24 AM

BORDER LAST REVISED 8/1/2016 | USERNAME => jose.coronel | DGN FILE => 04000007591ma003.dgn | RELATIVE BORDER SCALE IS IN INCHES 0 1 2 3 | UNIT 0703 | PROJECT NUMBER & PHASE 04000007591

Dist	COUNTY	ROUTE	POST MILES TOTAL PROJECT	SHEET No.	TOTAL SHEETS
04	SM	101	0.8/1.1	50	136

REGISTERED CIVIL ENGINEER 9-15-22 DATE

9-30-22
PLANS APPROVAL DATE

REGISTERED PROFESSIONAL ENGINEER DANIEL HO No. 50914 Exp. 9-30-23 CIVIL STATE OF CALIFORNIA

THE STATE OF CALIFORNIA OR ITS OFFICERS OR AGENTS SHALL NOT BE RESPONSIBLE FOR THE ACCURACY OR COMPLETENESS OF SCANNED COPIES OF THIS PLAN SHEET.

AECOM
4 N. SECOND St
SUITE 675
SAN JOSE, CA 95113

CITY OF EAST PALO ALTO
1960 TATE STREET
EAST PALO ALTO, CA 94303

NOTE:

FOR ACCURATE RIGHT OF WAY DATA, CONTACT RIGHT OF WAY ENGINEERING AT THE DISTRICT OFFICE.

STAGE 2 CONSTRUCTION:

5 CONSTRUCT POC SUPERSTRUCTURE AND CLASS 1 TRAIL.

STAGE 2 TRAFFIC:

5 MAINTAIN EXISTING TRAFFIC LANES UNLESS SHOWN OTHERWISE.

6 SHIFT PEDESTRIAN TRAFFIC ON UNIVERSITY AVE SOUTH OF ROUTE 101 TO TEMP WALKWAY.

7 SHIFT TRAFFIC ON UNIVERSITY AVE TOWARDS MEDIAN TO ACCOMMODATE CONSTRUCTION.

7A RESTORE SB OFF-RAMP TO 2 LANES.

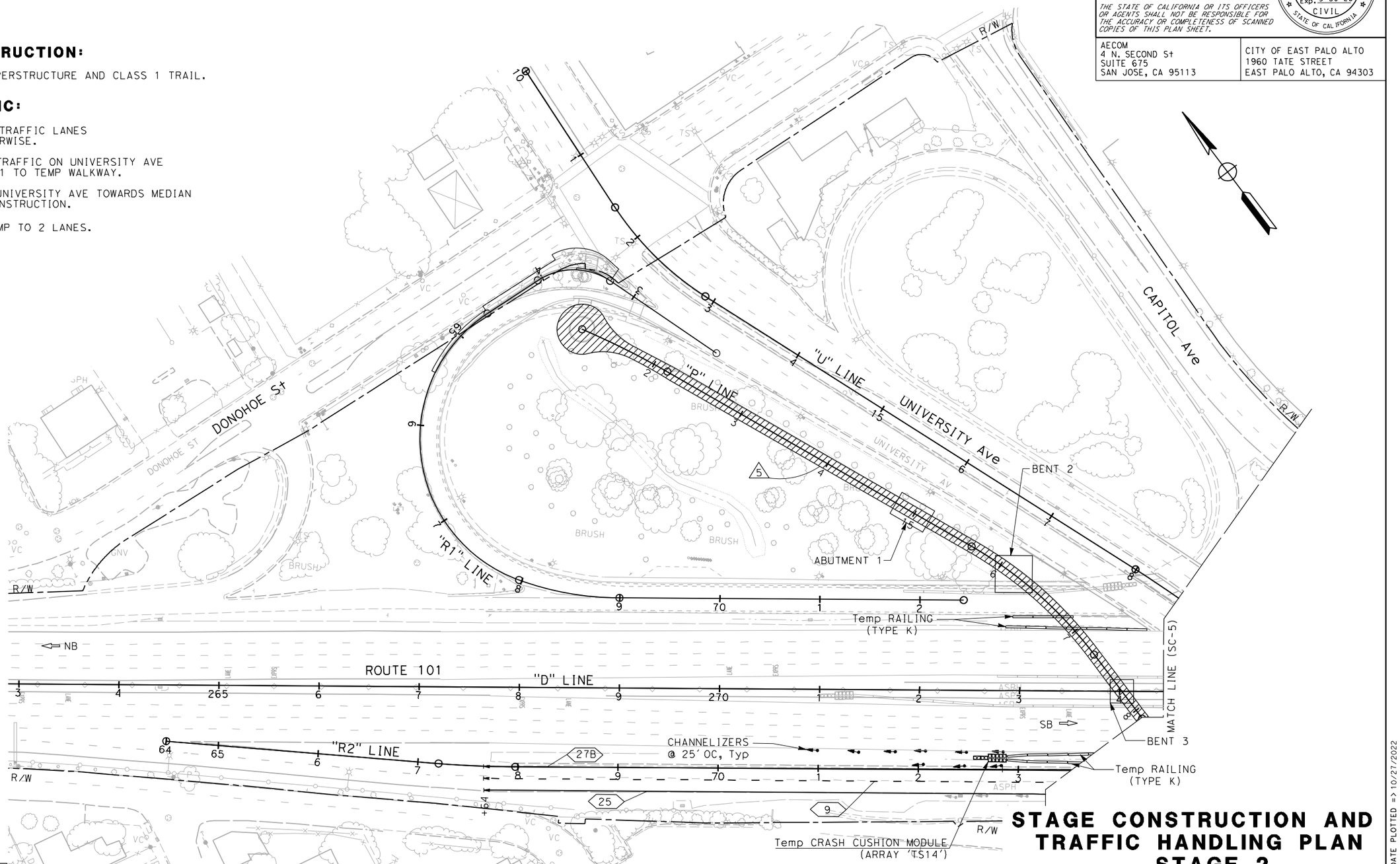

FOR NOTES AND LEGEND SEE SHEET SC-1

STAGE CONSTRUCTION AND TRAFFIC HANDLING PLAN STAGE 2

SCALE 1" = 50'

SC-4

APPROVED FOR STAGE CONSTRUCTION AND TRAFFIC HANDLING WORK ONLY

STATE OF CALIFORNIA - DEPARTMENT OF TRANSPORTATION
Caltrans

CONSULTANT FUNCTIONAL SUPERVISOR: HOWARD MICHAEL
CALCULATED-DESIGNED BY: JOSE CORONEL
CHECKED BY: DANIEL HO
REVISED BY: JC
DATE REVISED: 9-15-22

LAST REVISION 9-15-22
DATE PLOTTED => 10/27/2022
TIME PLOTTED => 10:28:43 AM

Dist	COUNTY	ROUTE	POST MILES TOTAL PROJECT	SHEET No.	TOTAL SHEETS
04	SM	101	0.8/1.1	51	136

REGISTERED CIVIL ENGINEER — DATE 9-15-22

PLANS APPROVAL DATE 9-30-22

REGISTERED PROFESSIONAL ENGINEER — DANIEL HO — No. 50914 — Exp. 9-30-23 — CIVIL — STATE OF CALIFORNIA

THE STATE OF CALIFORNIA OR ITS OFFICERS OR AGENTS SHALL NOT BE RESPONSIBLE FOR THE ACCURACY OR COMPLETENESS OF SCANNED COPIES OF THIS PLAN SHEET.

AECOM
4 N. SECOND St
SUITE 675
SAN JOSE, CA 95113

CITY OF EAST PALO ALTO
1960 TATE STREET
EAST PALO ALTO, CA 94303

NOTE:

FOR ACCURATE RIGHT OF WAY DATA, CONTACT RIGHT OF WAY ENGINEERING AT THE DISTRICT OFFICE.

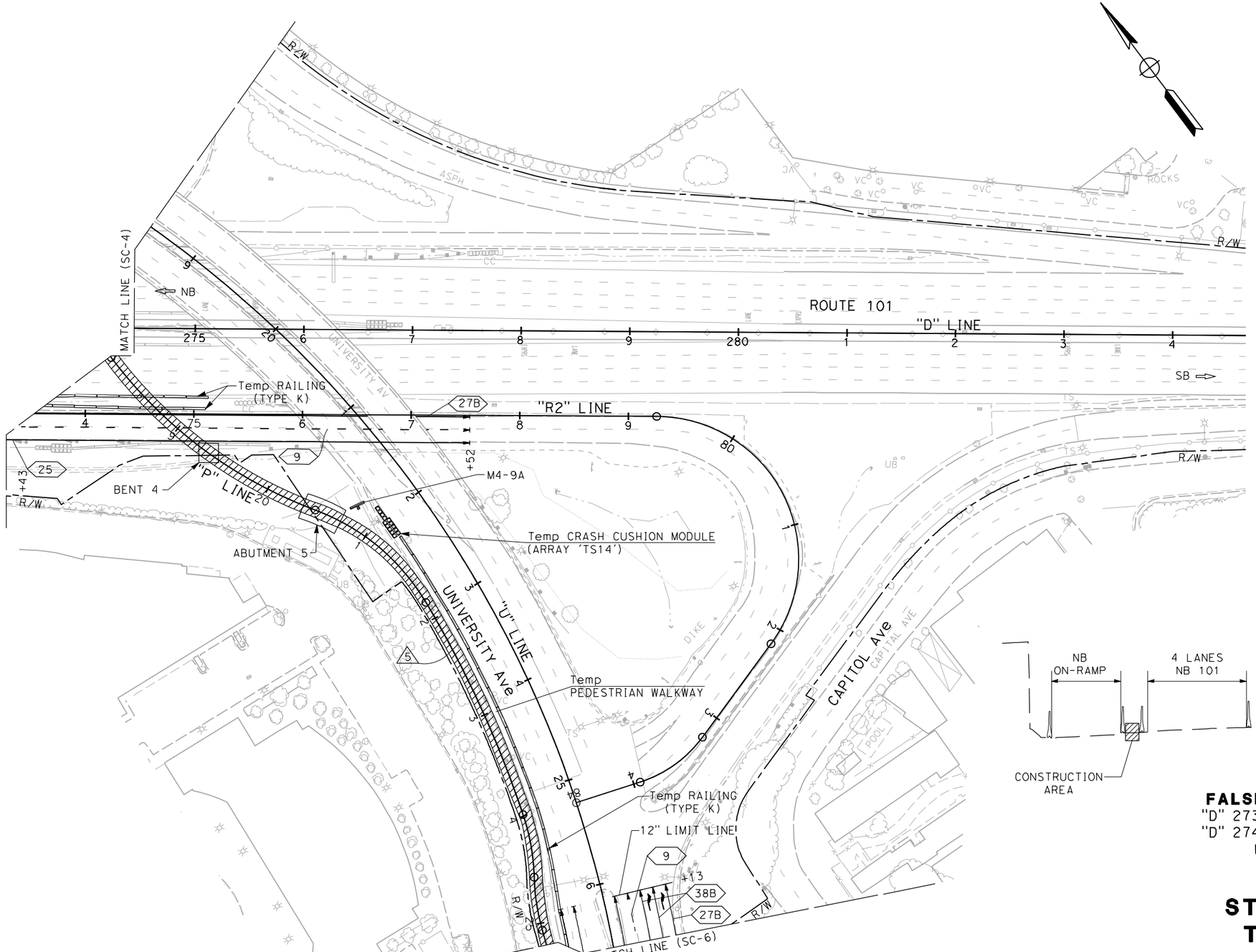

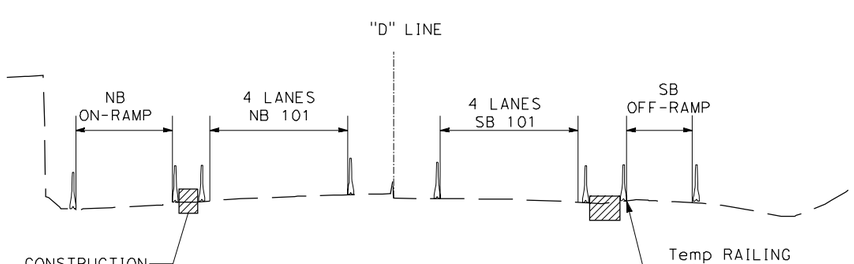

FALSEWORK BENT
"D" 273+50 TO 273+70
"D" 274+50 TO 274+70
NO SCALE

FOR NOTES AND LEGEND SEE SHEET SC-1

STAGE CONSTRUCTION AND TRAFFIC HANDLING PLAN
STAGE 2

SCALE 1" = 50'

APPROVED FOR STAGE CONSTRUCTION AND TRAFFIC HANDLING WORK ONLY

SC-5

CALCULATED-DESIGNED BY	JOSE CORONEL	REVISED BY	JC
CHECKED BY	DANIEL HO	DATE REVISED	9-15-22
CONSULTANT FUNCTIONAL SUPERVISOR	HOWARD MICHAEL		
STATE OF CALIFORNIA - DEPARTMENT OF TRANSPORTATION	Caltrans		

LAST REVISION 9-15-22 | DATE PLOTTED => 10/27/2022 | TIME PLOTTED => 10:30:56 AM

BORDER LAST REVISED 8/1/2016 | USERNAME => jose.coronel | DGN FILE => 04000007591ma005.dgn | RELATIVE BORDER SCALE IS IN INCHES 0 1 2 3 | UNIT 0703 | PROJECT NUMBER & PHASE 04000007591

NOTE:

FOR ACCURATE RIGHT OF WAY DATA, CONTACT
RIGHT OF WAY ENGINEERING AT THE DISTRICT OFFICE.

Dist	COUNTY	ROUTE	POST MILES TOTAL PROJECT	SHEET No.	TOTAL SHEETS
04	SM	101	0.8/1.1	52	136

9-15-22
REGISTERED CIVIL ENGINEER DATE

9-30-22
PLANS APPROVAL DATE

REGISTERED PROFESSIONAL ENGINEER
DANIEL HO
No. 50914
Exp. 9-30-23
CIVIL
STATE OF CALIFORNIA

THE STATE OF CALIFORNIA OR ITS OFFICERS OR AGENTS SHALL NOT BE RESPONSIBLE FOR THE ACCURACY OR COMPLETENESS OF SCANNED COPIES OF THIS PLAN SHEET.

AECOM
4 N. SECOND St
SUITE 675
SAN JOSE, CA 95113

CITY OF EAST PALO ALTO
1960 TATE STREET
EAST PALO ALTO, CA 94303

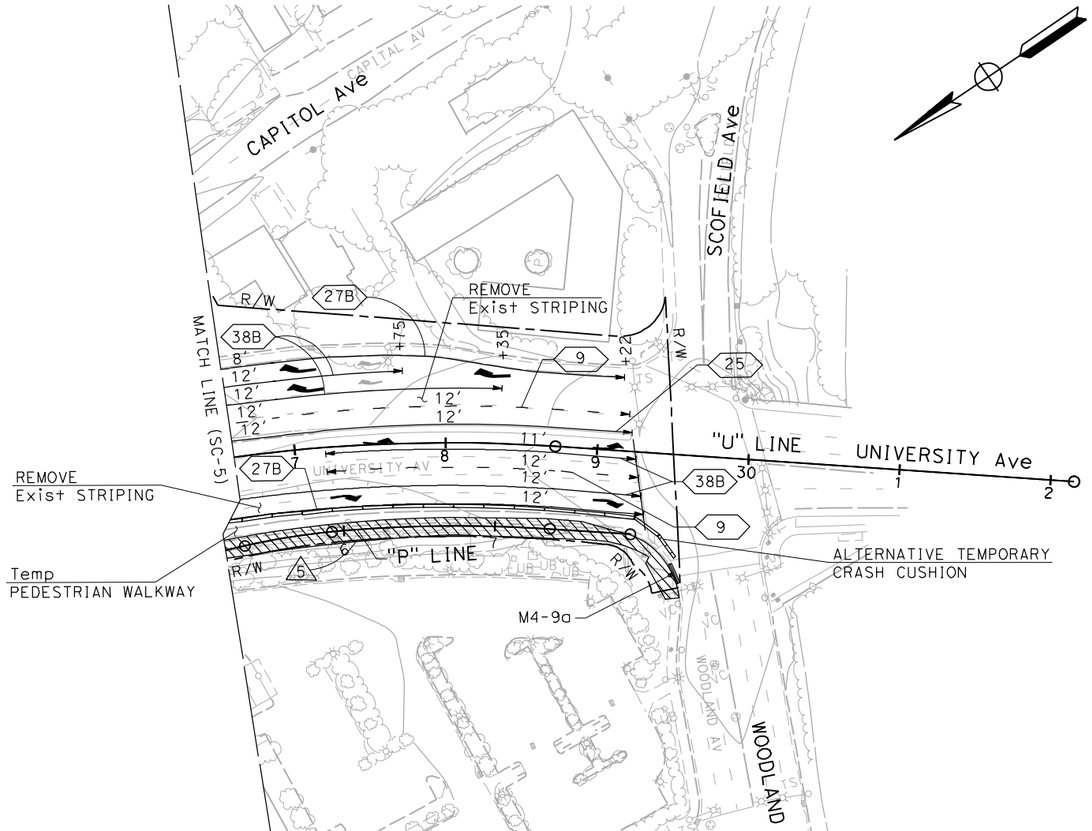

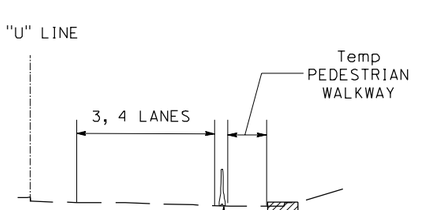

UNIVERSITY AVE

"D" 23+50 TO 27+90

NO SCALE

FOR NOTES AND LEGEND
SEE SHEET SC-1

STAGE CONSTRUCTION AND TRAFFIC HANDLING PLAN STAGE 2

SCALE 1" = 50'

SC-6

APPROVED FOR STAGE CONSTRUCTION AND TRAFFIC HANDLING WORK ONLY

REVISED BY	JC	
DATE REVISED	9-15-22	
CALCULATED-DESIGNED BY	JOSE CORONEL	
CHECKED BY	DANIEL HO	
CONSULTANT FUNCTIONAL SUPERVISOR	HOWARD MICHAEL	

STATE OF CALIFORNIA - DEPARTMENT OF TRANSPORTATION
Caltrans

LAST REVISION 9-15-22
DATE PLOTTED => 10/27/2022
TIME PLOTTED => 10:30:37 AM

BORDER LAST REVISED 8/1/2016 | USERNAME => jose.coronel | DGN FILE => 04000007591ma006.dgn | RELATIVE BORDER SCALE IS IN INCHES 0 1 2 3 | UNIT 0703 | PROJECT NUMBER & PHASE 04000007591

Dist	COUNTY	ROUTE	POST MILES TOTAL PROJECT	SHEET No.	TOTAL SHEETS
04	SM	101	0.8/1.1	53	136

REGISTERED CIVIL ENGINEER — DATE: 9-15-22

PLANS APPROVAL DATE: 9-30-22

REGISTERED PROFESSIONAL ENGINEER — DANIEL HO — No. 50914 — Exp. 9-30-23 — CIVIL — STATE OF CALIFORNIA

THE STATE OF CALIFORNIA OR ITS OFFICERS OR AGENTS SHALL NOT BE RESPONSIBLE FOR THE ACCURACY OR COMPLETENESS OF SCANNED COPIES OF THIS PLAN SHEET.

AECOM
4 N. SECOND St
SUITE 675
SAN JOSE, CA 95113

CITY OF EAST PALO ALTO
1960 TATE STREET
EAST PALO ALTO, CA 94303

NOTE:

FOR ACCURATE RIGHT OF WAY DATA, CONTACT RIGHT OF WAY ENGINEERING AT THE DISTRICT OFFICE.

STAGE 3 CONSTRUCTION:

7 RESTORE PERMANENT PAVEMENT DELINEATION ON ROUTE 101 AND RAMPS.

8 REMOVE SIDEWALK ON UNIVERSITY BETWEEN NB LOOP ON-RAMP AND OVERCROSSING.

9 CONSTRUCT CURB ON SB UNIVERSITY AVE BETWEEN OVERCROSSING AND WOODLAND AVE.

STAGE 3 TRAFFIC:

[8] SHIFT TRAFFIC BACK TO PERMANENT CONFIGURATIONS ON ROUTE 101 AND RAMPS.

[9] OPEN POC AND CLASS 1 TRAIL TO TRAFFIC.

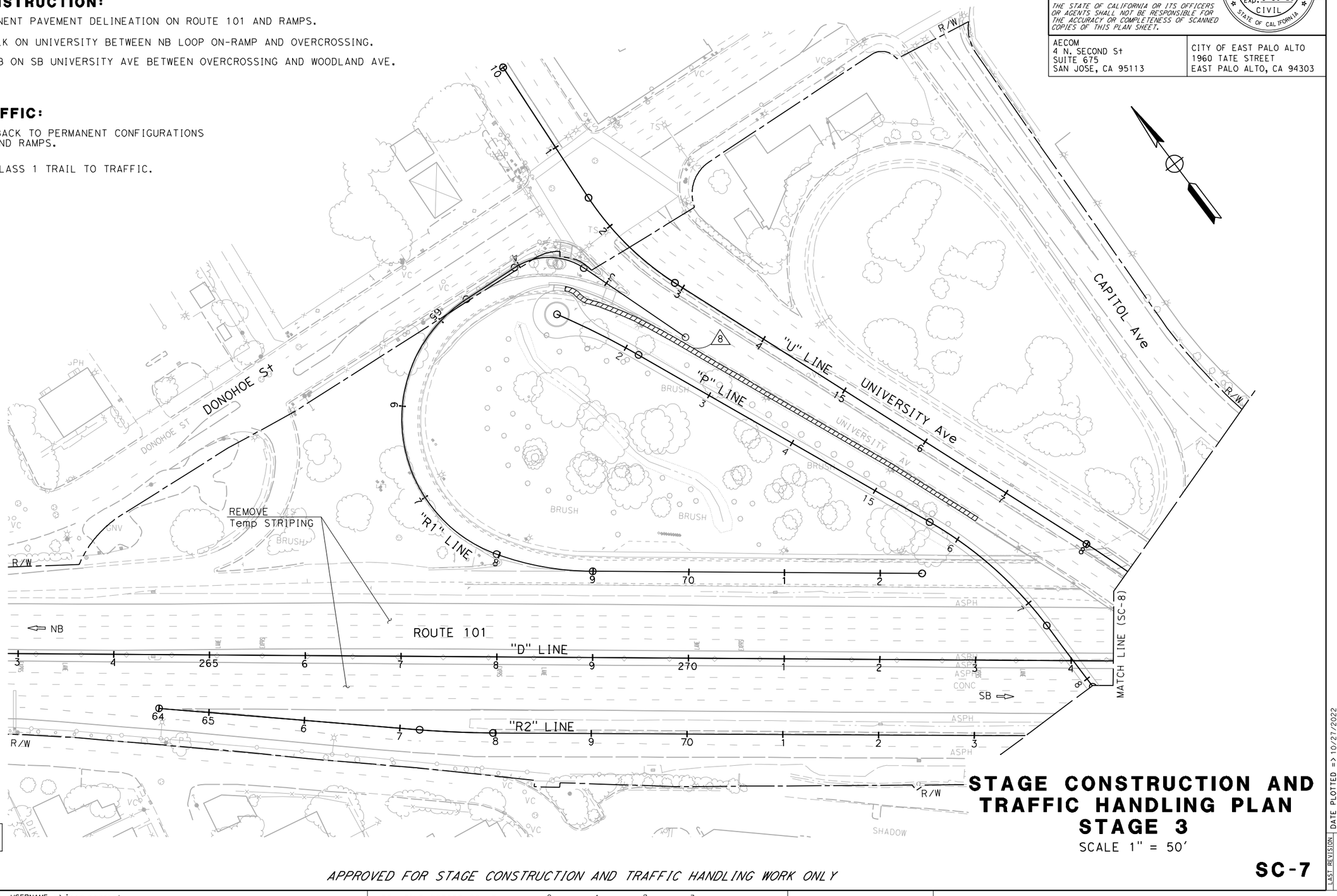

FOR NOTES AND LEGEND SEE SHEET SC-1

STAGE CONSTRUCTION AND TRAFFIC HANDLING PLAN STAGE 3

SCALE 1" = 50'

APPROVED FOR STAGE CONSTRUCTION AND TRAFFIC HANDLING WORK ONLY

SC-7

CALCULATED-DESIGNED BY	REVISED BY	DATE REVISED
CHECKED BY	JOSE CORONEL	9-15-22
	DANIEL HO	

CONSULTANT FUNCTIONAL SUPERVISOR: HOWARD MICHAEL

STATE OF CALIFORNIA - DEPARTMENT OF TRANSPORTATION

Caltrans

LAST REVISION: DATE PLOTTED => 10/27/2022 TIME PLOTTED => 10:32:22 AM

BORDER LAST REVISED 8/1/2016 | USERNAME => jose.coronel DGN FILE => 04000007591ma007.dgn | RELATIVE BORDER SCALE IS IN INCHES 0 1 2 3 | UNIT 0703 | PROJECT NUMBER & PHASE 04000007591

NOTE:

FOR ACCURATE RIGHT OF WAY DATA, CONTACT
RIGHT OF WAY ENGINEERING AT THE DISTRICT OFFICE.

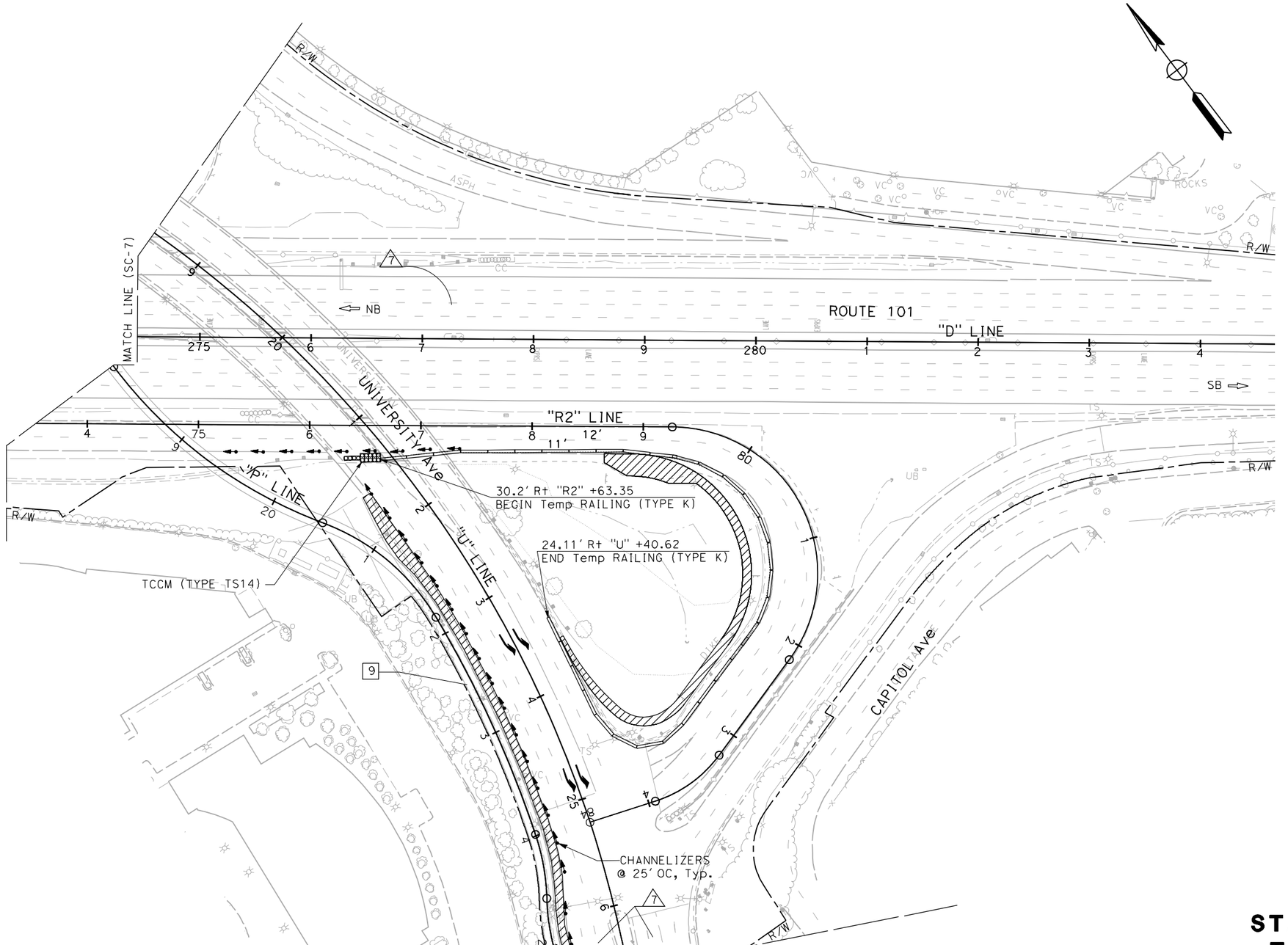

FOR NOTES AND LEGEND
SEE SHEET SC-1

Dist	COUNTY	ROUTE	POST MILES TOTAL PROJECT	SHEET No.	TOTAL SHEETS
04	SM	101	0.8/1.1	54	136

REGISTERED CIVIL ENGINEER — DATE: 9-15-22

PLANS APPROVAL DATE: 9-30-22

REGISTERED PROFESSIONAL ENGINEER — DANIEL HO — No. 50914 — Exp. 9-30-23 — CIVIL — STATE OF CALIFORNIA

THE STATE OF CALIFORNIA OR ITS OFFICERS OR AGENTS SHALL NOT BE RESPONSIBLE FOR THE ACCURACY OR COMPLETENESS OF SCANNED COPIES OF THIS PLAN SHEET.

AECOM
4 N. SECOND St
SUITE 675
SAN JOSE, CA 95113

CITY OF EAST PALO ALTO
1960 TATE STREET
EAST PALO ALTO, CA 94303

STAGE CONSTRUCTION AND TRAFFIC HANDLING PLAN STAGE 3

SCALE 1" = 50'

SC-8

APPROVED FOR STAGE CONSTRUCTION AND TRAFFIC HANDLING WORK ONLY

STATE OF CALIFORNIA - DEPARTMENT OF TRANSPORTATION
Caltrans

CONSULTANT FUNCTIONAL SUPERVISOR: HOWARD MICHAEL

CALCULATED-DESIGNED BY: JOSE CORONEL
CHECKED BY: DANIEL HO

REVISED BY: JC
DATE REVISED: 9-15-22

LAST REVISION — DATE PLOTTED => 10/27/2022
TIME PLOTTED => 10:32:38 AM

BORDER LAST REVISED 8/1/2016 | USERNAME => jose.coronel | DGN FILE => 04000007591ma008.dgn | RELATIVE BORDER SCALE IS IN INCHES 0 1 2 3 | UNIT 0703 | PROJECT NUMBER & PHASE 04000007591

Dist	COUNTY	ROUTE	POST MILES TOTAL PROJECT	SHEET No.	TOTAL SHEETS
04	SM	101	0.8/1.1	55	136

REGISTERED CIVIL ENGINEER 9-15-22 DATE

9-30-22
PLANS APPROVAL DATE

REGISTERED PROFESSIONAL ENGINEER DANIEL HO No. 50914 Exp. 9-30-23 CIVIL STATE OF CALIFORNIA

THE STATE OF CALIFORNIA OR ITS OFFICERS OR AGENTS SHALL NOT BE RESPONSIBLE FOR THE ACCURACY OR COMPLETENESS OF SCANNED COPIES OF THIS PLAN SHEET.

AECOM
4 N. SECOND St
SUITE 675
SAN JOSE, CA 95113

CITY OF EAST PALO ALTO
1960 TATE STREET
EAST PALO ALTO, CA 94303

NOTE:

FOR ACCURATE RIGHT OF WAY DATA, CONTACT RIGHT OF WAY ENGINEERING AT THE DISTRICT OFFICE.

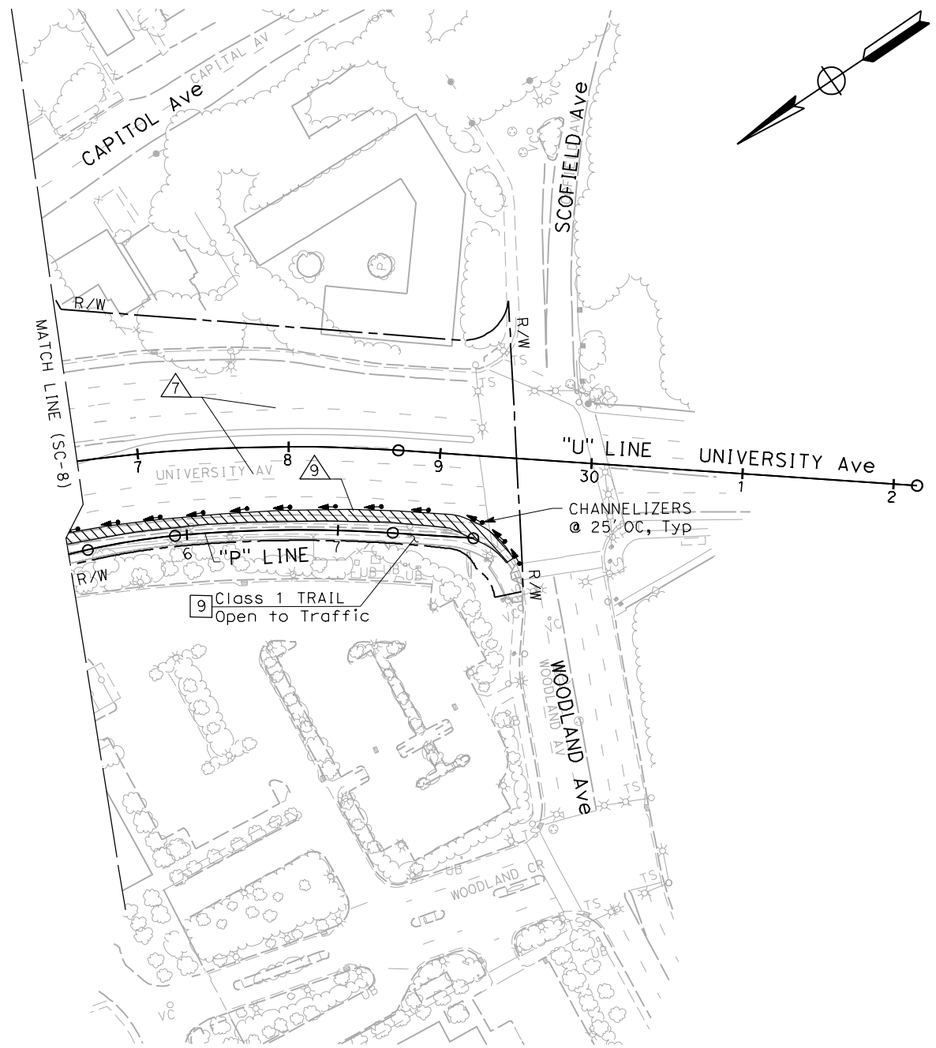

FOR NOTES AND LEGEND SEE SHEET SC-1

STAGE CONSTRUCTION AND TRAFFIC HANDLING PLAN STAGE 3

SCALE 1" = 50'

SC-9

APPROVED FOR STAGE CONSTRUCTION AND TRAFFIC HANDLING WORK ONLY

STATE OF CALIFORNIA - DEPARTMENT OF TRANSPORTATION
Caltrans

CONSULTANT FUNCTIONAL SUPERVISOR: HOWARD MICHAEL
CALCULATED-DESIGNED BY: JOSE CORONEL
CHECKED BY: DANIEL HO
REVISED BY: JC
DATE REVISED: 9-15-22

LAST REVISION 9-15-22
DATE PLOTTED => 10/27/2022
TIME PLOTTED => 10:34:26 AM

BORDER LAST REVISED 8/1/2016
USERNAME => jose.coronel
DGN FILE => 04000007591ma009.dgn
RELATIVE BORDER SCALE IS IN INCHES 0 1 2 3
UNIT 0703
PROJECT NUMBER & PHASE 04000007591

Dist	COUNTY	ROUTE	POST MILES TOTAL PROJECT	SHEET No.	TOTAL SHEETS
04	SM	101	0.8/1.1	56	136

9-15-22
REGISTERED CIVIL ENGINEER DATE

9-30-22
PLANS APPROVAL DATE

REGISTERED PROFESSIONAL ENGINEER
DANIEL HO
No. 50914
Exp. 9-30-23
CIVIL
STATE OF CALIFORNIA

THE STATE OF CALIFORNIA OR ITS OFFICERS OR AGENTS SHALL NOT BE RESPONSIBLE FOR THE ACCURACY OR COMPLETENESS OF SCANNED COPIES OF THIS PLAN SHEET.

AECOM
4 N. SECOND St
SUITE 675
SAN JOSE, CA 95113

CITY OF EAST PALO ALTO
1960 TATE STREET
EAST PALO ALTO, CA 94303

TEMPORARY PAVEMENT DELINEATION QUANTITIES

SHEET No.	LOCATION	DETAIL No.	PAINT TRAFFIC STRIPE (2-COAT)	PAVEMENT MARKER (RETRO-REFLECTIVE)	PAINT PAVEMENT MARKING (2 COAT)[N]			REMOVE THERMOPLASTIC PAVEMENT MARKING	REMOVE THERMOPLASTIC TRAFFIC STRIPE	REMOVE YELLOW THERMOPLASTIC TRAFFIC STRIPE (HAZARDOUS WASTE)	REMOVE PAVEMENT MARKER
			LF	EA	DESCRIPTION	EA[N]	SQFT	SQFT	LF	LF	EA
SC-1, SC-2	NB ROUTE 101	27B	1320								
		12A	2640	58					1320		58
		25	1320	29						1320	29
		42	1320	29					1320		29
					EXPRS LANE	2	54	108			
	SB ROUTE 101	27B	1162								
		12A	2324	56					1162		56
		25	1162	28						1162	29
		42	1162	28					1162		28
					EXPRES LANE	3	54	162			
SC-2, SC-3	SB UNIVERSITY Ave	9	320	8							
		10							320		8
		27B	320						320		
		37B							100		10
		38							420		28
		38B	520	46							
					TYPE III (L) ARROW	2	84	84			
					TYPE III (R) ARROW	2	84	84			
	NB UNIVERSITY Ave	9	320	8							
		10							320		8
		27B							320		
		37B		12					200		12
		38							200		6
		38B	345	31							
					TYPE III (R) ARROW	4	168	168			
SC-4-SC-6	SB ROUTE 101 OFF RAMP	9	1140	26					1140		26
		25	1627	69						1627	69
		27B	1588						1588		
	SB UNIVERSITY Ave	9	206	6					320		8
		27B	310						320		
		38B	515	46					520		46
					TYPE III (R) ARROW	2	84	84			
					TYPE III (L) ARROW	2	84	84			
	NB UNIVERSITY Ave	9	312	7					320		8
		25	305	8						100	3
		27B	320						320		
		38B	265	26					345		31
					TYPE III (R) ARROW	5	210	168			
TOTAL			20,823	521			822	942	12,037	4209	492

[N] = NOT A SEPARATE PAY ITEM, FOR INFORMATION ONLY

STAGE CONSTRUCTION AND TRAFFIC HANDLING QUANTITIES

APPROVED FOR STAGE CONSTRUCTION AND TRAFFIC HANDLING WORK ONLY

SCQ-1

REVISED BY	DATE REVISED
JC	9-15-22

CALCULATED-DESIGNED BY: JOSE CORONEL
CHECKED BY: DANIEL HO
CONSULTANT FUNCTIONAL SUPERVISOR: HOWARD MICHAEL
STATE OF CALIFORNIA - DEPARTMENT OF TRANSPORTATION

LAST REVISION 9-15-22
DATE PLOTTED => 10/27/2022
TIME PLOTTED => 10:34:07 AM

Dist	COUNTY	ROUTE	POST MILES TOTAL PROJECT	SHEET No.	TOTAL SHEETS
04	SM	101	0.8/1.1	57	136

REGISTERED CIVIL ENGINEER — DATE 9-15-22

PLANS APPROVAL DATE 9-30-22

REGISTERED PROFESSIONAL ENGINEER — DANIEL HO — No. 50914 — Exp. 9-30-23 — CIVIL — STATE OF CALIFORNIA

THE STATE OF CALIFORNIA OR ITS OFFICERS OR AGENTS SHALL NOT BE RESPONSIBLE FOR THE ACCURACY OR COMPLETENESS OF SCANNED COPIES OF THIS PLAN SHEET.

AECOM
4 N. SECOND St
SUITE 675
SAN JOSE, CA 95113

CITY OF EAST PALO ALTO
1960 TATE STREET
EAST PALO ALTO, CA 94303

TEMPORARY RAILING (TYPE K)

STATION	TEMPORARY RAILING (TYPE K)
	LF
STAGE 1	
"D" 271+34 R† TO "D" 275+00 R†	400
"R1" 71+80 L† TO "D" 274+00 L†	220
"D" 272+80 L† TO "D" 276+60 L†	380
"R2" 74+00 R† TO "R2" 75+82 R†	182
STAGE 2	
"D" 272+90 L† TO "D" 274+40 L†	200
"D" 272+80 R† TO "D" 275+20 R†	480
"U" 21+20 R† TO "U" 29+20 R†	700
STAGE 3	
"R2" 76+63 R† TO "U" 23+40 L†	768
TOTAL	3330

ALTERNATIVE TEMPORARY CRASH CUSHION

SHEET No.	STATION	EA
SC-6	"U" 29+45 R†	1
	TOTAL	1

TEMPORARY CRASH CUSHION MODULE

SHEET No.	STATION	ARRAY	EA
SC-1	"D" 271+00 R†	TS-14	14
SC-1	"D" 274+00 L†	TS-14	14
SC-2	"D" 276+60 L†	TS-14	14
SC-2	"D" 273+70 R†	TS-14	14
SC-4	"D" 272+60 R†	TS-14	14
SC-5	"U" 21+00 R†	TS-14	14
SC-8	"R2" 76+31 R†	TS-14	14
		TOTAL	98

CHANNELIZER

SHEET No.	LOCATION	EA
SC-1	"D" 274+16 L† TO "D" 274+80 L†	6
	"R1" 62+43.56 L† TO 66+00 L†	20
	R2" 72+28 R† TO "R2" 73+66 R†	6
SC-2	"D" 275+00 L† TO "D" 279+00 L†	16
SC-3	"U" 26+00 TO "U" 29+30	28
SC-4	"D" 271+00 R† TO "D" 272+80 R†	9
SC-8	"R2" 75+23 R† TO "R2" 77+34 R†	9
SC-8 & SC-9	"U" 20+40 R† TO "U" 29+30 R†	31
	TOTAL	125

STAGE CONSTRUCTION AND TRAFFIC HANDLING QUANTITES

SCQ-2

APPROVED FOR STAGE CONSTRUCTION AND TRAFFIC HANDLING WORK ONLY

REVISED BY	JC
DATE REVISED	9-15-22
JOSE CORONEL	
DANIEL HO	
CALCULATED-DESIGNED BY	
CHECKED BY	
CONSULTANT FUNCTIONAL SUPERVISOR	HOWARD MICHAEL

STATE OF CALIFORNIA - DEPARTMENT OF TRANSPORTATION — Caltrans

LAST REVISION 9-15-22
DATE PLOTTED => 10/27/2022
TIME PLOTTED => 10:35:32 AM

BORDER LAST REVISED 8/1/2016
USERNAME => jose.coronel
DGN FILE => 04000007591mc002.dgn
RELATIVE BORDER SCALE IS IN INCHES 0 1 2 3
UNIT 0703
PROJECT NUMBER & PHASE 04000007591

Dist	COUNTY	ROUTE	POST MILES TOTAL PROJECT	SHEET No.	TOTAL SHEETS
04	SM	101	0.8/1.1	58	136

REGISTERED CIVIL ENGINEER — 9-15-22 DATE

PLANS APPROVAL DATE — 9-30-22

REGISTERED PROFESSIONAL ENGINEER — DANIEL HO No. 50914 Exp. 9-30-23 CIVIL — STATE OF CALIFORNIA

THE STATE OF CALIFORNIA OR ITS OFFICERS OR AGENTS SHALL NOT BE RESPONSIBLE FOR THE ACCURACY OR COMPLETENESS OF SCANNED COPIES OF THIS PLAN SHEET.

AECOM
4 N. SECOND St
SUITE 675
SAN JOSE, CA 95113

CITY OF EAST PALO ALTO
1960 TATE STREET
EAST PALO ALTO, CA 94303

LEGEND:

- No. — STANDARD PAVEMENT DELINEATION DETAIL No.
- BEGIN/END OF TRAFFIC STRIPE DETAIL
- CHANGE OF TRAFFIC STRIPE DETAIL
- L_F DELINEATOR (CLASS 1) WITH TYPE DESIGNATION
- L_G DELINEATOR (CLASS 1) WITH TYPE DESIGNATION
- OBJECT MARKER
- TYPE III (R OR L) ARROW
- BIKE LANE ARROW
- SHARED ROADWAY BICYCLE MARKING
- DIRECTION OF TRAFFIC
- TYPE I ARROW
- "EXPRESS LANE" PAVEMENT MARKINGS

NOTES:

1. FOR ACCURATE RIGHT OF WAY DATA, CONTACT RIGHT OF WAY ENGINEERING AT THE DISTRICT OFFICE.
2. ALL STRIPES AND PAVEMENT MARKINGS ARE TO BE THERMOPLASTIC, EXCEPT FOR THOSE MARKED PAINT.
3. CONTRACTOR SHALL REMOVE ANY EXISTING CONFLICTING STRIPING, PAVEMENT MARKERS, MARKINGS, AND DELINEATORS.
4. ALL LIMIT LINES AND CROSSWALKS SHALL BE 1 FT SOLID WHITE LINES.
5. ALL FINAL STRIPING WILL BE PLACED AT THE END OF THE PROJECT.

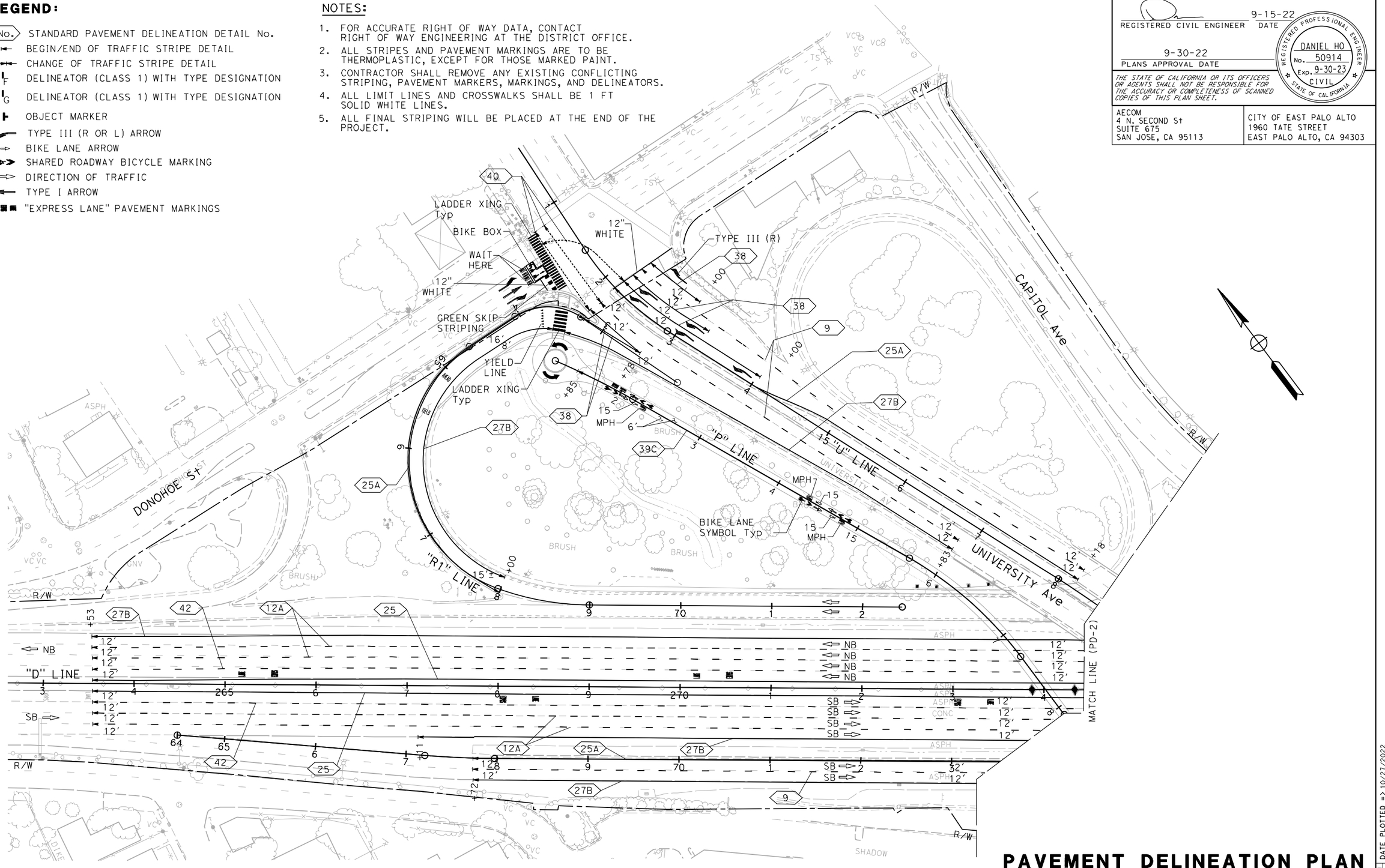

PAVEMENT DELINEATION PLAN

SCALE 1" = 50'

PD-1

APPROVED FOR PAVEMENT DELINEATION WORK ONLY

STATE OF CALIFORNIA - DEPARTMENT OF TRANSPORTATION — Caltrans

CONSULTANT FUNCTIONAL SUPERVISOR: HOWARD MICHAEL

CALCULATED-DESIGNED BY	CHECKED BY	REVISED BY	DATE REVISED
JOSE CORONEL	DANIEL HO	JC	9-15-22

LAST REVISION 9-15-22
DATE PLOTTED => 10/27/2022
TIME PLOTTED => 10:40:04 AM

BORDER LAST REVISED 8/1/2016 | USERNAME => jose.coronel | DGN FILE => 040000075911na001.dgn | RELATIVE BORDER SCALE IS IN INCHES 0 1 2 3 | UNIT 0703 | PROJECT NUMBER & PHASE 04000007591

Dist	COUNTY	ROUTE	POST MILES TOTAL PROJECT	SHEET No.	TOTAL SHEETS
04	SM	101	0.8/1.1	59	136

REGISTERED CIVIL ENGINEER — DATE 9-15-22

PLANS APPROVAL DATE 9-30-22

REGISTERED PROFESSIONAL ENGINEER — DANIEL HO — No. 50914 — Exp. 9-30-23 — CIVIL — STATE OF CALIFORNIA

THE STATE OF CALIFORNIA OR ITS OFFICERS OR AGENTS SHALL NOT BE RESPONSIBLE FOR THE ACCURACY OR COMPLETENESS OF SCANNED COPIES OF THIS PLAN SHEET.

AECOM
4 N. SECOND St
SUITE 675
SAN JOSE, CA 95113

CITY OF EAST PALO ALTO
1960 TATE STREET
EAST PALO ALTO, CA 94303

NOTE:

FOR ACCURATE RIGHT OF WAY DATA, CONTACT
RIGHT OF WAY ENGINEERING AT THE DISTRICT OFFICE.

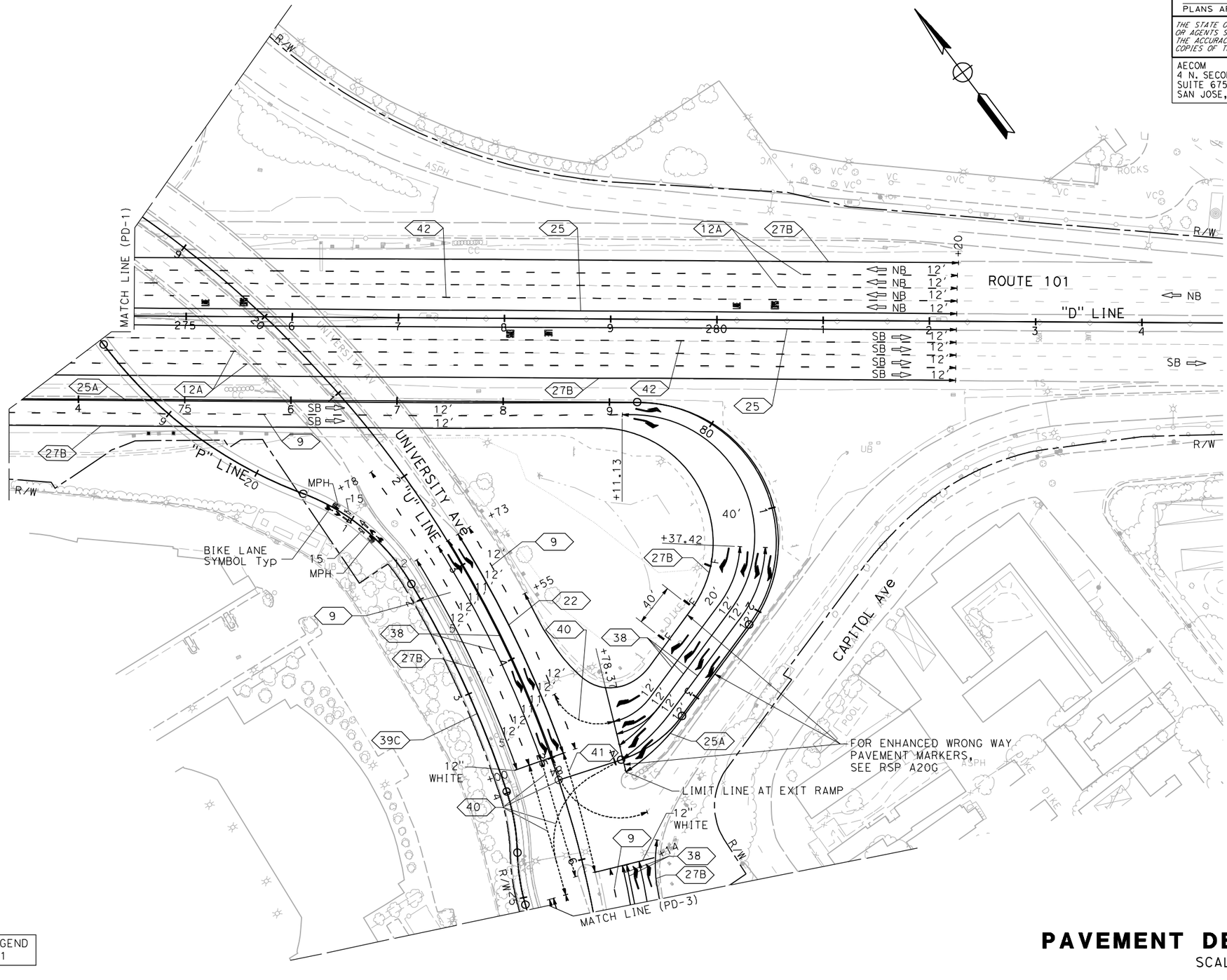

FOR NOTES AND LEGEND
SEE SHEET PD-1

PAVEMENT DELINEATION PLAN

SCALE 1" = 50'

PD-2

APPROVED FOR PAVEMENT DELINEATION WORK ONLY

STATE OF CALIFORNIA - DEPARTMENT OF TRANSPORTATION

Caltrans

CONSULTANT FUNCTIONAL SUPERVISOR: HOWARD MICHAEL

CALCULATED-DESIGNED BY: JOSE CORONEL

CHECKED BY: DANIEL HO

REVISED BY: JC — DATE REVISED: 9-15-22

LAST REVISION — DATE PLOTTED => 10/27/2022
TIME PLOTTED => 10:39:50 AM

BORDER LAST REVISED 8/1/2016 | USERNAME => jose.coronel | DGN FILE => 04000007591na002.dgn | RELATIVE BORDER SCALE IS IN INCHES 0 1 2 3 | UNIT 0703 | PROJECT NUMBER & PHASE 04000007591

Dist	COUNTY	ROUTE	POST MILES TOTAL PROJECT	SHEET No.	TOTAL SHEETS
04	SM	101	0.8/1.1	60	136

REGISTERED CIVIL ENGINEER — DATE 9-15-22

PLANS APPROVAL DATE 9-30-22

REGISTERED PROFESSIONAL ENGINEER — DANIEL HO No. 50914 Exp. 9-30-23 CIVIL — STATE OF CALIFORNIA

THE STATE OF CALIFORNIA OR ITS OFFICERS OR AGENTS SHALL NOT BE RESPONSIBLE FOR THE ACCURACY OR COMPLETENESS OF SCANNED COPIES OF THIS PLAN SHEET.

AECOM
4 N. SECOND St
SUITE 675
SAN JOSE, CA 95113

CITY OF EAST PALO ALTO
1960 TATE STREET
EAST PALO ALTO, CA 94303

NOTE:

FOR ACCURATE RIGHT OF WAY DATA, CONTACT RIGHT OF WAY ENGINEERING AT THE DISTRICT OFFICE.

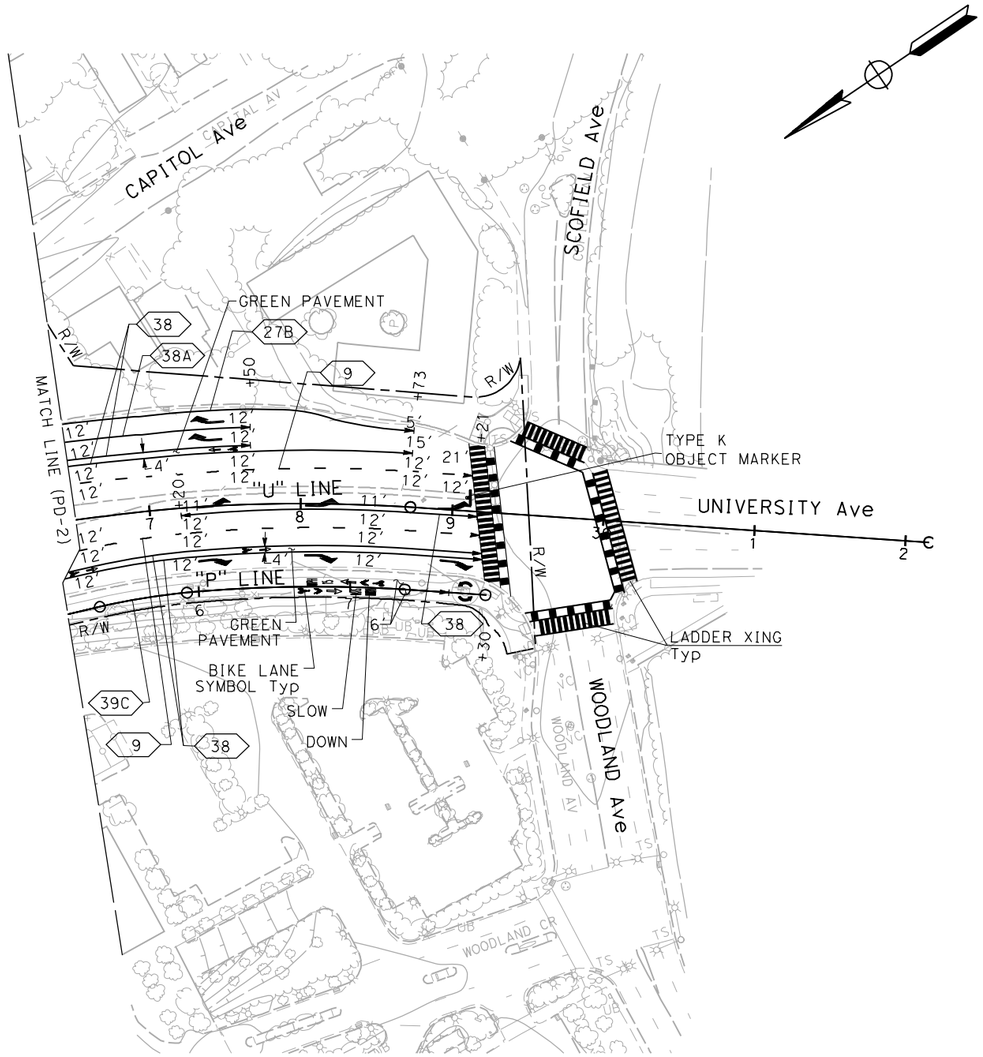

FOR NOTES AND LEGEND SEE SHEET PD-1

PAVEMENT DELINEATION PLAN

SCALE 1" = 50'

PD-3

APPROVED FOR PAVEMENT DELINEATION WORK ONLY

STATE OF CALIFORNIA - DEPARTMENT OF TRANSPORTATION	CONSULTANT FUNCTIONAL SUPERVISOR: HOWARD MICHAEL	CALCULATED-DESIGNED BY: JOSE CORONEL
		CHECKED BY: DANIEL HO
		REVISED BY: JC
		DATE REVISED: 9-15-22

LAST REVISION 9-15-22
DATE PLOTTED => 10/27/2022
TIME PLOTTED => 10:42:13 AM

BORDER LAST REVISED 8/1/2016 | USERNAME => jose.coronel | DGN FILE => 04000007591na003.dgn | RELATIVE BORDER SCALE IS IN INCHES 0 1 2 3 | UNIT 0703 | PROJECT NUMBER & PHASE 04000007591

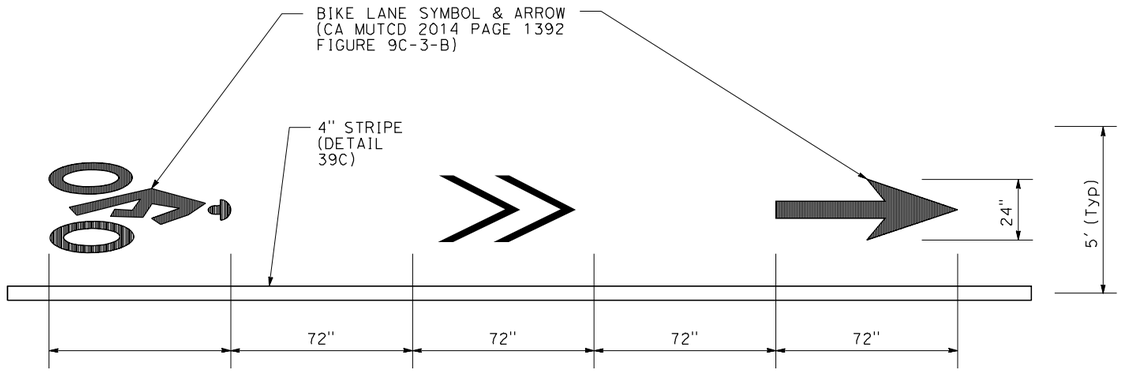

NOTES:
1. LONGITUDINAL SPACING MEASURED FROM THE BASE OF EACH MARKING.
2. FOR LONG BLOCKS, LOCATE A MARKING EVERY 250'.
3. DO NOT LOCATE MARKINGS ALONG DETAIL 39A BIKE LANE SKIP STRIPES ON INTERSECTION APPROACHS.

BIKE LANE SYMBOL, ARROW, AND STRIPING FOR CLASS I PATH

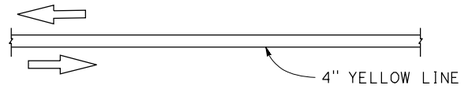

DETAIL 39C

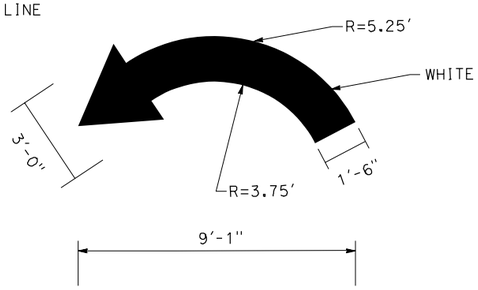

SMALL LANDING ARROW DETAIL

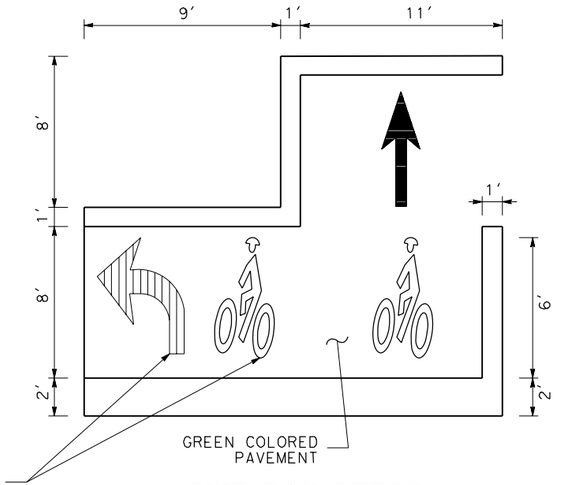

BIKE BOX DETAIL

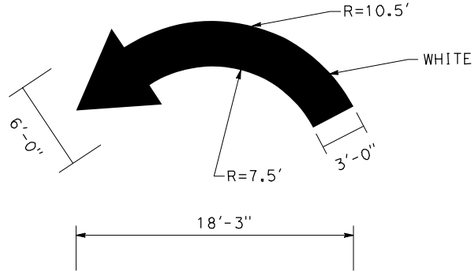

LARGE LANDING ARROW DETAIL

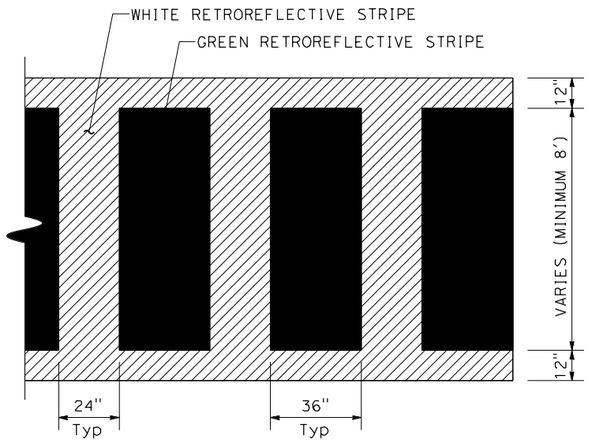

NOTE:
THIS DETAIL SHOULD BE USED AT LOCATIONS WHERE A BICYCLIST/ PEDESTRIAN PATH CROSSES AN INTERSECTING STREET. THIS DETAIL MAY BE USED WHERE DRIVEWAYS CROSS A BICYCLIST/PEDESTRIAN PATH.

LADDER CROSSWALK FOR BICYCLIST/PEDESTRIAN PATHS

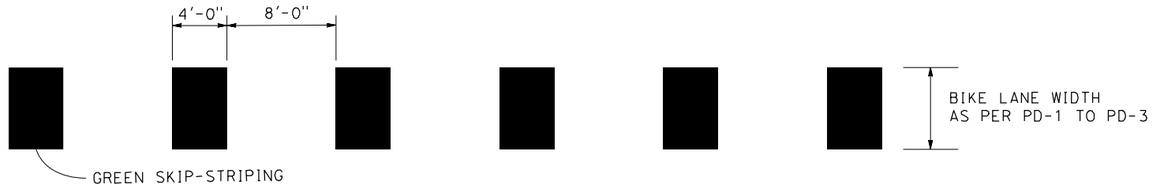

GREEN SKIP-STRIPING DETAIL

PAVEMENT DELINEATION DETAILS

NO SCALE

PDD-1

APPROVED FOR PAVEMENT DELINEATION WORK ONLY

Dist	COUNTY	ROUTE	POST MILES TOTAL PROJECT	SHEET No.	TOTAL SHEETS
04	SM	101	0.8/1.1	61	136

REGISTERED CIVIL ENGINEER — DATE 9-15-22

PLANS APPROVAL DATE 9-30-22

REGISTERED PROFESSIONAL ENGINEER — DANIEL HO No. 50914 Exp. 9-30-23 CIVIL — STATE OF CALIFORNIA

THE STATE OF CALIFORNIA OR ITS OFFICERS OR AGENTS SHALL NOT BE RESPONSIBLE FOR THE ACCURACY OR COMPLETENESS OF SCANNED COPIES OF THIS PLAN SHEET.

AECOM
4 N. SECOND St
SUITE 675
SAN JOSE, CA 95113

CITY OF EAST PALO ALTO
1960 TATE STREET
EAST PALO ALTO, CA 94303

REVISED BY	DATE REVISED
JC	9-15-22

CALCULATED-DESIGNED BY: ELIE ABI-JAOUDE
CHECKED BY: NELSON HOM
CONSULTANT FUNCTIONAL SUPERVISOR: HOWARD MICHAEL
STATE OF CALIFORNIA - DEPARTMENT OF TRANSPORTATION

LAST REVISION 9-15-22
DATE PLOTTED => 10/27/2022
TIME PLOTTED => 10:41:32 AM

BORDER LAST REVISED 8/1/2016
USERNAME => jose.coronel
DGN FILE => 04000007591nb001.dgn
RELATIVE BORDER SCALE IS IN INCHES 0 1 2 3
UNIT 0703
PROJECT NUMBER & PHASE 04000007591

Dist	COUNTY	ROUTE	POST MILES TOTAL PROJECT	SHEET No.	TOTAL SHEETS
04	SM	101	0.8/1.1	62	136

9-15-22
REGISTERED CIVIL ENGINEER DATE

9-30-22
PLANS APPROVAL DATE

REGISTERED PROFESSIONAL ENGINEER
DANIEL HO
No. 50914
Exp. 9-30-23
CIVIL
STATE OF CALIFORNIA

THE STATE OF CALIFORNIA OR ITS OFFICERS OR AGENTS SHALL NOT BE RESPONSIBLE FOR THE ACCURACY OR COMPLETENESS OF SCANNED COPIES OF THIS PLAN SHEET.

AECOM
4 N. SECOND St
SUITE 675
SAN JOSE, CA 95113

CITY OF EAST PALO ALTO
1960 TATE STREET
EAST PALO ALTO, CA 94303

PAVEMENT DELINEATION QUANTITIES

SHEET No.	STATION LIMITS	SIDE	DETAIL No. OR PAVEMENT MARKING	LENGTH [N]	PAVEMENT MARKER					THERMOPLASTIC TRAFFIC STRIPE (ENHANCED WET NIGHT VISIBILITY)									THERMOPLASTIC PAVEMENT MARKING (ENHANCED WET NIGHT VISIBILITY)		BIKE LANE MARKING	OBJECT MARKER (TYPE K)
					RETRO-REFLECTIVE					9	12A	22,25, 25A	27B	38, 38B	39C	40	41	42				
					TYPE C	TYPE D	TYPE G	TYPE R	TYPE RY	6" WHITE (BROKEN 17-7)	6" WHITE (BROKEN 18-12)	6" YELLOW SOLID	6" WHITE SOLID	8" WHITE SOLID	4" YELLOW (SOLID)	6" WHITE (BROKEN 6-1)	6" YELLOW (BROKEN 6-1)	8" WHITE (BROKEN 18-12)			GREEN PAVEMENT	
				LF	EA					LF									EA [N]	SQFT	SQFT	EA
PD-1 PD-2	NB Route 101 "D" 263+53 TO "D" 282+20	Lt	12A	3776	80						3776											
		Lt	25	1872					39			1872										
		Lt	27B	1872									1872									
		Lt	EXPRS LANE																4	216		
		Lt	42	1872	130													1872				
	SB Route 101 "D" 263+53 TO "D" 282+20	Rt	12A	3744	80						3744											
		Rt	25	1899					80			1899										
		Rt	27B	1270									1270									
		Rt	EXPRS LANE																4	216		
		Rt	42	1899	130													1899				
	SB Route 101 OFF-RAMP "D" 267+72 TO "D" 280+60	Rt	9	1140			25			1140												
		Rt	25A	1627					96			1627										
		Rt	27B	1588				42					1588									
	NB Route 101 OFF-RAMP "R1" 68+00 TO "U" 16+83	Rt	25A	486					22			486										
		Lt	27B	884									884									
		Rt	38B	60	3									60								
		Lt / Rt	CROSSWALK																	240		
		Lt	YIELD LINE																1	24		
		Lt	YIELD																	24		
		Lt	AHEAD																	31		
PD-1	SB UNIVERSITY Ave "U" 11+15 TO "U" 16+83	Rt	9	472			11			472												
		Rt	38	144			8							144								
		Rt	CROSSWALK																	800	60	
		Rt	40	211												211						
		Rt	LIMIT LINE	15																15		
		Rt	TYPE III (L) ARROW																	42		
		Rt	TYPE III (R) ARROW																	42		
		Rt	TYPE I ARROW																	31		
		Rt	WAIT MARKING																2	38		
		Rt	HERE MARKING																2	52		
		Rt	BIKE BOX																	108	250	
	NB UNIVERSITY Ave "U" 12+15 TO "U" 18+18	Lt	9	594			14			594												
		Lt	25A	590					26			590										
		Lt	38	355			16							355								
		Lt	LIMIT LINE	80																80		
		Lt	TYPE III (L) ARROW																5	210		
		Lt	TYPE III (R) ARROW																1	42		
		Lt/Rt	40	108												108						
PD-2	SB UNIVERSITY Ave "U" 21+78 TO "U" 26+30	Rt	9	315			8			315												
		Rt	27B	220									220									
		Lt/Rt	38	452			21							452								
		Rt	40	491												491						
		Rt	41	116													116					
		Rt	LIMIT LINE	59																59		
		Rt	TYPE III (L) ARROW																6	252		
	NB UNIVERSITY Ave "U" 22+73 TO "U" 25+00	Lt	9	232			7			232												
		Lt	22	230		22						460										
PD-3	SB UNIVERSITY Ave "U" 26+14 TO "U" 30+33	Rt	9	300			8			300												
		Rt	38	765			33							765								
		Rt	CROSSWALK																	1350	385	1
		Rt	TYPE III (L) ARROW																3	126		
		Rt	TYPE III (R) ARROW																3	126		
		Rt	BICYCLE/ARROW MARKING																2	21	577	
	SHEET TOTAL OF PDQ-1				423	22	151	42	263	3053	7520	6934	5834	1776	0	810	116	3771		4145	1272	1

[N] - NOT A SEPARATE BID ITEM.

PAVEMENT DELINEATION QUANTITIES

PDQ-1

REVISED BY	DATE REVISED
JC	9-15-22

CALCULATED-DESIGNED BY: JOSE CORONEL
CHECKED BY: DANIEL HO
CONSULTANT FUNCTIONAL SUPERVISOR: HOWARD MICHAEL
STATE OF CALIFORNIA - DEPARTMENT OF TRANSPORTATION
Gatzans

LAST REVISION 9-15-22
DATE PLOTTED => 10/27/2022
TIME PLOTTED => 10:42:29 AM

Dist	COUNTY	ROUTE	POST MILES TOTAL PROJECT	SHEET No.	TOTAL SHEETS
04	SM	101	0.8/1.1	63	136

9-15-22
REGISTERED CIVIL ENGINEER DATE

9-30-22
PLANS APPROVAL DATE

REGISTERED PROFESSIONAL ENGINEER
DANIEL HO
No. 50914
Exp. 9-30-23
CIVIL
STATE OF CALIFORNIA

THE STATE OF CALIFORNIA OR ITS OFFICERS OR AGENTS SHALL NOT BE RESPONSIBLE FOR THE ACCURACY OR COMPLETENESS OF SCANNED COPIES OF THIS PLAN SHEET.

AECOM
4 N. SECOND St
SUITE 675
SAN JOSE, CA 95113

CITY OF EAST PALO ALTO
1960 TATE STREET
EAST PALO ALTO, CA 94303

PAVEMENT DELINEATION QUANTITIES

SHEET No.	STATION LIMITS	SIDE	DETAIL No. OR PAVEMENT MARKING	LENGTH [N]	PAVEMENT MARKER RETRO-REFLECTIVE TYPE C	TYPE D	TYPE G	TYPE R	TYPE RY	THERMOPLASTIC TRAFFIC STRIPE (ENHANCED WET NIGHT VISIBILITY) 9 6" WHITE (BROKEN 17-7)	12A 6" WHITE (BROKEN 18-12)	22,25, 25A 6" YELLOW SOLID	27B 6" WHITE SOLID	38, 38B 8" WHITE SOLID	39C 4" YELLOW (SOLID)	40 6" WHITE (BROKEN 6-1)	41 6" YELLOW (BROKEN 6-1)	42 8" WHITE (BROKEN 18-12)	THERMOPLASTIC PAVEMENT MARKING (ENHANCED WET NIGHT VISIBILITY) EA [N]	SQFT	BIKE LANE MARKING GREEN PAVEMENT	OBJECT MARKER (TYPE K)
				LF	EA					LF		LF	LF	LF	LF	LF	LF	LF			SQFT	EA
PD-2	SB Route 101 OFF-RAMP "R2" 78+60 TO "R2" 84+00	R†	38	927			42							927								
		R†	40	68												68						
		L†/R†	LIMIT LINE AT EXIT RAMP					66														
		R†	TYPE III (L) ARROW																1	66		
		R†	TYPE III (R) ARROW																1	42		
		R†	TYPE III (L) ARROW																1	42		
		R†	TYPE III (R) ARROW																2	84		
		R†	TYPE III (L) ARROW																2	84		
		R†	TYPE III (R) ARROW																2	84		
		R†	TYPE III (L) ARROW																2	84		
		R†	TYPE III (R) ARROW																2	84		
		R†	TYPE III (L) ARROW																2	84		
		R†	TYPE III (R) ARROW																2	84		
PD-2 PD-3	NB UNIVERSITY Ave "U" 26+10 TO "U"30+00	L†	9	300			8			300												
		L†	27B	290									290									
		L†	38	425			19							425								
		L†	38A	162										162								
		L†	CROSSWALK																1	1400	345	
		L†	TYPE III (R) ARROW																4	168		
		L†	LIMIT LINE	58															1	58		
		L†	BICYCLE/ARROW MARKING																2	21	635	
PD-1- PD-3	CLASS 1 FACILITY "P" 11+20 TO "P"27+80		39C	1,660											1660							
		L†/R†	SHARED PED/BICYCLE MARKING																8	84		
		L†/R†	SLOW DOWN/15 MPH MARKING																4	40		
		L†/R†	LARGE ARROWS																2	120		
		L†/R†	SMALL ARROWS																2	30		
			SHEET TOTAL OF PDQ-1		423	22	151	42	263	3053	7520	6934	5834	1776	0	810	116	3771		4145	1272	1
			SHEET TOTAL OF PDQ-2		0	0	69	66	0	300	0	0	290	1514	1660	68	0	0		2575	980	0
			GRAND TOTAL		423	22	220	108	263	3353	7520	6934	6124	3290	1660	878	116	3771		6720	2252	1

[N] - NOT A SEPARATE BID ITEM.

PAVEMENT DELINEATION QUANTITIES PDQ-2

CALCULATED-DESIGNED BY: JOSE CORONEL
CHECKED BY: DANIEL HO
CONSULTANT FUNCTIONAL SUPERVISOR: HOWARD MICHAEL
REVISED BY: JC
DATE REVISED: 9-15-22
STATE OF CALIFORNIA - DEPARTMENT OF TRANSPORTATION
Caltrans

LAST REVISION 9-15-22
DATE PLOTTED => 10/27/2022
TIME PLOTTED => 10:43:21 AM

Dist	COUNTY	ROUTE	POST MILES TOTAL PROJECT	SHEET No.	TOTAL SHEETS
04	SM	101	0.8/1.1	64	136

REGISTERED CIVIL ENGINEER 9-15-22 DATE

9-30-22 PLANS APPROVAL DATE

REGISTERED PROFESSIONAL ENGINEER DANIEL HO No. 50914 Exp. 9-30-23 CIVIL STATE OF CALIFORNIA

THE STATE OF CALIFORNIA OR ITS OFFICERS OR AGENTS SHALL NOT BE RESPONSIBLE FOR THE ACCURACY OR COMPLETENESS OF SCANNED COPIES OF THIS PLAN SHEET.

AECOM
4 N. SECOND St
SUITE 675
SAN JOSE, CA 95113

CITY OF EAST PALO ALTO
1960 TATE STREET
EAST PALO ALTO, CA 94303

NOTES:

1. FOR ACCURATE RIGHT OF WAY DATA, CONTACT RIGHT OF WAY ENGINEERING AT THE DISTRICT OFFICE.
2. EXACT LOCATION AND POSITION OF ROADSIDE SIGNS SHALL BE DETERMINED BY THE ENGINEER.
3. ALL ROADSIDE SIGNS ARE TO BE MOUNTED ON S4S WOOD POSTS, UNLESS OTHERWISE INDICATED.
4. POST SIZE AND LENGTH GIVEN ARE APPROXIMATE, EXACT SIZE AND LENGTH TO BE DETERMINED BY THE ENGINEER.
5. FOR POST AND SIGN DETAILS NOT SHOWN, REFER TO STANDARD PLAN SHEETS RS1 THROUGH RS4, S89 AND S93 THROUGH S95.
6. ALL WORK MUST CONFORM TO THE 2010 EDITION OF THE STATE OF CALIFORNIA DEPARTMENT OF TRANSPORTATION (CALTRANS) STANDARD PLANS AND STANDARD SPECIFICATIONS, 2012 CALIFORNIA MUTCD, THE LATEST SIGN SPECIFICATIONS AND THE PROJECT SPECIAL PROVISIONS.

LEGEND:

- OR EXISTING ROADSIDE SIGN
- OR PROPOSED ROADSIDE SIGN
- (X) ROADSIDE SIGN NUMBER
- ● EXISTING SIGN TO REMAIN
- ▲ RELOCATE ROADSIDE SIGN
- ■ REMOVE ROADSIDE SIGN AND POST
- ● REMOVE ROADSIDE SIGN PANEL

ABBREVIATION:

FEBT FACING EAST BOUND TRAFFIC
FWBT FACING WEST BOUND TRAFFIC
SSBM STRAP AND SADDLE BRACKET METHOD

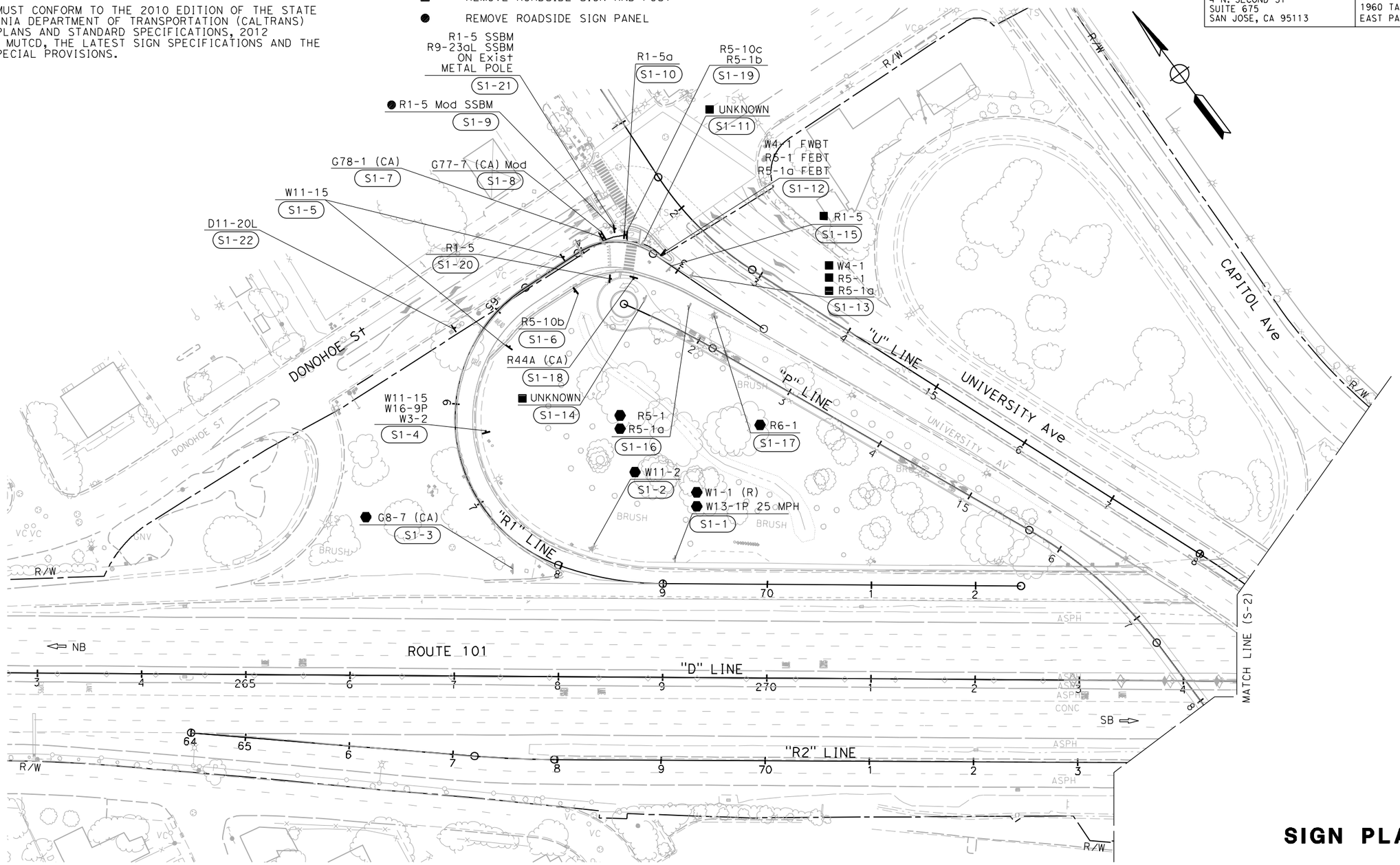

SIGN PLAN

SCALE 1" = 50'

S-1

APPROVED FOR SIGN WORK ONLY

STATE OF CALIFORNIA - DEPARTMENT OF TRANSPORTATION
Caltrans

CONSULTANT FUNCTIONAL SUPERVISOR: HOWARD MICHAEL
CALCULATED-DESIGNED BY: JOSE CORONEL
CHECKED BY: DANIEL HO
REVISED BY: JC
DATE REVISED: 9-15-22

LAST REVISION 9-15-22
DATE PLOTTED => 10/27/2022
TIME PLOTTED => 10:46:38 AM

BORDER LAST REVISED 8/1/2016
USERNAME => jose.coronel
DGN FILE => 04000007591oa001.dgn
RELATIVE BORDER SCALE IS IN INCHES 0 1 2 3
UNIT 0703
PROJECT NUMBER & PHASE 04000007591

Dist	COUNTY	ROUTE	POST MILES TOTAL PROJECT	SHEET No.	TOTAL SHEETS
04	SM	101	0.8/1.1	65	136

REGISTERED CIVIL ENGINEER — 9-15-22 DATE

9-30-22
PLANS APPROVAL DATE

REGISTERED PROFESSIONAL ENGINEER — DANIEL HO No. 50914 Exp. 9-30-23 CIVIL — STATE OF CALIFORNIA

THE STATE OF CALIFORNIA OR ITS OFFICERS OR AGENTS SHALL NOT BE RESPONSIBLE FOR THE ACCURACY OR COMPLETENESS OF SCANNED COPIES OF THIS PLAN SHEET.

AECOM
4 N. SECOND St
SUITE 675
SAN JOSE, CA 95113

CITY OF EAST PALO ALTO
1960 TATE STREET
EAST PALO ALTO, CA 94303

NOTE:

FOR ACCURATE RIGHT OF WAY DATA, CONTACT
RIGHT OF WAY ENGINEERING AT THE DISTRICT OFFICE.

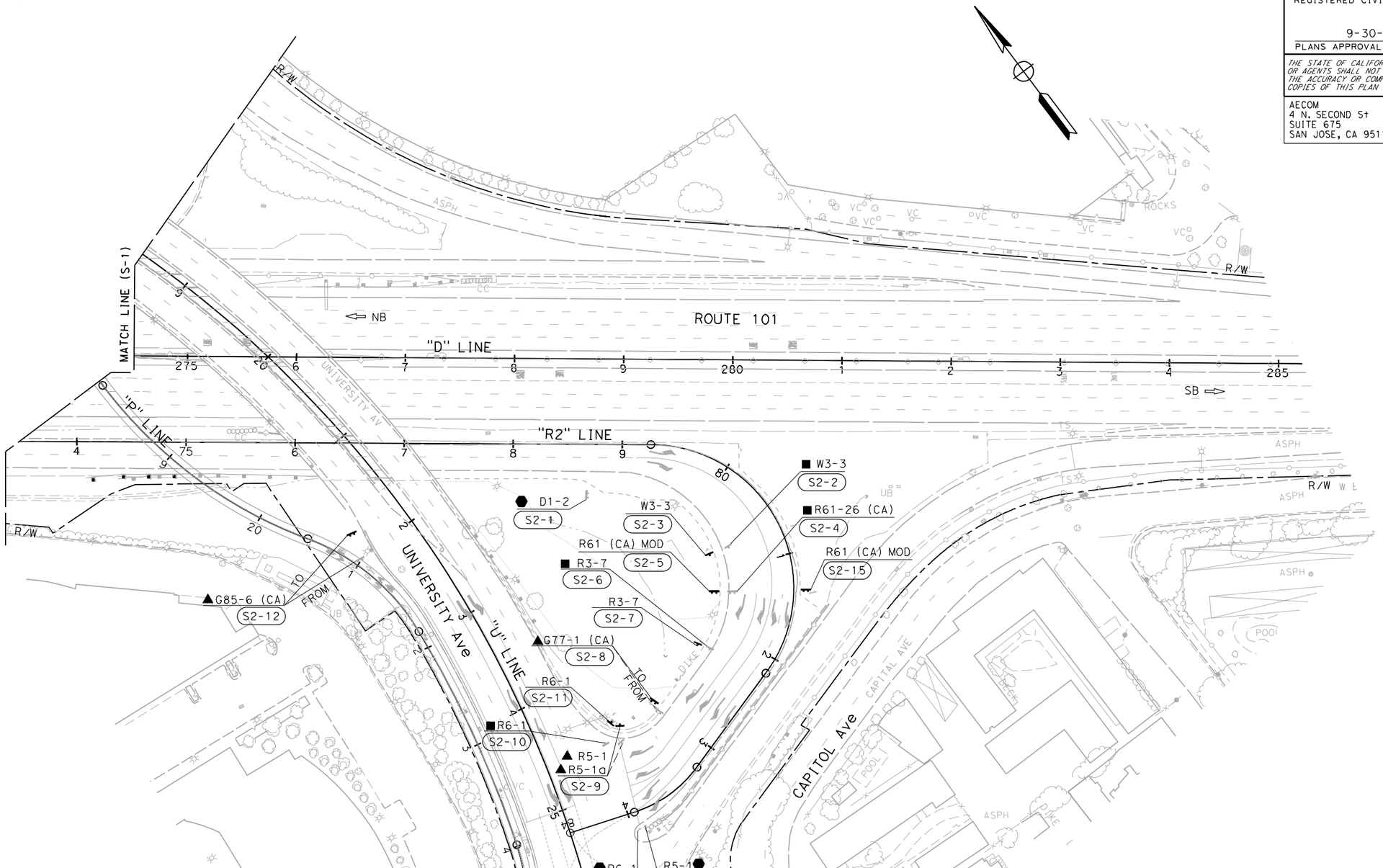

FOR NOTES, ABBREVIATION AND LEGEND, SEE SHEET S-1

APPROVED FOR SIGN WORK ONLY

SIGN PLAN

SCALE 1" = 50'

S-2

REVISED BY	DATE REVISED
JC	9-15-22

CALCULATED-DESIGNED BY: JOSE CORONEL
CHECKED BY: DANIEL HO
CONSULTANT FUNCTIONAL SUPERVISOR: HOWARD MICHAEL
STATE OF CALIFORNIA - DEPARTMENT OF TRANSPORTATION

LAST REVISION 9-15-22
DATE PLOTTED => 10/27/2022
TIME PLOTTED => 10:47:39 AM

BORDER LAST REVISED 8/1/2016
USERNAME => jose.coronel
DGN FILE => 040000075910a002.dgn
RELATIVE BORDER SCALE IS IN INCHES 0 1 2 3
UNIT 0703
PROJECT NUMBER & PHASE 04000007591

NOTE:

FOR ACCURATE RIGHT OF WAY DATA, CONTACT
RIGHT OF WAY ENGINEERING AT THE DISTRICT OFFICE.

Dist	COUNTY	ROUTE	POST MILES TOTAL PROJECT	SHEET No.	TOTAL SHEETS
04	SM	101	0.8/1.1	66	136

REGISTERED CIVIL ENGINEER — DATE 9-15-22

PLANS APPROVAL DATE 9-30-22

REGISTERED PROFESSIONAL ENGINEER — DANIEL HO — No. 50914 — Exp. 9-30-23 — CIVIL — STATE OF CALIFORNIA

THE STATE OF CALIFORNIA OR ITS OFFICERS OR AGENTS SHALL NOT BE RESPONSIBLE FOR THE ACCURACY OR COMPLETENESS OF SCANNED COPIES OF THIS PLAN SHEET.

AECOM
4 N. SECOND St
SUITE 675
SAN JOSE, CA 95113

CITY OF EAST PALO ALTO
1960 TATE STREET
EAST PALO ALTO, CA 94303

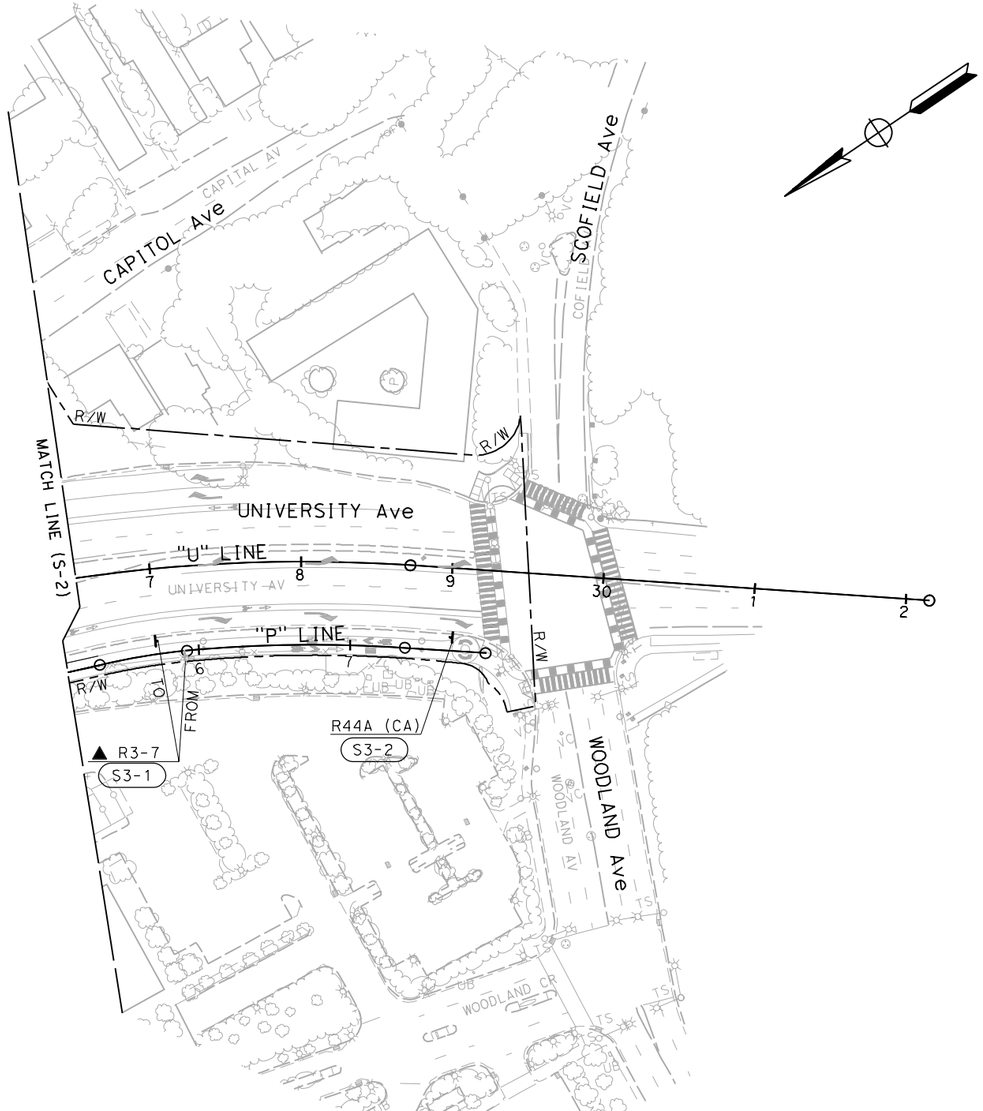

FOR NOTES, ABBREVIATION AND LEGEND, SEE SHEET S-1

SIGN PLAN

SCALE 1" = 50'

S-3

APPROVED FOR SIGN WORK ONLY

STATE OF CALIFORNIA - DEPARTMENT OF TRANSPORTATION	CALCULATED-DESIGNED BY	JOSE CORONEL	
CONSULTANT FUNCTIONAL SUPERVISOR	CHECKED BY	DANIEL HO	
HOWARD MICHAEL	REVISED BY	JC	
	DATE REVISED	9-15-22	

LAST REVISION 9-15-22
DATE PLOTTED => 10/27/2022
TIME PLOTTED => 10:48:50 AM

BORDER LAST REVISED 8/1/2016 | USERNAME => jose.coronel | DGN FILE => 040000075910a003.dgn | RELATIVE BORDER SCALE IS IN INCHES 0 1 2 3 | UNIT 0703 | PROJECT NUMBER & PHASE 04000007591

Dist	COUNTY	ROUTE	POST MILES TOTAL PROJECT	SHEET No.	TOTAL SHEETS
04	SM	101	0.8/1.1	67	136

REGISTERED CIVIL ENGINEER 9-15-22 DATE

9-30-22
PLANS APPROVAL DATE

REGISTERED PROFESSIONAL ENGINEER DANIEL HO No. 50914 Exp. 9-30-23 CIVIL STATE OF CALIFORNIA

THE STATE OF CALIFORNIA OR ITS OFFICERS OR AGENTS SHALL NOT BE RESPONSIBLE FOR THE ACCURACY OR COMPLETENESS OF SCANNED COPIES OF THIS PLAN SHEET.

AECOM
4 N. SECOND St
SUITE 675
SAN JOSE, CA 95113

CITY OF EAST PALO ALTO
1960 TATE STREET
EAST PALO ALTO, CA 94303

G78-1 (CA)

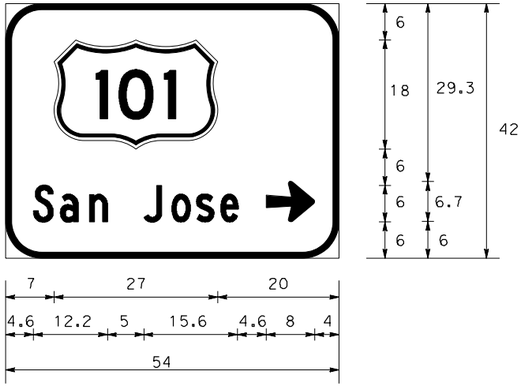

6" RADIUS, 1" BORDER, WHITE ON GREEN;
[SAN JOSE] C; 270° 8" ARROW;

S1-7

G77-7 (CA) Mod

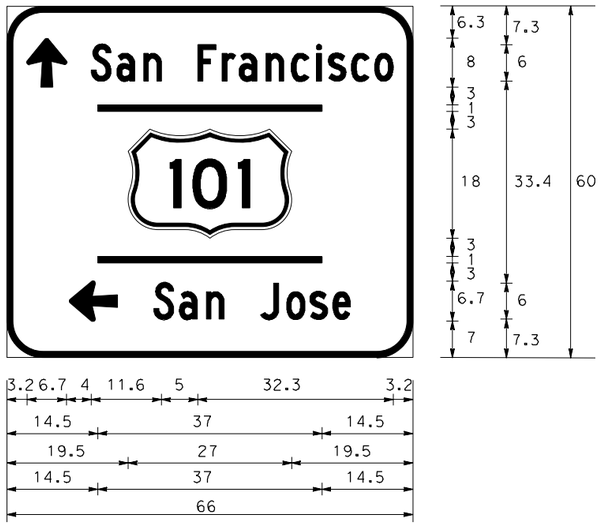

6" RADIUS, 1" BORDER, WHITE ON GREEN;
90° 8" ARROW; [SAN FRANCISCO] C (80% SPACING);
180° 8" ARROW; [SAN JOSE] C (80% SPACING);

S1-8

R61(CA) Mod

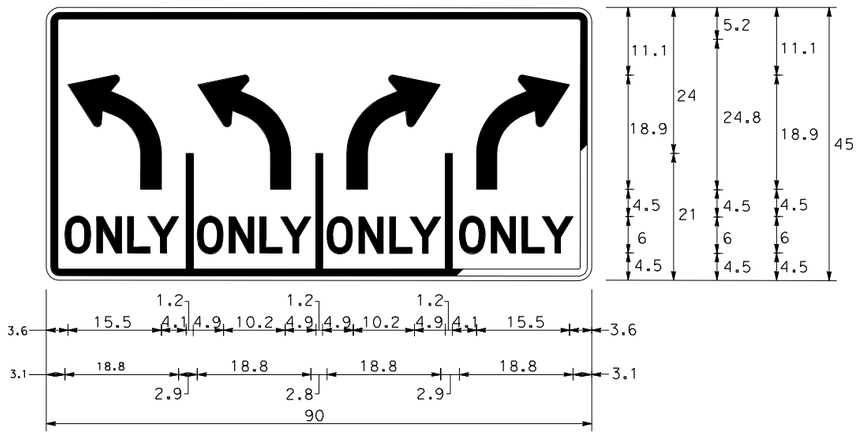

1.5" RADIUS, 0.75" BORDER, INDENT 0.5", BLACK ON WHITE;
45° ADVANCE TURN ARROW; [ONLY] D;
45° ADVANCE TURN ARROW; [ONLY] D;
315° ADVANCE TURN ARROW; [ONLY] D;
315° ADVANCE TURN ARROW; [ONLY] D;

S2-5 S2-15

SIGN DETAILS

SD-1

STATE OF CALIFORNIA - DEPARTMENT OF TRANSPORTATION
Caltrans®

CONSULTANT FUNCTIONAL SUPERVISOR: HOWARD MICHAEL
CALCULATED-DESIGNED BY: JOSE CORONEL
CHECKED BY: DANIEL HO
REVISED BY: JC
DATE REVISED: 9-15-22

LAST REVISION 9-15-22
DATE PLOTTED => 10/27/2022
TIME PLOTTED => 10:48:36 AM

BORDER LAST REVISED 8/1/2016
USERNAME => jose.coronel
DGN FILE => 04000007591ob001.dgn
RELATIVE BORDER SCALE IS IN INCHES 0 1 2 3
UNIT 0703
PROJECT NUMBER & PHASE 04000007591

Dist	COUNTY	ROUTE	POST MILES TOTAL PROJECT	SHEET No.	TOTAL SHEETS
04	SM	101	0.8/1.1	68	136

REGISTERED CIVIL ENGINEER — DATE 9-15-22

PLANS APPROVAL DATE 9-30-22

REGISTERED PROFESSIONAL ENGINEER — DANIEL HO No. 50914 Exp. 9-30-23 CIVIL — STATE OF CALIFORNIA

THE STATE OF CALIFORNIA OR ITS OFFICERS OR AGENTS SHALL NOT BE RESPONSIBLE FOR THE ACCURACY OR COMPLETENESS OF SCANNED COPIES OF THIS PLAN SHEET.

AECOM
4 N. SECOND St
SUITE 675
SAN JOSE, CA 95113

CITY OF EAST PALO ALTO
1960 TATE STREET
EAST PALO ALTO, CA 94303

ROADSIDE SIGN QUANTITIES

SHEET No.	SIGN No. (SIGN-No.)	SIGN DESIGNATION	SIGN PANEL SIZE L x D	"C" DIM IN FEET	POST SIZE AND LENGTH 4"x4"	4"x6"	6"x6"	ROADSIDE SIGN ONE POST	ROADSIDE SIGN TWO POST	INSTALL SIGN (SSBM)	REMOVE ROADSIDE SIGN	RELOCATE ROADSIDE SIGN ONE POST	RELOCATE ROADSIDE SIGN TWO POST	TREATED WOOD WASTE
					EA			EA		EA	EA	EA		LB
S-1	S1-4	W11-1	30" x 30"	7'			18.5'	1						
		W16-9p	30" x 18"											
		W3-2	30" x 30"											
	S1-5	W11-15	30" x 30"	7'	12'			2						
	S1-6	R5-10b	30" x 18"	7'	11'			1						
	S1-7	G78-1(CA)	54" x 42"	7'			15'		1					
	S1-8	G77-7(CA) Mod	66" x 60"											
	S1-9	R1-5 Mod		7'							1			70
	S1-10	R1-5a	36" x 48"			14'		1						
	S1-11	UNKNOWN									1			70
	S1-12	W4-1	36" x 36"	5'		11'		1						
		R5-1	36" x 36"											
		R5-1a	42" x 30"											
	S1-13	W4-1									1			70
		R5-1												
		R5-1a												
	S1-14	UNKNOWN									1			70
	S1-15	R1-5									1			70
	S1-18	R44A (CA)	12" x 24"	7'	11.50'			1						
	S1-19	R5-1b	12" x 18"	7'	12'			1						
		R5-10c	24" x 12"											
	S1-20	R1-5	36" x 36"	7'		11'		1						
	S1-21	R1-5	36" x 36"	7'						2				
		R9-23aL	12" x 18"											
S-2	S2-2	W3-3									1			70
	S2-3	W3-3	48" x 48"	7'	12.50'			1						
	S2-4	R61-26 (CA)									1			70
	S2-5	R61 (CA) Mod	90" x 45"	7'		13.50'			1					
	S2-6	R3-7									1			70
	S2-7	R3-7	72" x 60"	7'	13.50'				1					
	S2-8	G77-1											1	
	S2-9	R5-1										1		
		R5-1a												
	S2-10	R6-1									1			70
	S2-11	R6-1	54" x 18"	7'	12'			1						
	S2-12	G85-6 (CA)											1	
	S2-15	R61 (CA) Mod	90" x 45"	7'		13.50'			1					
S-3	S3-1	R3-7	42" x 30"	5'		11'						1		
	S3-2	R44A (CA)	12" x 24"	7'	11.50'			1						
							TOTAL	12	4	2	9	2	2	630

SIGN QUANTITIES

SQ-1

REVISED BY: JC — DATE REVISED: 9-15-22
CALCULATED-DESIGNED BY: JOSE CORONEL — CHECKED BY: DANIEL HO
CONSULTANT FUNCTIONAL SUPERVISOR: HOWARD MICHAEL
STATE OF CALIFORNIA - DEPARTMENT OF TRANSPORTATION — Caltrans

LAST REVISION 9-15-22 — DATE PLOTTED => 10/27/2022 — TIME PLOTTED => 10:49:31 AM

BORDER LAST REVISED 8/1/2016 — USERNAME => jose.coronel — DGN FILE => 040000075910c001.dgn — RELATIVE BORDER SCALE IS IN INCHES 0 1 2 3 — UNIT 0703 — PROJECT NUMBER & PHASE 04000007591

Dist	COUNTY	ROUTE	POST MILES TOTAL PROJECT	SHEET No.	TOTAL SHEETS
04	SM	101	0.8/1.1	69	136

REGISTERED CIVIL ENGINEER 9-15-22 DATE

9-30-22
PLANS APPROVAL DATE

REGISTERED PROFESSIONAL ENGINEER DANIEL HO No. 50914 Exp. 9-30-23 CIVIL STATE OF CALIFORNIA

THE STATE OF CALIFORNIA OR ITS OFFICERS OR AGENTS SHALL NOT BE RESPONSIBLE FOR THE ACCURACY OR COMPLETENESS OF SCANNED COPIES OF THIS PLAN SHEET.

AECOM
4 N. SECOND St
SUITE 675
SAN JOSE, CA 95113

CITY OF EAST PALO ALTO
1960 TATE STREET
EAST PALO ALTO, CA 94303

SIGN PANEL MATERIAL QUANTITIES

SHEET No.	SIGN No. (SIGN-No.)	SIGN DESIGNATION	PANEL SIZE L x D	PANEL AREA SQFT	SINGLE FACED	DOUBLE FACED	BACKGROUND SHEETING COLOR	BACKGROUND RETROREFLECTIVE ASTM TYPE	LEGEND SHEETING COLOR	PROTECTIVE FILM PREMIUM
S-1	S1-4	W11-15	30" x 30"	6.25			FLUORESCENT YELLOW	XI	BLACK	x
		W16-9P	30" x 18"	3.75	x		YELLOW	XI	BLACK	x
		W3-2	30" x 30"	6.25			YELLOW	XI	RED,WHITE,BLACK	x
	S1-5	W11-15	30" x 30"	6.25	x		FLUORESCENT YELLOW	XI	BLACK	x
	S1-6	R5-10b	30" x 18"	3.75		x	WHITE	XI	BLACK	x
	S1-7	G78-1 (CA)	54" x 42"	15.75			GREEN	XI	WHITE	x
	S1-8	G77-7 (CA) Mod	66" x 60"	27.5	x		GREEN	XI	WHITE	x
	S1-10	R1-5a	36" x 48"	12	x		WHITE	XI	R,BLACK	x
	S1-12	W4-1	36" x 36"	9		x	YELLOW	XI	BLACK	x
		R5-1	36" x 36"	9			WHITE,RED	XI	WHITE	x
		R5-1a	42" x 30"	8.75			WHITE,RED	XI	WHITE	x
	S1-18	R44A (CA)	12" x 24"	2	x		WHITE	XI	BLACK	x
	S1-19	R5-1b	12" x 18"	1.5	x		WHITE	XI	BLACK	x
		R5-10c	24" x 12"	2			RED	XI	WHITE	x
	S1-20	R1-5	36" x 36"	9	x		WHITE	XI	BLACK,RED	x
	S1-21	R1-5	36" x 36"	9	x		WHITE	XI	BLACK,RED	x
		R9-23aL	12" x 18"	1.5	x		WHITE	XI	BLACK	x
	S1-22	D11-20L	12" x 18"	1.5	x		GREEN	XI	WHITE	x
S-2	S2-3	W3-3	48" x 48"	16	x		YELLOW, BLACK	XI	RED, YELLOW, GREEN	x
	S2-5	R61(CA) Mod	90" x 45"	28.1	x		WHITE	XI	BLACK	x
	S2-7	R3-7	72" x 60"	30	x		WHITE	XI	BLACK	x
	S2-11	R6-1	54" x 18"	6.75	x		BLACK	XI	WHITE,BLACK	x
	S2-15	R61(CA) Mod	90" x 45"	28.1	x		WHITE	XI	BLACK	x
S-3	S3-2	R44A (CA)	12" x 24"	2	x		WHITE	XI	BLACK	x
			TOTAL	245.7						

STATE OF CALIFORNIA - DEPARTMENT OF TRANSPORTATION
Caltrans®

CONSULTANT FUNCTIONAL SUPERVISOR: HOWARD MICHAEL
CALCULATED-DESIGNED BY: JOSE CORONEL
CHECKED BY: DANIEL HO
REVISED BY: JC
DATE REVISED: 9-15-22

SIGN QUANTITIES

SQ-2

LAST REVISION 9-15-22
DATE PLOTTED => 10/27/2022
TIME PLOTTED => 10:50:00 AM

Dist	COUNTY	ROUTE	POST MILES TOTAL PROJECT	SHEET No.	TOTAL SHEETS
04	SM	101	0.8/1.1	70	136

REGISTERED CIVIL ENGINEER — DATE 9-15-22

PLANS APPROVAL DATE 9-30-22

REGISTERED PROFESSIONAL ENGINEER — DANIEL HO No. 50914 Exp. 9-30-23 CIVIL — STATE OF CALIFORNIA

THE STATE OF CALIFORNIA OR ITS OFFICERS OR AGENTS SHALL NOT BE RESPONSIBLE FOR THE ACCURACY OR COMPLETENESS OF SCANNED COPIES OF THIS PLAN SHEET.

AECOM
4 N. SECOND St
SUITE 675
SAN JOSE, CA 95113

CITY OF EAST PALO ALTO
1960 TATE STREET
EAST PALO ALTO, CA 94303

REMOVE CONCRETE

SHEET No.	STATION	SIDE	REMOVE CONCRETE			
			CURB	SIDEWALK & ISLAND	CONCRETE BARRIER	DIKE
			LF	SF	LF	LF
L-1	"R1" 65+45 TO "U" 11+82.18	Rt	293	2136		
	"R1" 65+45 TO "U" 12+96.44	Lt	267			
	"U" 12+44.73 TO "U" 16+60	Rt		2080		
L-1 - L-2	"D" 273+46.92 TO "D" 274+56.92	CL			110	
L-2	"R2" 80+62.89 TO "R2" 83+22.10	Rt				202
L-2 - L-3	"U" 21+80 TO "U" 29+61.61	Rt	796	5220		
L-3	"U" 26+60 TO "U" 29+13	Lt	530	1864		
	"U" 28+68.08 TO "U" 29+43.83	Lt	100	1240		
		TOTAL	1986	12,540	110	202

EARTHWORK QUANTITIES SUMMARY

STATION	ROADWAY EXCAVATION TYPE (Z-2) (AERIALLY DEPOSITED LEAD)	EMBANKMENT (N)	IMPORTED BORROW
	CY	CY	CY
"P" 11+20 TO 15+06		9100	9100
"P" 20+46 TO 27+90	620		
"R1" 62+34 TO 65+45	415		
"R2" 79+02 TO 84+30	370		
TOTAL	1405	9100	9100

MINOR CONCRETE (MISCELLANEOUS CONSTRUCTION)

SHEET No.	STATION	SIDE	ISLAND & SIDEWALK	A2-6 CURB	B1-6 CURB	B2-6 CURB	TYPE E CURB	CURB RAMP (CASE A)	CURB RAMP (CASE F)	CURB RAMP (CASE G)	ISLAND PASSAGEWAY	HMA DIKE (TYPE D)
			CY	CY	CY	CY	CY	EA	EA	EA	EA	LF
L-1	"R1" 65+45 TO "U" 11+82.18	Lt/Rt	7.2			16.2					1	
	"R1" 65+45 TO "U" 12+96.44	Lt		7.4					1			180
L-2	"R2" 79+59.03 TO "R2" 83+03.60	Rt					9.9					225
L-2 - L-3	"U" 21+80 TO "U" 29+61.61	Rt	14.6	35.0						2		
L-3	"U" 26+60 TO "U" 29+13	Lt/Rt	9.5		14.6							
	"U" 28+68.08 TO "U" 29+43.83	Lt	10.0	7.2				1		1		
	TOTAL		41.3	49.6	14.6	16.2	9.9	1	1	3	1	405

ROADWAY QUANTITIES

SHEET No.	STATION	HOT MIX ASPHALT (TYPE A)	CLASS 2 AB
		TON	CY
L-1	"R1" 65+45 TO "U" 13+07	535	83.1
	"P" 11+20 TO "P" 15+06	240	61
L-2	"R2" 78+92 TO "R2" 84+30	599.4	137.5
L-2 - L3	"P" 20+46 TO "P" 27+90	320	82
	"U" 21+80 TO "U" 29+62	33	6
L-3	"U" 26+60 TO "U" 29+20	174	31
	"U" 28+68 TO "U" 29+44	6	1.5
	TOTAL	1907.4	402.1

COLD PLANE ASPHALT CONCRETE PAVEMENT

SHEET No.	STATION	SIDE	AREA
			SQYD
L-1	"R1" 65+45 TO "R1" 65+55	Lt	17.5
	"R1" 62+24 TO "R1" 62+34	Rt	12.5
L-2	"R2" 78+92 TO "R2" 79+05	Rt	25.5
	TOTAL		55.5

REMOVE BASE AND SURFACING

SHEET No.	STATION	SIDE	REMOVE ASPHALT CONCRETE PAVEMENT
			CY
L-1	"R1" 65+45 TO "U" 12+96.31	Lt/Rt	215
L-2 - L-3	"U" 21+80 TO "U" 29+61.61	Rt	264
L-3	"U" 26+60 TO "U" 29+20	Rt	14
	"U" 28+68.08 TO "U" 29+43.83	Lt	42
	"U" 29+50 TO "U" 30+15	Rt	5
	TOTAL		540

TREATED WOOD WASTE

DESCRIPTION	LB
FROM MIDWEST GUARDRAIL SYSTEM	882
FROM ROADSIDE SIGN QUANTITES	630
TOTAL	1512

IRRIGATION CONDUIT

SHEET No.	STATION	8" WELDED STEEL PIPE CONDUIT	2" PLASTIC PIPE (CLASS 315)	ELECTRICAL CONDUIT (CNC)
		LF		
L-2	STA 81+00	112	124	124

CONCRETE BARRIER

SHEET No.	STATION	SIDE	TYPE 60R (Mod A)	TYPE 60R (Mod B)	TYPE MS
			LF	LF	LF
L-1 - L-2	"D" 273+57.00 TO "D" 274+47.00	CL	90		
L-2	"R2" 74+99.73 TO "R2" 75+25.85	Rt		24	
L-2	"R2" 75+25.85 TO "R2" 76+21.22	Rt			95
	TOTAL		90	24	95

MIDWEST GUARDRAIL SYSTEM

SHEET No.	LOCATION	SIDE	GUARD RAILING LAYOUT	MIDWEST GUARDRAIL SYSTEM(STEEL POST)	TRANSITION RAILING (TYPE WB-31)	ALTERNATIVE IN-LINE TERMINAL SYSTEM	END CAP (TYPE A)	END CAP (TYPE TC)	END ANCHOR ASSEMBLY (TYPE SFT-m)	END ANCHOR BLOCK	VEGETATION CONTROL (MINOR CONCRETE)	REMOVE GUARDRAIL	TREATED WOOD WASTE
			TYPE	LF	EA	EA	EA	EA	EA	EA	SQYD	LF	LB
L-1	BENT 2	Lt	12DD	75			1		1		46		
L-2	BENT 4	Rt	12A	83	1	1		1		1	93	73	882
	TOTAL			158	1	1	1	1	1	2	139	73	882

FENCE

SHEET No.	STATION	SIDE	TYPE CL-6, VINYL-CLAD - BLACK)	REMOVE CL FENCE
			LF	LF
L-1	"U" 12+06.45 TO "U" 15+89.45	Rt	461	
L-2 - L-3	"U" 20+92.52 TO "U" 28+16.28	Rt		530
		TOTAL	461	530

SUMMARY OF QUANTITIES

Q-1

CALCULATED-DESIGNED BY	CHECKED BY	REVISED BY	DATE REVISED
JOSE CORONEL	DANIEL HO	JC	9-15-22

CONSULTANT FUNCTIONAL SUPERVISOR: HOWARD MICHAEL

STATE OF CALIFORNIA - DEPARTMENT OF TRANSPORTATION

Caltrans

LAST REVISION 9-15-22 — DATE PLOTTED => 10/27/2022 — TIME PLOTTED => 10:50:55 AM

BORDER LAST REVISED 8/1/2016 | USERNAME => jose.coronel | DGN FILE => 04000007591pa001.dgn | RELATIVE BORDER SCALE IS IN INCHES 0 1 2 3 | UNIT 0703 | PROJECT NUMBER & PHASE 04000007591

Dist	COUNTY	ROUTE	POST MILES TOTAL PROJECT	SHEET No.	TOTAL SHEETS
04	SM	101	0.8/1.1	71	136

REGISTERED CIVIL ENGINEER — DATE 9-15-22

PLANS APPROVAL DATE 9-30-22

REGISTERED PROFESSIONAL ENGINEER — DANIEL HO — No. 50914 — Exp. 9-30-23 — CIVIL — STATE OF CALIFORNIA

THE STATE OF CALIFORNIA OR ITS OFFICERS OR AGENTS SHALL NOT BE RESPONSIBLE FOR THE ACCURACY OR COMPLETENESS OF SCANNED COPIES OF THIS PLAN SHEET.

AECOM
4 N. SECOND St
SUITE 675
SAN JOSE, CA 95113

CITY OF EAST PALO ALTO
1960 TATE STREET
EAST PALO ALTO, CA 94303

NOTES:

1. FOR ACCURATE RIGHT OF WAY DATA, CONTACT RIGHT OF WAY ENGINEERING AT THE DISTRICT OFFICE.
2. WHEN TEMPORARY HIGH VISIBILITY FENCE IS REQUIRED SINGLE EXISTING TREE TO BE PROTECTED, PLACE FENCE AT A MINIMUM OF 15' AWAY, AROUND TRUNK OF TREE.
3. EXISTING LARGE TREE REMOVAL SHOWN FOR INFORMATION ONLY. SMALL TREES, SHRUBS, AND OTHER EXISTING VEGETATION TO BE REMOVED UNDER CLEARING AND GRUBBING WORK IS NOT SHOWN FOR GRAPHIC CLARITY.

LEGEND:

⊗ REMOVE TREE

⊙ Exist TREE TO REMAIN No.

xx—THVF—xx TEMPORARY HIGH VISIBILTY FENCE

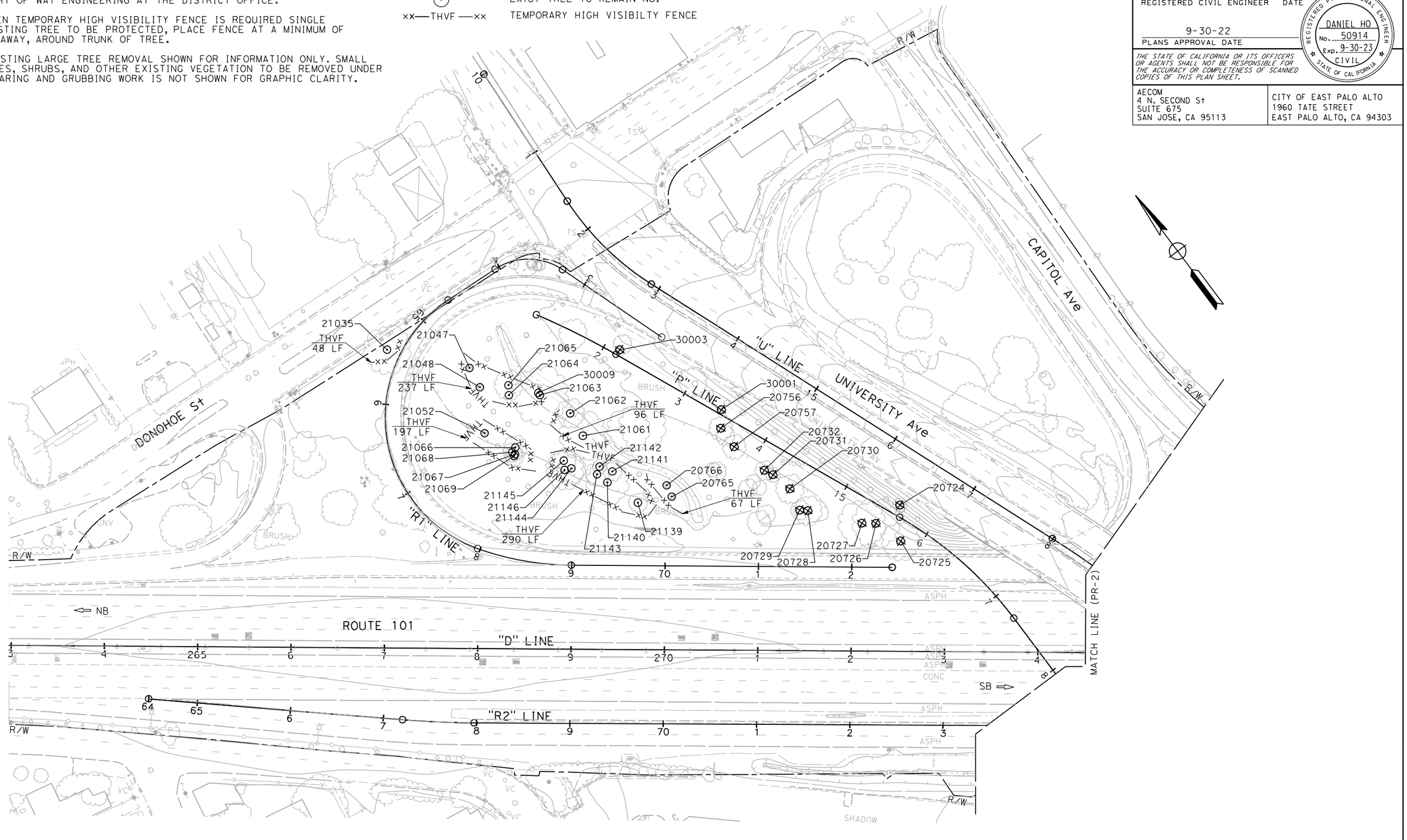

PLANT REMOVAL PLAN

SCALE 1" = 50'

PR-1

APPROVED FOR PLANT REMOVAL WORK ONLY

STATE OF CALIFORNIA - DEPARTMENT OF TRANSPORTATION

CONSULTANT FUNCTIONAL SUPERVISOR: HOWARD MICHAEL

CALCULATED-DESIGNED BY: JOSE CORONEL

CHECKED BY: DANIEL HO

REVISED BY: JC — DATE REVISED: 9-15-22

LAST REVISION — DATE PLOTTED => 10/27/2022 — TIME PLOTTED => 10:53:01 AM

BORDER LAST REVISED 8/1/2016 | USERNAME => jose.coronel | DGN FILE => 04000007591se001.dgn | RELATIVE BORDER SCALE IS IN INCHES 0 1 2 3 | UNIT 0703 | PROJECT NUMBER & PHASE 04000007591

NOTE:

FOR ACCURATE RIGHT OF WAY DATA, CONTACT
RIGHT OF WAY ENGINEERING AT THE DISTRICT OFFICE.

Dist	COUNTY	ROUTE	POST MILES TOTAL PROJECT	SHEET No.	TOTAL SHEETS
04	SM	101	0.8/1.1	72	136

REGISTERED CIVIL ENGINEER — 9-15-22 DATE

9-30-22
PLANS APPROVAL DATE

REGISTERED PROFESSIONAL ENGINEER
DANIEL HO
No. 50914
Exp. 9-30-23
CIVIL
STATE OF CALIFORNIA

THE STATE OF CALIFORNIA OR ITS OFFICERS OR AGENTS SHALL NOT BE RESPONSIBLE FOR THE ACCURACY OR COMPLETENESS OF SCANNED COPIES OF THIS PLAN SHEET.

AECOM
4 N. SECOND St
SUITE 675
SAN JOSE, CA 95113

CITY OF EAST PALO ALTO
1960 TATE STREET
EAST PALO ALTO, CA 94303

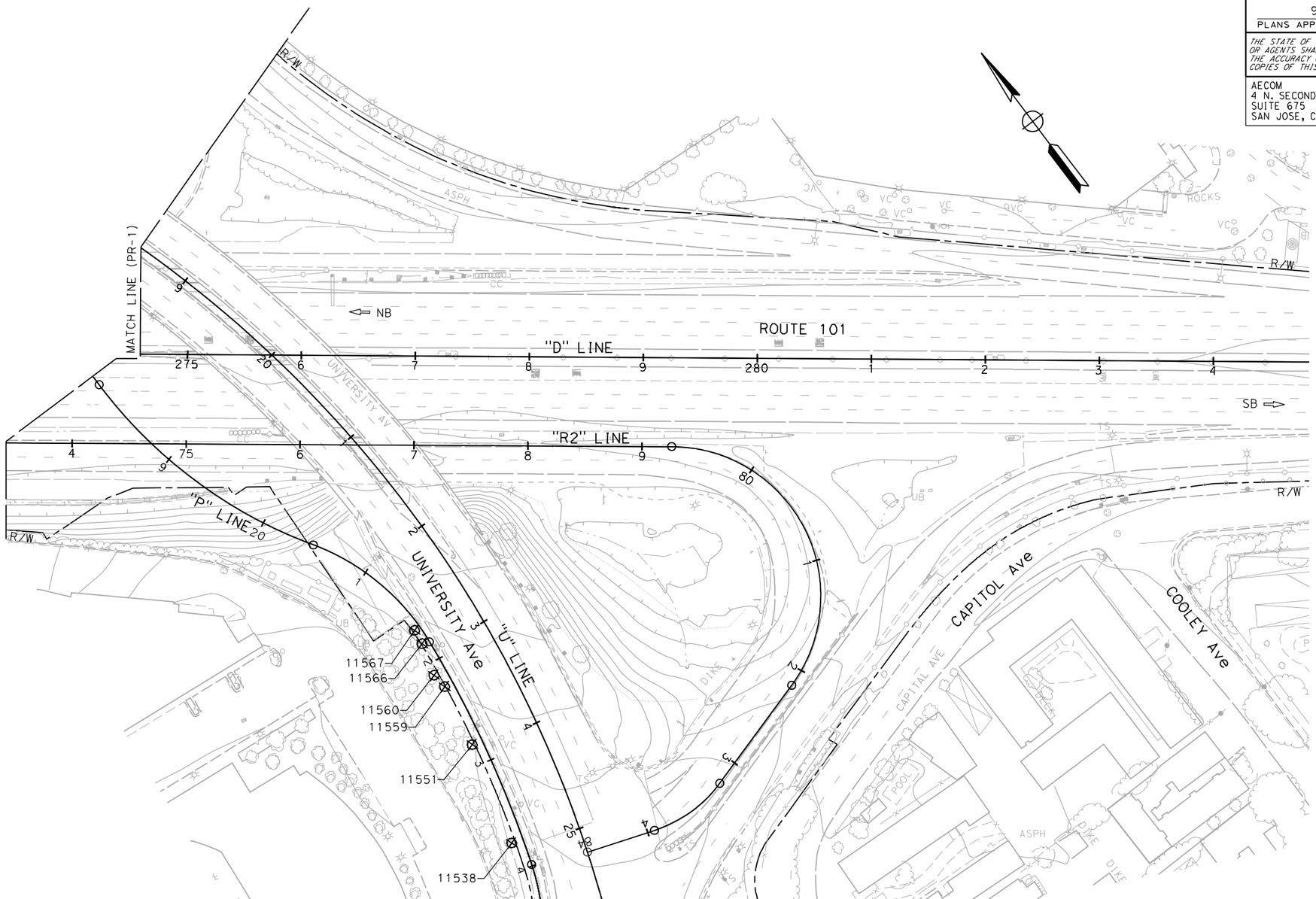

FOR LEGEND AND NOTES
SEE SHEET PR-1

PLANT REMOVAL PLAN

SCALE 1" = 50'

PR-2

APPROVED FOR PLANT REMOVAL WORK ONLY

CALCULATED-DESIGNED BY	CHECKED BY	REVISED BY	DATE REVISED
JOSE CORONEL	DANIEL HO	JC	9-15-22

CONSULTANT FUNCTIONAL SUPERVISOR: HOWARD MICHAEL

STATE OF CALIFORNIA - DEPARTMENT OF TRANSPORTATION

Caltrans

LAST REVISION 9-15-22
DATE PLOTTED => 10/27/2022
TIME PLOTTED => 10:53:11 AM

BORDER LAST REVISED 8/1/2016 | USERNAME => jose.coronel | DGN FILE => 04000007591se002.dgn | RELATIVE BORDER SCALE IS IN INCHES 0 1 2 3 | UNIT 0703 | PROJECT NUMBER & PHASE 04000007591

NOTE:

FOR ACCURATE RIGHT OF WAY DATA, CONTACT
RIGHT OF WAY ENGINEERING AT THE DISTRICT OFFICE.

Dist	COUNTY	ROUTE	POST MILES TOTAL PROJECT	SHEET No.	TOTAL SHEETS
04	SM	101	0.8/1.1	73	136

9-15-22
REGISTERED CIVIL ENGINEER DATE

9-30-22
PLANS APPROVAL DATE

REGISTERED PROFESSIONAL ENGINEER
DANIEL HO
No. 50914
Exp. 9-30-23
CIVIL
STATE OF CALIFORNIA

THE STATE OF CALIFORNIA OR ITS OFFICERS OR AGENTS SHALL NOT BE RESPONSIBLE FOR THE ACCURACY OR COMPLETENESS OF SCANNED COPIES OF THIS PLAN SHEET.

AECOM
4 N. SECOND St
SUITE 675
SAN JOSE, CA 95113

CITY OF EAST PALO ALTO
1960 TATE STREET
EAST PALO ALTO, CA 94303

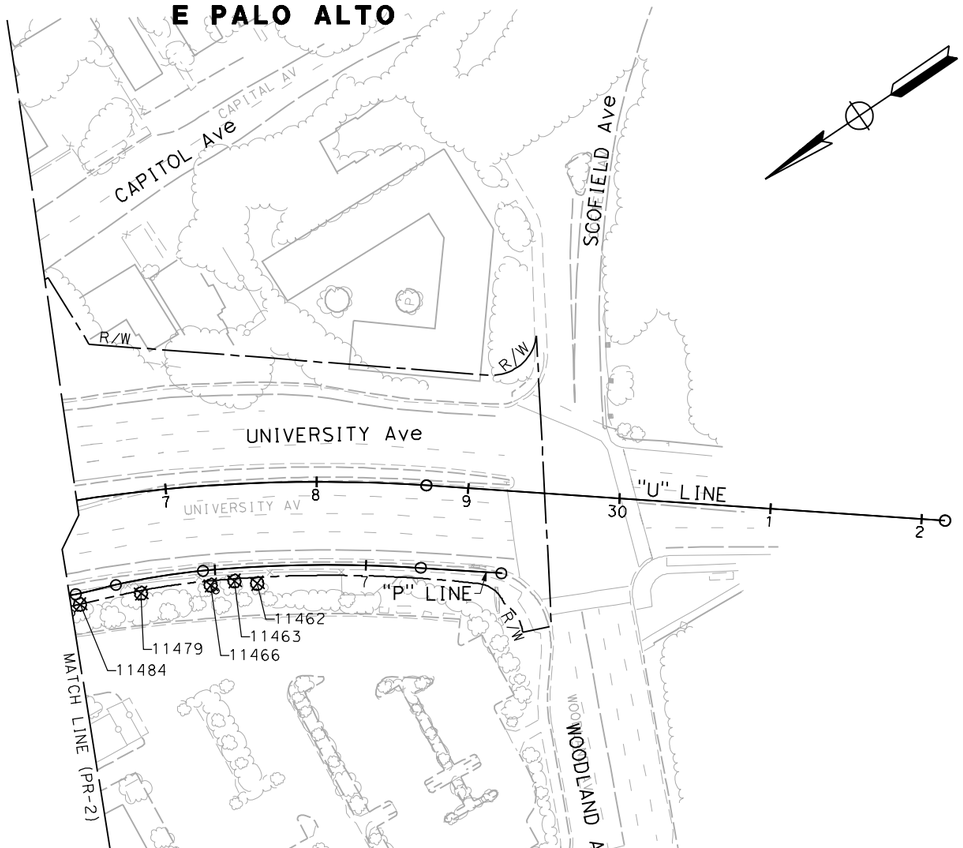

FOR LEGEND AND NOTES
SEE SHEET PR-1

PLANT REMOVAL PLAN

SCALE 1" = 50'

PR-3

STATE OF CALIFORNIA - DEPARTMENT OF TRANSPORTATION
Caltrans

CONSULTANT FUNCTIONAL SUPERVISOR: HOWARD MICHAEL
CALCULATED-DESIGNED BY:
CHECKED BY: DANIEL HO
REVISED BY: JC
DATE REVISED: 9-15-22
JOSE CORONEL

LAST REVISION 9-15-22
DATE PLOTTED => 10/27/2022
TIME PLOTTED => 10:55:21 AM

BORDER LAST REVISED 8/1/2016
USERNAME => jose.coronel
DGN FILE => 04000007591se003.dgn
RELATIVE BORDER SCALE IS IN INCHES 0 1 2 3
UNIT 0703
PROJECT NUMBER & PHASE 04000007591

Dist	COUNTY	ROUTE	POST MILES TOTAL PROJECT	SHEET No.	TOTAL SHEETS
04	SM	101	0.8/1.1	74	136

REGISTERED CIVIL ENGINEER — DATE 9-15-22

PLANS APPROVAL DATE 9-30-22

REGISTERED PROFESSIONAL ENGINEER — DANIEL HO No. 50914 Exp. 9-30-23 CIVIL — STATE OF CALIFORNIA

THE STATE OF CALIFORNIA OR ITS OFFICERS OR AGENTS SHALL NOT BE RESPONSIBLE FOR THE ACCURACY OR COMPLETENESS OF SCANNED COPIES OF THIS PLAN SHEET.

AECOM
4 N. SECOND St
SUITE 675
SAN JOSE, CA 95113

CITY OF EAST PALO ALTO
1960 TATE STREET
EAST PALO ALTO, CA 94303

TREES TO BE REMOVED

Tree No.	DBH (inches)	COMMON NAME	NORTHING	EASTING
11462	18	REDWOOD	1993607.042	6085237.204
11463	18	REDWOOD	1993618.605	6085246.894
11466	15	REDWOOD	1993633.186	6085253.434
11479	22	COAST LIVE OAK	1993674.242	6085274.777
11484	23	COAST LIVE OAK	1993711.750	6085291.138
11538	13	COAST LIVE OAK	1993831.472	6085345.822
11551	6	JAPANESE FLOWERING CHERRY	1993921.293	6085370.119
11559	6	JAPANESE FLOWERING CHERRY	1993976.404	6085381.357
11560	6	JAPANESE FLOWERING CHERRY	1993990.044	6085379.908
11566	11	REDWOOD	1994018.474	6085388.161
11567	11	REDWOOD	1994031.791	6085389.902
20724	17, 13, 13	PERUVIAN PEPPER	1994620.528	6085274.123
20725	40	ASH	1994589.219	6085251.715
20726	27	RED OAK	1994620.303	6085241.832
20727	27	RED OAK	1994629.499	6085230.074
20728	30	REDWOOD	1994675.104	6085192.025
20729	20	REDWOOD	1994680.709	6085185.449
20730	37	REDWOOD	1994705.374	6085190.553
20731	17, 16	REDWOOD	1994728.290	6085185.109
20732	27	REDWOOD	1994737.687	6085180.692
20756	8, 8, 7, 6, 4	CHINESE PHOTINIA	1994801.708	6085170.460
20757	10, 8	CAMPHOR	1994777.310	6085170.019
30001	6, 5, 5, 5, 4, 4, 4, 4	BOX ELDER	1994817.183	6085182.944
30003	8	GINKO BILOBA	1994934.068	6085134.636
30006	14	COAST LIVE OAK	1993743.333	6085305.494

EXISTING TREES TO BE PROTECTED

Tree No.	DBH (inches)	COMMON NAME	NORTHING	EASTING
20765	4	NOT DETERMINED	1994774.861	6085084.614
20766	5	JAPANESE FLOWERING CHERRY	1994787.777	6085087.543
21035	46	COAST LIVE OAK	1995084.202	6084935.715
21047	4	NOT DETERMINED	1995015.499	6084994.425
21048	4	CHINESE PISTACHE	1994992.247	6084991.028
21052	4	NOT DETERMINED	1994949.877	6084965.450
21061	31	ASH	1994884.265	6085047.811
21062	20	COAST LIVE OAK	1994911.607	6085051.392
21063	27	RED OAK	1994946.763	6085037.264
21064	30	REDWOOD STUMP	1994966.737	6085010.657
21065	79	REDWOOD	1994975.574	6085016.644
21066	33	REDWOOD	1994917.852	6084982.242
21067	11	REDWOOD	1994912.261	6084977.751
21068	22	REDWOOD	1994915.713	6084976.547
21069	27	REDWOOD	1994911.254	6084975.900
21140	69	REDWOOD	1994828.594	6085038.707
21141	27, 24, 15	REDWOOD	1994834.791	6085050.007
21142	16, 8	REDWOOD	1994847.110	6085042.128
21143	24, 15	REDWOOD	1994842.198	6085035.060
21144	34	REDWOOD	1994863.824	6085016.941
21145	24, 12, 6	REDWOOD	1994875.340	6085015.376
21146	29, 26, 18	REDWOOD	1994866.803	6085010.062
30009	21	BLACKWOOD ACACIA	1994949.763	6085037.264

FENCE

SHEET No.	STATION	SIDE	TEMPORARY HIGH VISIBILITY FENCE
			LF
PR-1	"U" 11+70.00 TO "U" 14+70.00	Rt	935
		TOTAL	935

APPROVED FOR PLANT REMOVAL WORK ONLY

PLANT REMOVAL PLAN

PR-4

REVISED BY	JC	
DATE REVISED	9-15-22	
CALCULATED-DESIGNED BY	JOSE CORONEL	
CHECKED BY	DANIEL HO	
CONSULTANT FUNCTIONAL SUPERVISOR	HOWARD MICHAEL	

STATE OF CALIFORNIA - DEPARTMENT OF TRANSPORTATION — Caltrans

LAST REVISION 9-15-22 — DATE PLOTTED => 10/27/2022 — TIME PLOTTED => 10:55:11 AM

BORDER LAST REVISED 8/1/2016 | USERNAME => jose.coronel | DGN FILE => 04000007591se004.dgn | RELATIVE BORDER SCALE IS IN INCHES 0 1 2 3 | UNIT 0703 | PROJECT NUMBER & PHASE 04000007591

Dist	COUNTY	ROUTE	POST MILES TOTAL PROJECT	SHEET No.	TOTAL SHEETS
04	SM	101	0.8/1.1	75	136

REGISTERED LANDSCAPE ARCHITECT — 02/28/2023 DATE

9-30-2022
PLANS APPROVAL DATE

LICENSED LANDSCAPE ARCHITECT — JIRI GEORGE STRNAD — No. 4629 — SIGNATURE — 12-31-24 EXPIRATION DATE — 02-28-23 DATE — STATE OF CALIFORNIA

THE STATE OF CALIFORNIA OR ITS OFFICERS OR AGENTS SHALL NOT BE RESPONSIBLE FOR THE ACCURACY OR COMPLETENESS OF SCANNED COPIES OF THIS PLAIN SHEET.

AECOM
4 N. SECOND St
SUITE 675
SAN JOSE, CA 95113

CITY OF EAST PALO ALTO
1960 TATE STREET
EAST PALO ALTO, CA 94303

NOTES: APPLICABLE WHERE CIRCLED (OR IN BRACKET)

(1) INSTALL RISER ASSEMBLY (TYPE V) SPRINKLERS WITH EMITTERS ON THE UPHILL SIDE OF PLANT BASINS.

IRRIGATION SPRINKLER SCHEDULE

SYMBOL	TYPE	DESCRIPTION	SPRAY PATTERN	OPERATING PRESSURE	PRESSURE COMPENSATING	GALLONS PER MINUTE (GPM)	GALLONS PER HOUR (GPH)	MATERIAL	INLET CONNECTION (NPT INCH)	RISER			IRRIGATION EMITTERS PER PLANT	REMARKS
										TYPE	MATERIAL			
											PLASTIC	SIZE (IPS INCH)		
◯	C-2	TREE RISER SPRINKLER ASSEMBLY	F	20-90	YES	0.25	15	PL	½"	V	X	½"	2 SPRINKLER RISER ASSEMBLIES PER PRUNUS SERRULATA 'KWANZAN', CERCIS OCCIDENTALIS, AND X CHITALPA TASHKENTENSIS 'PINK CLOUD'	(1)
◯	C-2	TREE RISER SPRINKLER ASSEMBLY	F	20-90	YES	0.25	15	PL	½"	V	X	½"	3 SPRINKLER RISER ASSEMBLIES FOR QUERCUS CHRYSOLEPIS AND QUERCUS WISLIZENI	(1)
×	C-2	GROUNDCOVER RISER SPRINKLER ASSEMBLY	F	20-90	YES	0.25	15	PL	½"	V	X	½"	1 SPRINKLER RISER ASSEMBLY PER PLANT	(1)

PLASTIC PIPE SIZING (LATERAL)

PLASTIC PIPE		PIPE SIZE	GPM	No. OF SPRINKLERS (EA)
SCH 40	CL 315			
✓		1"	0-12	48
✓		1-1/2"	13-30	120
	✓	2"	31-45	180
	✓	2-1/2"	46-70	280

IRRIGATION SPRINKER SCHEDULE

ISS-1

CALCULATED-DESIGNED BY	DANIEL BLAIR	REVISED BY	JC	DB	
CHECKED BY	GEORGE STRNAD	DATE REVISED	12-22-21	02-28-23	

CONSULTANT FUNCTIONAL SUPERVISOR: HOWARD MICHAEL

STATE OF CALIFORNIA - DEPARTMENT OF TRANSPORTATION — Caltrans

LAST REVISION 12-22-21 — DATE PLOTTED => $DATE — TIME PLOTTED => $TIME

BORDER LAST REVISED 8/1/2016 | USERNAME =>$USER | DGN FILE => $REQUEST | RELATIVE BORDER SCALE IS IN INCHES 0 1 2 3 | UNIT 0703 | PROJECT NUMBER & PHASE 04000007591

Dist	COUNTY	ROUTE	POST MILES TOTAL PROJECT	SHEET No.	TOTAL SHEETS
04	SM	101	0.8/1.1	76	136

REGISTERED LANDSCAPE ARCHITECT 9-15-22 DATE

9-30-22
PLANS APPROVAL DATE

LICENSED LANDSCAPE ARCHITECT JIRI GEORGE STRNAD, NO. LA 4296 SIGNATURE 12-31-24 EXPIRATION DATE 4-27-22 DATE STATE OF CALIFORNIA

THE STATE OF CALIFORNIA OR ITS OFFICERS OR AGENTS SHALL NOT BE RESPONSIBLE FOR THE ACCURACY OR COMPLETENESS OF SCANNED COPIES OF THIS PLAN SHEET.

AECOM
4 N. Second St
Suite 675
San Jose, CA 95113

CITY OF EAST PALO ALTO
1960 TATE STREET
EAST PALO ALTO, CA 94303

NOTES:

1. FOR ACCURATE RIGHT OF WAY DATA, CONTACT RIGHT OF WAY ENGINEERING AT THE DISTRICT OFFICE.
2. FIELD VERIFY EXISTING IRRIGATION AND PLANTING LIMITS AND SITE CONDITIONS.
3. EXISTING IRRIGATION WITHIN LIMITS OF CONSTRUCTION SHALL BE REMOVED. LATERAL LINES SHALL BE CAPPED AND THE REST OF THE IRRIGATION SYSTEM SHALL REMAIN FULLY FUNCTIONAL AND MAINTAINED THROUGHOUT THE CONSTRUCTION PEROID.
4. ALL EXISTING IRRIGATION EQUIPMENT AND PIPING OUTSIDE OF THE CONSTRUCTION LIMITS SHALL REMAIN AND SHALL BE PROTECTED IN PLACE.
5. EXISTING IRRIGATION IS SHOWN FOR CLARITY. CONTRACTOR SHALL FIELD VERIFY LOCATIONS BEFORE BEGINNING WORK.
6. REPLACE ANY IRRIGATION COMPONENTS DAMAGED DURING CONSTRUCTION IMMEDIATELY AT NO ADDITIONAL COST TO CITY. EXISTING IRRIGATION SYSTEM SHALL REMAIN FULLY FUCTIONAL AT ALL TIMES DURING THE CONSTRUCTION PERIOD. ANY PLANTS OUTSIDE OF THE CONSTRUCTION LIMITS THAT DIE DURING THE CONSTRUCTION PERIOD SHALL BE REPLACED IN KIND BY THE CONTRACTOR AT NO ADDITIONAL COST TO CITY.
7. THE LOCATION OF THE EXISTING IRRIGATION MAIN IS SHOWN DIAGRAMMATICALLY ON THIS DRAWING. CONTRACTOR SHALL ACCURATELY LOCATE THE IRRIGATION MAIN AND PROTECT IT DURING CONSTRUCTION.

LEGEND:

- 4-FOOT HIGH ORANGE SNOW FENCE ATTACHED TO #4 REBARS AT 10'-0" O.C., PROVIDE ORANGE PROTECTIVE CAPS FOR REBAR ENDS.
- CONSTRUCTION LIMITS
- EXISTING IRRIGATION PIPE AND OTHER COMPONENTS TO REMAIN AND TO BE PROTECTED IN PLACE.
- EXISTING IRRIGATION PIPE AND OTHER IRRIGATION COMPONENTS TO BE REMOVED.

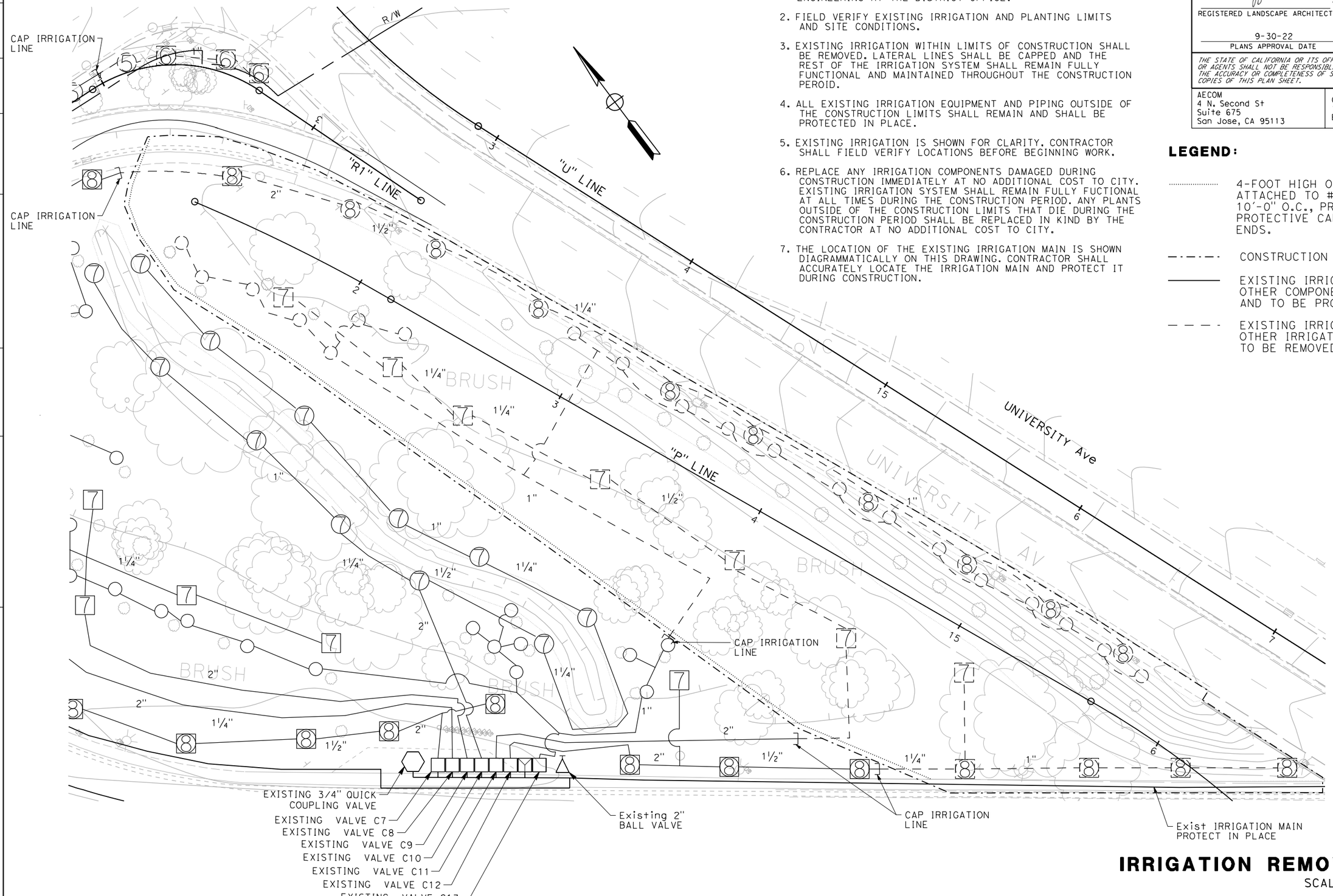

IRRIGATION REMOVAL PLAN

SCALE 1" = 20'

IR-1

APPROVED FOR IRRIGATION WORK ONLY

STATE OF CALIFORNIA - DEPARTMENT OF TRANSPORTATION
Caltrans

FUNCTIONAL SUPERVISOR: HOWARD MICHAEL
CALCULATED-DESIGNED BY: GEORGE STRNAD
CHECKED BY: DANIEL HO
REVISED BY: DB
DATE REVISED: 9-15-22

LAST REVISION 9-15-22
DATE PLOTTED => 10/27/2022
TIME PLOTTED => 12:00:07 PM

NOTES:
1. ALL NEW IRRIGATION SHALL BE INSTALLED WITHIN THE CONSTRUCTION LIMITS.

Dist	COUNTY	ROUTE	POST MILES TOTAL PROJECT	SHEET No.	TOTAL SHEETS
04	SM	101	0.8/1.1	77	136

REGISTERED LANDSCAPE ARCHITECT — DATE 02/28/2023

9-30-2022
PLANS APPROVAL DATE

LICENSED LANDSCAPE ARCHITECT — JIRI GEORGE STRNAD, NO. LA 4296 — SIGNATURE — EXPIRATION DATE 12-31-24 — DATE 02-28-23 — STATE OF CALIFORNIA

THE STATE OF CALIFORNIA OR ITS OFFICERS OR AGENTS SHALL NOT BE RESPONSIBLE FOR THE ACCURACY OR COMPLETENESS OF SCANNED COPIES OF THIS PLAN SHEET.

AECOM
4 N. SECOND St
SUITE 675
SAN JOSE, CA 95113

CITY OF EAST PALO ALTO
1960 TATE STREET
EAST PALO ALTO, CA 94303

LEGEND

SYMBOL	DESCRIPTION
- - - - - - - - - -	TREE BUBBLER LATERAL IRRIGATION LINES
———	GROUNDCOVER LATERAL IRRIGATION LINES WITHOUT BUBBLERS
—x—x—x—	GROUNDCOVER LATERAL IRRIGATION LINES WITH BUBBLERS
—— ——	GROUNDCOVER BOUNDARY

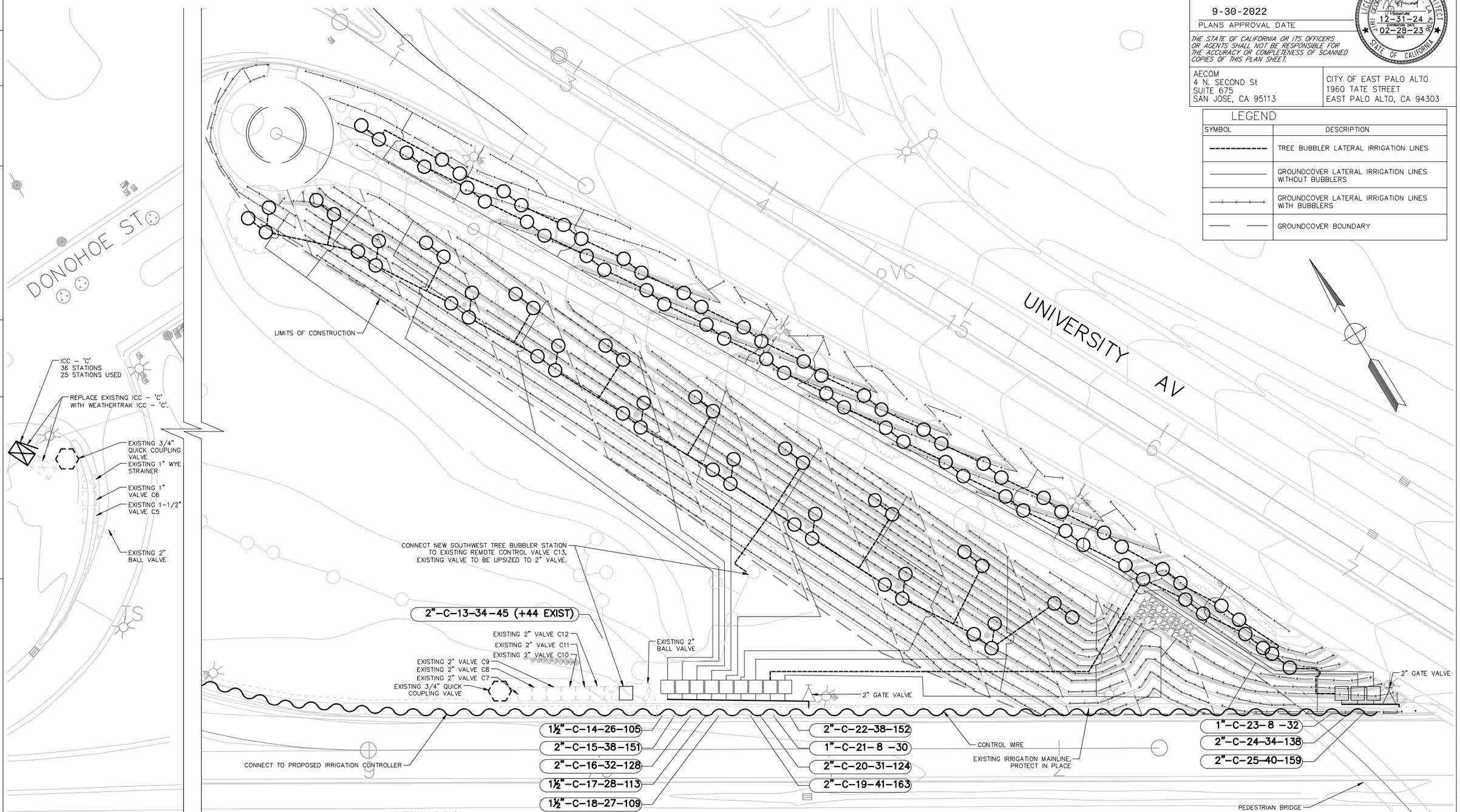

IRRIGATION PLAN

SCALE 1" = 20'

IP-1

STATE OF CALIFORNIA – DEPARTMENT OF TRANSPORTATION
Caltrans

CONSULTANT FUNCTIONAL SUPERVISOR: HOWARD MICHAEL
CALCULATED-DESIGNED BY: DANIEL BLAIR
CHECKED BY: GEORGE STRNAD
REVISED BY: JC
DATE REVISED: 12-22-21

DATE PLOTTED => $DATE
TIME PLOTTED => $TIME
LAST REVISION 12-22-21

Dist	COUNTY	ROUTE	POST MILES TOTAL PROJECT	SHEET No.	TOTAL SHEETS
04	SM	101	0.8/1.1	78	136

REGISTERED LANDSCAPE ARCHITECT — DATE 02/28/2023

9-30-2022
PLANS APPROVAL DATE

LICENSED LANDSCAPE ARCHITECT — JIRI GEORGE STRNAD, NO. LA 4296 — SIGNATURE — EXPIRATION DATE 12-31-24 — DATE 02-28-23 — STATE OF CALIFORNIA

THE STATE OF CALIFORNIA OR ITS OFFICERS OR AGENTS SHALL NOT BE RESPONSIBLE FOR THE ACCURACY OR COMPLETENESS OF SCANNED COPIES OF THIS PLAN SHEET.

AECOM
4 N. SECOND St
SUITE 675
SAN JOSE, CA 95113

CITY OF EAST PALO ALTO
1960 TATE STREET
EAST PALO ALTO, CA 94303

IRRIGATION QUANTITY (LATERAL SIDE OF CONTROL VALVE)

SHEET	VALVE NUMBER	IRRIGATION SUPPLY LINE: PLASTIC PIPE (SCHEDULE 40) (SUPPLY LINE) 1"	IRRIGATION SUPPLY LINE: PLASTIC PIPE (SCHEDULE 40) (SUPPLY LINE) 1-1/2"	IRRIGATION SUPPLY LINE: PLASTIC PIPE (CLASS 315) (SUPPLY LINE) 2"	CHECK VALVE	SPRINKLER ASSEMBLY
		LF				EA
IP-1	C-13 (EXISTING)	802	–	–		45
	C-14	397	392	–		105
	C-15	483	399	163		151
	C-16	202	304	131		128
	C-17	234	413	–		113
	C-18	272	454	–		109
	C-19	184	330	265		163
	C-20	226	345	142		124
	C-21	618	–	–		30
	C-22	487	280	145		152
	C-23	503	–	–		32
	C-24	1,052	351	51		138
	C-25	1,328	95	86		159
SHEET TOTAL		5,460	3,363	983		1,449

IRRIGATION QUANTITY (MAIN SUPPLY SIDE OF CONTROL VALVE)

SHEET	PLASTIC PIPE (CLASS 315) (SUPPLY LINE) 2"	PLASTIC PIPE (CLASS 315) (SUPPLY LINE) 2-1/2"	PLASTIC PIPE (CLASS 315) (SUPPLY LINE) 3"	GATE VALVE 2"	GATE VALVE 2-1/2"	GATE VALVE 3"	REMOTE CONTROL VALVE 1"	REMOTE CONTROL VALVE 1-1/2"	REMOTE CONTROL VALVE 2"
	LF			EA			EA		
IP-1	65	–	–	2	–	–	2	3	8
SHEET TOTALS	65	–	–	2	–	–	2	3	8

IRRIGATION QUANTITIES

IQ-1

STATE OF CALIFORNIA – DEPARTMENT OF TRANSPORTATION
Caltrans

CONSULTANT FUNCTIONAL SUPERVISOR: HOWARD MICHAEL
CALCULATED-DESIGNED BY: DANIEL BLAIR
CHECKED BY: GEORGE STRNAD
REVISED BY: JC
DATE REVISED: 12-22-21

LAST REVISION 12-22-21
DATE PLOTTED => $DATE
TIME PLOTTED => $TIME

Dist	COUNTY	ROUTE	POST MILES TOTAL PROJECT	SHEET No.	TOTAL SHEETS
04	SM	101	0.8/1.1	79	136

REGISTERED LANDSCAPE ARCHITECT — 02/28/2023 DATE

9-30-2022
PLANS APPROVAL DATE

LICENSED LANDSCAPE ARCHITECT — JIRI GEORGE STRNAD — No. 6424 — Signature — 12-31-24 EXPIRATION DATE — 02-28-23 DATE — STATE OF CALIFORNIA

THE STATE OF CALIFORNIA OR ITS OFFICERS OR AGENTS SHALL NOT BE RESPONSIBLE FOR THE ACCURACY OR COMPLETENESS OF SCANNED COPIES OF THIS PLAIN SHEET.

AECOM
4 N. SECOND St
SUITE 675
SAN JOSE, CA 95113

CITY OF EAST PALO ALTO
1960 TATE STREET
EAST PALO ALTO, CA 94303

EROSION CONTROL TYPE 1

SYMBOL	SEQUENCE	ITEM	MATERIAL DESCRIPTION	MATERIAL TYPE	APPLICATION RATE	DEPTH	REMARKS
	STEP 1	WOOD CHIPS	WOOD CHIPS	FINE PARTICLES 1" OR LESS	270 CY/AC	2"	
	STEP 2	ROLLED EROSION CONTROL PRODUCT (NETTING)	NETTING	TYPE C			
	STEP 3	FIBER ROLLS	FIBER ROLL	BioD-Watl (12" x 10') COIR WATTLES	AS SHOWN ON PLANS		SEE DETAIL A THIS SHEET

NOTES: APPLICABLE WHERE CIRCLED (OR IN BRACKET)

1. SUFFICIENT TO RECEIVE ROOT BALL
2. 2X ROOT BALL WIDTH
3. REQUIRED
4. INSTALL GROUNDCOVER PLANTS IN FURROWS PER DETAILS A AND B

PLANT LEGEND

PLANT No.	SYMBOL	BOTANICAL NAME	COMMON NAME	HOLE SIZE (Dia) (INCH)	HOLE SIZE (DEPTH) (INCH)	BASIN TYPE	STAKING	④ HORIZONTAL ON CENTER SPACING (Ft)	MINIMUM PLANTING DISTANCE FROM: EDGE OF TRAVEL WAY (FEET)	EDGE OF PAVEMENT (FEET)	FENCE (FEET)	WALL (FEET)	PAVED DITCH (FEET)	EARTH DITCH (FEET)	WATER USE LEVEL	REMARKS
1		BACCHARIS PILULARIS 'Twin Peaks'	PIGEON POINT COYOTE BRUSH	②	①	II	–	96"	–	–	–	–	–	–	LOW	GROUND COVER
2		CEANOTHUS GRISEUS HORIZONTALIS 'Yankee Point'	CARMEL MOUNTAIN LILAC	②	①	II	–	96"	–	–	–	–	–	–	LOW	GROUND COVER
3		EPILOBIUM CANUM 'Calistoga'	CALIFORNIA FUCHSIA	②	①	II	–	48"	–	–	–	–	–	–	LOW	GROUND COVER
4		ERIOGONUM FASCICULATUM 'Warriner Lytle'	WARRINER LYTLE BUCKWHEAT	②	①	II	–	60"	–	–	–	–	–	–	LOW	GROUND COVER
5		SALVIA X 'Bee's Bliss'	BEE'S BLISS SAGE	②	①	II	–	72"	–	–	–	–	–	–	LOW	GROUND COVER
6		CERCIS OCCIDENTALIS	WESTERN REDBUD	②	①	II	③	–	15	5	5	5	10	10	VERY LOW	TREE
7		PRUNUS SERRULATA 'Kwanzan'	KWANZAN JAPANESE FLOWERING CHERRY	②	①	II	③	–	20	5	15	15	15	5	MEDIUM	TREE
8		QUERCUS CHRYSOLEPIS	CANYON LIVE OAK	②	①	II	③	–	20	20	20	20	20	5	VERY LOW	TREE
9		QUERCUS WISLIZENII	INTERIOR LIVE OAK	②	①	II	③	–	20	20	20	20	20	5	VERY LOW	TREE
10		X CHITALPA TASHKENTENSIS 'Pink Cloud'	PINK CLOUD CHITALPA	②	①	II	③	–	20	6	15	15	15	17	LOW	TREE

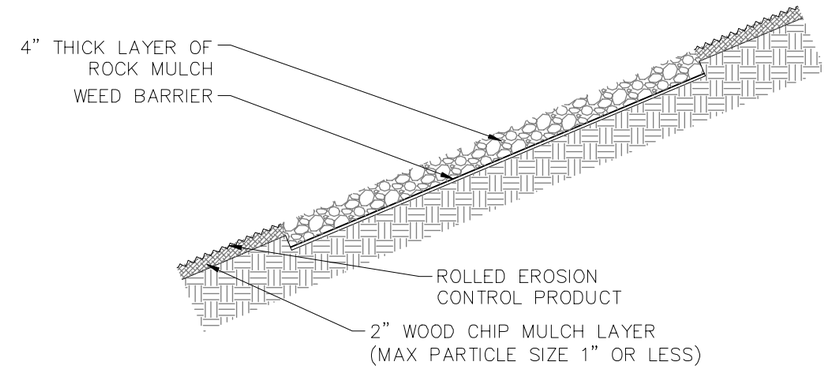

DETAIL C
ROCK MULCH

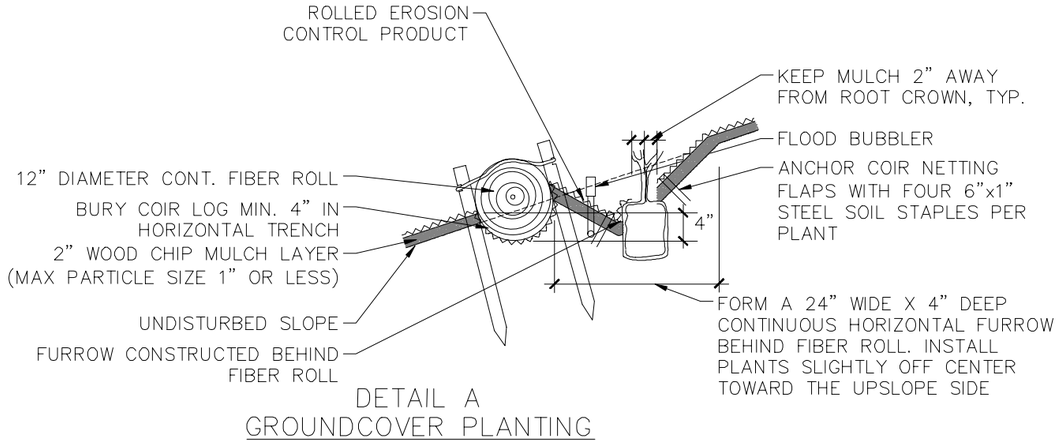

DETAIL A
GROUNDCOVER PLANTING
FURROW AT FIBER ROLL

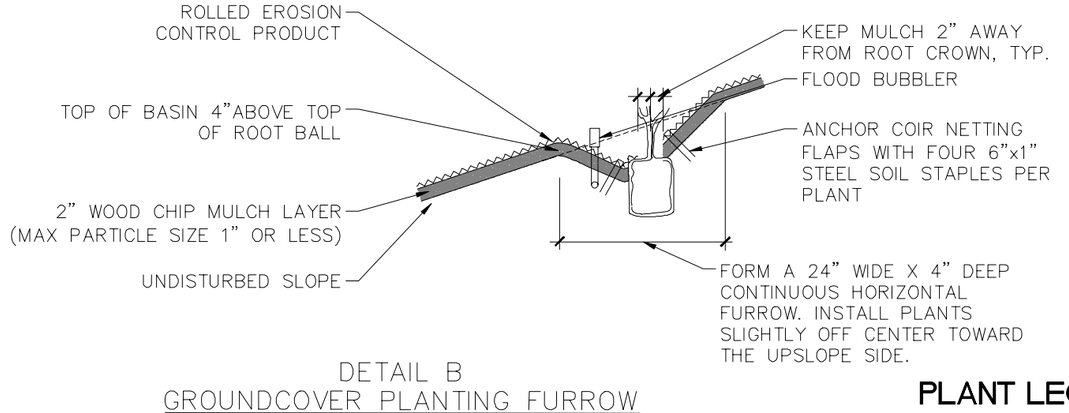

DETAIL B
GROUNDCOVER PLANTING FURROW

PLANT LEGEND

PL-1

DANIEL BLAIR — GEORGE STRNAD — DESIGNED BY / CALCULATED BY
JC — 12-22-21 — CHECKED BY
DB — 02-28-23 — REVISED BY / DATE REVISED
HOWARD MICHAEL — CONSULTANT FUNCTIONAL SUPERVISOR
STATE OF CALIFORNIA - DEPARTMENT OF TRANSPORTATION

LAST REVISION 12-22-21 — DATE PLOTTED => $DATE — TIME PLOTTED => $TIME

BORDER LAST REVISED 8/1/2016 | USERNAME =>$USER | DGN FILE => $REQUEST | RELATIVE BORDER SCALE IS IN INCHES 0 1 2 3 | UNIT 0703 | PROJECT NUMBER & PHASE 04000007591

NOTES:

1. ROOT BARRIERS TO BE PROVIDED FOR ALL TREES CLOSER THAN 10' TO CURB/PAVING WITH ROOT BARRIER EXTENDING 10' IN EACH DIRECTION FROM A POINT WHERE A PERPENDICULAR LINE FROM THE CENTER OF THE TRUNK INTERSECTS WITH THE EDGE OF THE CURB/PAVING.

Dist	COUNTY	ROUTE	POST MILES TOTAL PROJECT	SHEET No.	TOTAL SHEETS
04	SM	101	0.8/1.1	80	136

REGISTERED LANDSCAPE ARCHITECT — 02/28/2023 DATE

9-30-2022
PLANS APPROVAL DATE

LICENSED LANDSCAPE ARCHITECT — JIRI GEORGE STRNAD, NO. 4629 — SIGNATURE — 12-31-24 EXPIRATION DATE — 02-28-23 DATE — STATE OF CALIFORNIA

THE STATE OF CALIFORNIA OR ITS OFFICERS OR AGENTS SHALL NOT BE RESPONSIBLE FOR THE ACCURACY OR COMPLETENESS OF SCANNED COPIES OF THIS PLAIN SHEET.

AECOM
4 N. SECOND St
SUITE 675
SAN JOSE, CA 95113

CITY OF EAST PALO ALTO
1960 TATE STREET
EAST PALO ALTO, CA 94303

LEGEND

SYMBOL	DESCRIPTION	DETAIL
	ROLLED EROSION CONTROL PRODUCT	DETAIL A & B/PL-1
	GROUNDCOVER PLANTING FURROW AT FIBER ROLL	DETAIL A/PL-1
	GROUNDCOVER PLANTING FURROW	DETAIL B/PL-1

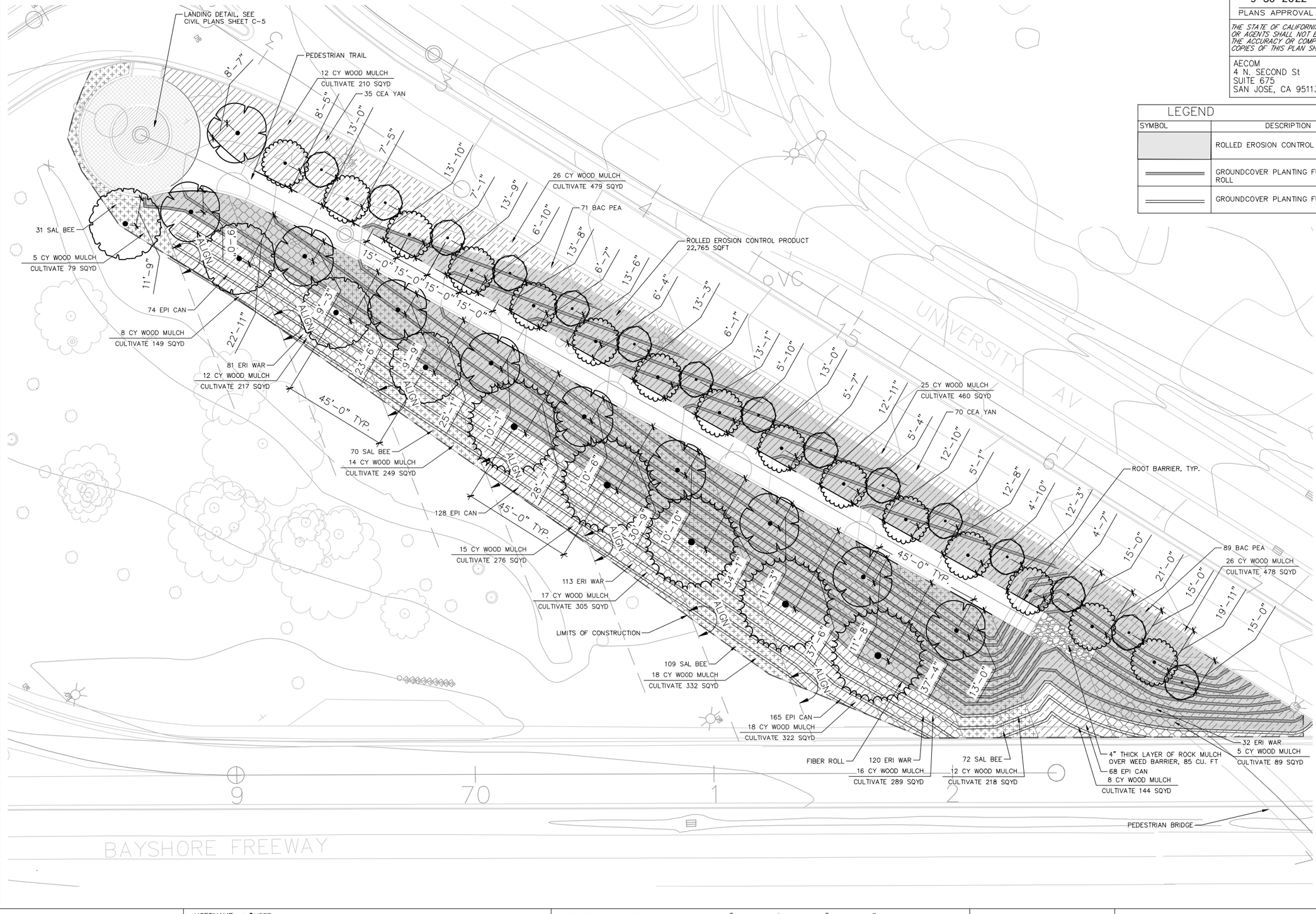

PLANTING PLAN

SCALE 1" = 20'

PP-1

CALCULATED-DESIGNED BY	CHECKED BY	DANIEL BLAIR	GEORGE STRNAD	JC	12-22-21
				REVISED BY	DATE REVISED

CONSULTANT FUNCTIONAL SUPERVISOR: HOWARD MICHAEL

STATE OF CALIFORNIA - DEPARTMENT OF TRANSPORTATION — Caltrans

LAST REVISION 12-22-21 — DATE PLOTTED => $DATE — TIME PLOTTED => $TIME

BORDER LAST REVISED 8/1/2016 | USERNAME =>$USER | DGN FILE => $REQUEST | RELATIVE BORDER SCALE IS IN INCHES 0 1 2 3 | UNIT 0703 | PROJECT NUMBER & PHASE 04000007591

Dist	COUNTY	ROUTE	POST MILES TOTAL PROJECT	SHEET No.	TOTAL SHEETS
04	SM	101	0.8/1.1	81	136

REGISTERED LANDSCAPE ARCHITECT — DATE 02/28/2023

9-30-2022
PLANS APPROVAL DATE

LICENSED LANDSCAPE ARCHITECT — JIRI GEORGE STRNAD, NO. LA 4296 — SIGNATURE — EXPIRATION DATE 12-31-24 — DATE 02-28-23 — STATE OF CALIFORNIA

THE STATE OF CALIFORNIA OR ITS OFFICERS OR AGENTS SHALL NOT BE RESPONSIBLE FOR THE ACCURACY OR COMPLETENESS OF SCANNED COPIES OF THIS PLAN SHEET.

AECOM
4 N. SECOND St
SUITE 675
SAN JOSE, CA 95113

CITY OF EAST PALO ALTO
1960 TATE STREET
EAST PALO ALTO, CA 94303

NOTES: APPLICABLE WHERE CIRCLED (OR IN BRACKET)

(1) BASIN MULCH IS INCLUDED WITH MULCH QUANTITIES SHOWN ON PLANTING PLAN.

PLANT QUANTITIES

BOTANICAL NAME	COMMON NAME	PLANT GROUP A	PLANT GROUP U	PLANT BASIN WOOD MULCH (2")	PLANT BASIN SOIL AMENDMENT	PACKET FERTILIZER	SLOW RELEASE FERTILIZER (Pit Est) (OZ)	ROCK MULCH	WEED GERMINATION	FOLIAGE PROTECTOR (TREE STAKING)	ROOT BARRIER
		EA	EA	CY	CY	EA	EA	SQFT	SQYD	EA	LF
BACCHARIS PILULARIS 'Twin Peaks'	PIGEON POINT COYOTE BRUSH	160	–	(1)	6	160	640	260	4,296	49	452
CEANOTHUS GRISEUS HORIZONTALIS 'Yankee Point'	CARMEL MOUNTAIN LILAC	105	–	(1)	4	105	420				
EPILOBIUM CANUM 'Calistoga'	CALIFORNIA FUCHSIA	436	–	(1)	16	436	1,744				
ERIOGONUM FASCICULATUM 'Warriner Lytle'	WARRINER LYTLE BUCKWHEAT	346	–	(1)	13	–	–				
SALVIA X 'Bee's Bliss'	BEE'S BLISS SAGE	292	–	(1)	1	–	–				
CERCIS OCCIDENTALIS	WESTERN REDBUD	–	15	(1)	5	120	60				
PRUNUS SERRULATA 'Kwanzan'	KWANZAN JAPANESE FLOWERING CHERRY	–	15	(1)	5	120	60				
QUERCUS CHRYSOLEPIS	CANYON LIVE OAK	–	4	(1)	1	32	16				
QUERCUS WISLIZENII	INTERIOR LIVE OAK	–	5	(1)	1	40	20				
X CHITALPA TASHKENTENSIS 'Pink Cloud'	PINK CLOUD CHITALPA	–	10	(1)	3	80	40				
	SHEET TOTALS	1,339	49	237	55	1,093	3,000	260	4,296	49	452

PLANTING QUANTITIES

PQ-1

STATE OF CALIFORNIA – DEPARTMENT OF TRANSPORTATION
Caltrans

CONSULTANT FUNCTIONAL SUPERVISOR: HOWARD MICHAEL
CALCULATED-DESIGNED BY: DANIEL BLAIR
CHECKED BY: GEORGE STRNAD
REVISED BY: JC
DATE REVISED: 12-22-21

DATE PLOTTED => $DATE
TIME PLOTTED => $TIME
LAST REVISION 12-22-21

Dist	COUNTY	ROUTE	POST MILES TOTAL PROJECT	SHEET No.	TOTAL SHEETS
04	SM	101	0.8/1.1	82	136

9-15-22
REGISTERED CIVIL ENGINEER DATE

REGISTERED PROFESSIONAL ENGINEER
DANIEL HO
No. 50914
Exp. 9-30-23
CIVIL
STATE OF CALIFORNIA

9-30-22
PLANS APPROVAL DATE

THE STATE OF CALIFORNIA OR ITS OFFICERS OR AGENTS SHALL NOT BE RESPONSIBLE FOR THE ACCURACY OR COMPLETENESS OF SCANNED COPIES OF THIS PLAN SHEET.

AECOM
4 N. SECOND St
SUITE 675
SAN JOSE, CA 95113

CITY OF EAST PALO ALTO
1960 TATE STREET
EAST PALO ALTO, CA 94303

EROSION CONTROL TYPE 1

SYMBOL	SEQUENCE	ITEM	MATERIAL		APPLICATION RATE	DEPTH	REMARKS
			DESCRIPTION	TYPE			
	STEP 1	WOOD CHIPS	WOOD CHIPS	FINE PARTICLES 1" OR LESS	270 CY/AC	2"	
	STEP 2	ROLLED EROSION CONTROL PRODUCT (NETTING)	NETTING	TYPE C			
═══	STEP 3	FIBER ROLLS	FIBER ROLL	BioD-Wat1 (12" x 10') COIR WATTLES	AS SHOWN ON PLANS		

EROSION CONTROL TYPE 2

SEQUENCE	ITEM	MATERIAL		APPLICATION RATE	DEPTH
		DESCRIPTION	TYPE		
STEP 1	COMPOST	COMPOST	FINE	135 CY/ACRE	1"
STEP 2	ROLLED EROSION CONTROL PRODUCT (NETTING)	NETTING	TYPE A		
STEP 3	HYDROSEED	SEED	MIX 1	42.3 LB/ACRE	
		FIBER	WOOD	500 LB/ACRE	
		FERTILIZER	ORGANIC	500 LB/ACRE	
STEP 4	HYDROMULCH	FIBER	WOOD	1,500 LB/ACRE	
		TACKIFIER	GUAR (PLANT BASED)	70 LB/ACRE	

EROSION CONTROL TYPE 3

SEQUENCE	ITEM	MATERIAL		APPLICATION RATE	DEPTH
		DESCRIPTION	TYPE		
STEP 1	COMPOST	COMPOST	MEDIUM	135 CY/ACRE	1"
STEP 2	HYDROSEED	SEED	MIX 1	42.3 LB/ACRE	
		FIBER	WOOD	500 LB/ACRE	
		FERTILIZER	ORGANIC	500 LB/ACRE	
STEP 3	HYDROMULCH	FIBER	WOOD	1,500 LB/ACRE	
		TACKIFIER	GUAR	125 LB/ACRE	

SEED MIX

SEED	BOTANICAL NAME (COMMON NAME)	PERCENT GERMINATION (MINIMUM)	POUNDS PURE LIVE SEED PER ACRE (SLOPE MEASUREMENT)
MIX 1	LIPINUS BICOLOR (ANNUAL LUPINE)	50	5
	BROMUS CARINATUS [1] (CALIFORNIA BROME)	60	9
	ESCHSCHOLZIA CALIFORNICA (CALIFORNIA POPPY)	60	3
	FESTUCA MICROSTACHYS (THREE-WEEK FESCUE)	60	4
	FESTUCA RUBRA VAR MOLATE (MOLATE RED FESCUE)	60	8
	HORDEUM BRACHYANTHERUM (CALIFORNIA MEADOW BARLEY)	60	11
	KOELERIA MACRANTHA (JUNEGRASS)	50	2
	SYMPHYOTRICHUM CHILENSE (PACIFIC ASTER)	40	0.2
	ACHILLEA MILLEFOLIUM (YARROW)	60	0.1

FIBER ROLLS

SEQUENCE	ITEM	MATERIAL		REMARKS
		DESCRIPTION	TYPE	
IN EC TYPES 2 AREAS FIBER ROLLS MUST BE INSTALLED AFTER RECP	FIBER ROLLS	RICE STRAW FILLED, JUTE COVERED	8" TO 10" Dia	TYPE 2 FIBER ROLLS INSTALLATION

EROSION CONTROL LEGEND

ECL-1

REVISED BY	DATE REVISED
JC	9-15-22

CALCULATED-DESIGNED BY: JOSE CORONEL
CHECKED BY: DANIEL HO
CONSULTANT FUNCTIONAL SUPERVISOR: HOWARD MICHAEL

STATE OF CALIFORNIA - DEPARTMENT OF TRANSPORTATION
Caltrans

LAST REVISION 9-15-22
DATE PLOTTED => 10/27/2022
TIME PLOTTED => 12:11:37 PM

BORDER LAST REVISED 8/1/2016
USERNAME => jose.coronel
DGN FILE => 04000007591tc001.dgn
RELATIVE BORDER SCALE IS IN INCHES 0 1 2 3
UNIT 0703
PROJECT NUMBER & PHASE 04000007591

Dist	COUNTY	ROUTE	POST MILES TOTAL PROJECT	SHEET No.	TOTAL SHEETS
04	SM	101	0.8/1.1	83	136

REGISTERED CIVIL ENGINEER — DATE 9-15-22

PLANS APPROVAL DATE 9-30-22

REGISTERED PROFESSIONAL ENGINEER — DANIEL HO — No. 50914 — Exp. 9-30-23 — CIVIL — STATE OF CALIFORNIA

THE STATE OF CALIFORNIA OR ITS OFFICERS OR AGENTS SHALL NOT BE RESPONSIBLE FOR THE ACCURACY OR COMPLETENESS OF SCANNED COPIES OF THIS PLAN SHEET.

AECOM
4 N. SECOND St
SUITE 675
SAN JOSE, CA 95113

CITY OF EAST PALO ALTO
1960 TATE STREET
EAST PALO ALTO, CA 94303

NOTES:

1. FOR ACCURATE RIGHT OF WAY DATA, CONTACT RIGHT OF WAY ENGINEERING AT THE DISTRICT OFFICE.
2. EXACT LIMITS OF WORK OR DEPLOYMENT OF EROSION CONTROL MATERIALS SHALL BE DETERMINED BY THE ENGINEER.
3. REFER TO DRAINAGE PLANS FOR BIOFILTRATION SWALES LOCATIONS AND DETAILS.

LEGEND:

- EROSION CONTROL (TYPE 1)
- EROSION CONTROL (TYPE 2)
- EROSION CONTROL (TYPE 3)
- SPECIAL MARKER
- COIR LOG
- FIBER ROLL

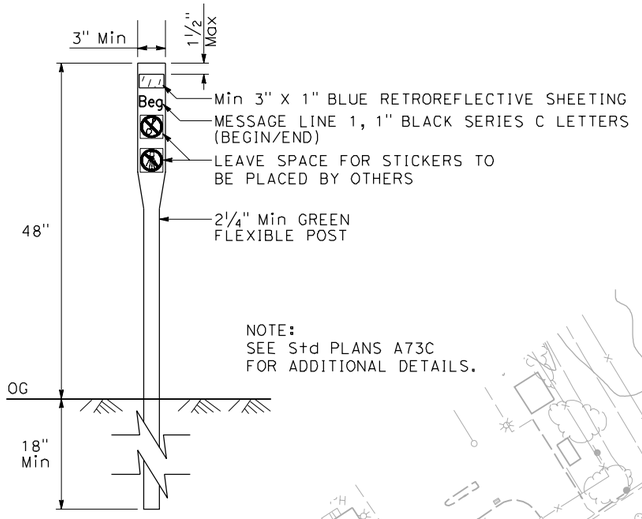

NOTE:
SEE Std PLANS A73C
FOR ADDITIONAL DETAILS.

SPECIAL MARKER DETAIL

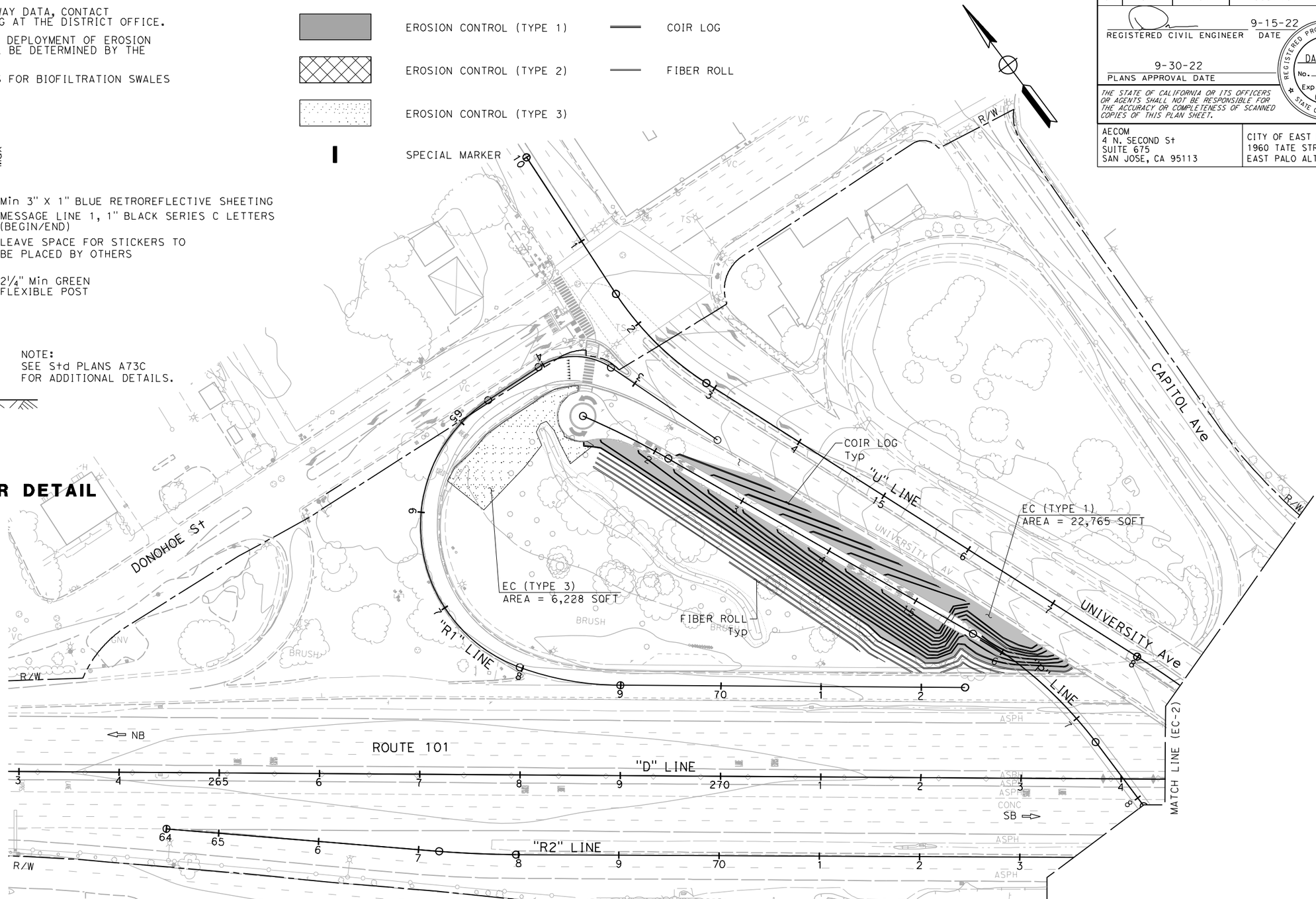

EROSION CONTROL PLAN

SCALE 1" = 50'

APPROVED FOR EROSION CONTROL WORK ONLY

EC-1

STATE OF CALIFORNIA - DEPARTMENT OF TRANSPORTATION

CONSULTANT FUNCTIONAL SUPERVISOR: HOWARD MICHAEL

CALCULATED-DESIGNED BY: JOSE CORONEL

CHECKED BY: DANIEL HO

REVISED BY: JC — DATE REVISED: 9-15-22

LAST REVISION — DATE PLOTTED => 10/27/2022 — TIME PLOTTED => 12:13:34 PM

BORDER LAST REVISED 8/1/2016 | USERNAME => jose.coronel | DGN FILE => 04000007591te001.dgn | RELATIVE BORDER SCALE IS IN INCHES 0 1 2 3 | UNIT 0703 | PROJECT NUMBER & PHASE 04000007591

Dist	COUNTY	ROUTE	POST MILES TOTAL PROJECT	SHEET No.	TOTAL SHEETS
04	SM	101	0.8/1.1	84	136

REGISTERED CIVIL ENGINEER — DATE: 9-15-22

PLANS APPROVAL DATE: 9-30-22

REGISTERED PROFESSIONAL ENGINEER — DANIEL HO — No. 50914 — Exp. 9-30-23 — CIVIL — STATE OF CALIFORNIA

THE STATE OF CALIFORNIA OR ITS OFFICERS OR AGENTS SHALL NOT BE RESPONSIBLE FOR THE ACCURACY OR COMPLETENESS OF SCANNED COPIES OF THIS PLAN SHEET.

AECOM
4 N. SECOND St
SUITE 675
SAN JOSE, CA 95113

CITY OF EAST PALO ALTO
1960 TATE STREET
EAST PALO ALTO, CA 94303

NOTE:

FOR ACCURATE RIGHT OF WAY DATA, CONTACT
RIGHT OF WAY ENGINEERING AT THE DISTRICT OFFICE.

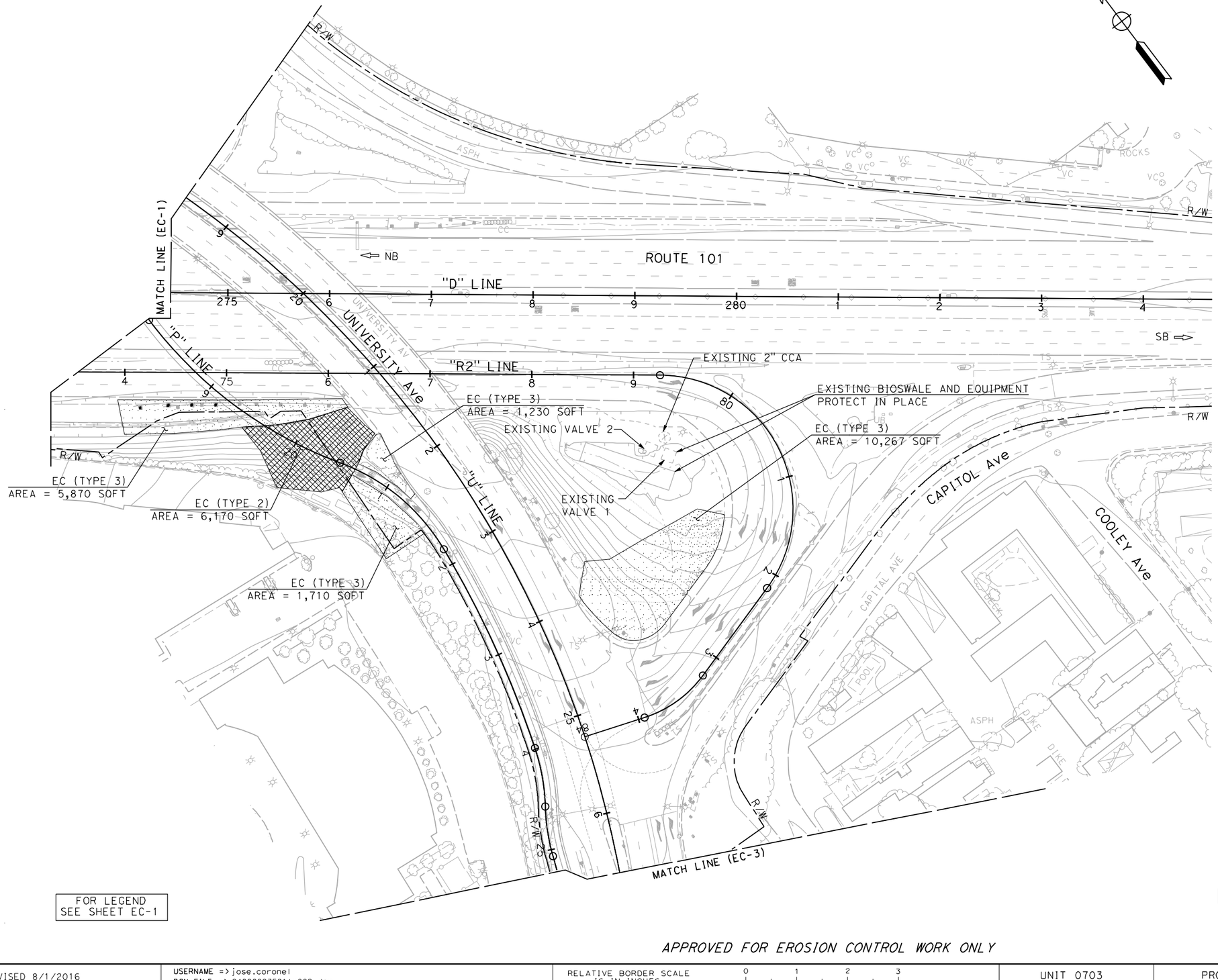

FOR LEGEND
SEE SHEET EC-1

EROSION CONTROL PLAN

SCALE 1" = 50'

APPROVED FOR EROSION CONTROL WORK ONLY

EC-2

CALCULATED-DESIGNED BY	JOSE CORONEL	
CHECKED BY	DANIEL HO	
REVISED BY	JC	
DATE REVISED	9-15-22	
CONSULTANT FUNCTIONAL SUPERVISOR	HOWARD MICHAEL	
STATE OF CALIFORNIA - DEPARTMENT OF TRANSPORTATION	Caltrans	

LAST REVISION 9-15-22
DATE PLOTTED => 10/27/2022
TIME PLOTTED => 12:14:54 PM

BORDER LAST REVISED 8/1/2016
USERNAME => jose.coronel
DGN FILE => 040000075911e002.dgn
RELATIVE BORDER SCALE IS IN INCHES 0 1 2 3
UNIT 0703
PROJECT NUMBER & PHASE 04000007591

Dist	COUNTY	ROUTE	POST MILES TOTAL PROJECT	SHEET No.	TOTAL SHEETS
04	SM	101	0.8/1.1	85	136

REGISTERED CIVIL ENGINEER — DATE 9-15-22

PLANS APPROVAL DATE 9-30-22

REGISTERED PROFESSIONAL ENGINEER — DANIEL HO No. 50914 Exp. 9-30-23 CIVIL — STATE OF CALIFORNIA

THE STATE OF CALIFORNIA OR ITS OFFICERS OR AGENTS SHALL NOT BE RESPONSIBLE FOR THE ACCURACY OR COMPLETENESS OF SCANNED COPIES OF THIS PLAN SHEET.

AECOM
4 N. SECOND St
SUITE 675
SAN JOSE, CA 95113

CITY OF EAST PALO ALTO
1960 TATE STREET
EAST PALO ALTO, CA 94303

EROSION CONTROL QUANTITIES

SHEET No.	DESCRIPTION	ROLLED EROSION CONTROL PRODUCT (NETTING)	HYDROSEED	HYDROMULCH	COIR LOG	FIBER ROLL	COMPOST	COMPOST (N)	HYDROSEED (N)			HYDROMULCH (N)	
									SEED	FIBER	FERTILIZER	FIBER	TACKIFIER
		SQFT	SQFT	SQFT	LF	LF	CY	SQFT	LB	LB	LB	LB	LB
EC-1	EC TYPE 1	22,765			4332	1808							
	EC TYPE 3		6228	6228			19	6228	6.0	71.5	6.0	214.5	17.9
EC-2	EC TYPE 2	6770	6770	6770			84	6770	6.6	77.7	6.6	233.1	10.9
	EC TYPE 3		20,317	20,317			63	20,317	19.7	233.2	19.7	699.6	58.3
GRAND TOTAL		29,535	33,315	33,315	4332	1808	166						

[N] - NOT A SEPARATE BID ITEM.

EROSION CONTROL QUANTITIES

ECQ-1

STATE OF CALIFORNIA - DEPARTMENT OF TRANSPORTATION — Caltrans

CONSULTANT FUNCTIONAL SUPERVISOR: HOWARD MICHAEL

CALCULATED-DESIGNED BY: JOSE CORONEL

CHECKED BY: DANIEL HO

REVISED BY: JC

DATE REVISED: 9-15-22

LAST REVISION 9-15-22

DATE PLOTTED => 10/27/2022
TIME PLOTTED => 12:16:16 PM

BORDER LAST REVISED 8/1/2016

USERNAME => jose.coronel
DGN FILE => 04000007591tg001.dgn

RELATIVE BORDER SCALE IS IN INCHES 0 1 2 3

UNIT 0703

PROJECT NUMBER & PHASE 04000007591

Dist	COUNTY	ROUTE	POST MILES TOTAL PROJECT	SHEET No.	TOTAL SHEETS
04	SM	101	0.8/1.1	86	136

REGISTERED CIVIL ENGINEER — DATE 7-15-22

PLANS APPROVAL DATE 9-30-22

KIN Y. CHAN No. 55391 Exp. 12-31-22 CIVIL — REGISTERED PROFESSIONAL ENGINEER — STATE OF CALIFORNIA

THE STATE OF CALIFORNIA OR ITS OFFICERS OR AGENTS SHALL NOT BE RESPONSIBLE FOR THE ACCURACY OR COMPLETENESS OF SCANNED COPIES OF THIS PLAN SHEET.

Y&C TRANSPORTATION CONSULTANTS, INC.
3250 RAMOS CIRCLE
SACRAMENTO, CA 95827

CITY OF EAST PALO ALTO
1960 TATE STREET
EAST PALO ALTO,
CA 94303

INDEX OF ELECTRICAL SYSTEMS PLANS:

ELECTRICAL SYSTEMS PLAN SHEET	DESCRIPTION
E-1 TO E-3	ELECTRICAL SYSTEMS
E-4	MODIFYING LIGHTING SYSTEMS
E-5 TO E-6	MODIFYING FIBER OPTIC CABLE SYSTEMS
E-7 TO E-9	MODIFYING SIGNAL AND LIGHTING SYSTEMS
E-10 TO E-12	LIGHTING (CITY STREET)
E-13 TO E-18	SIGNAL AND LIGHTING (CITY STREET)
E-19	RECTANGULAR RAPID FLASHING BEACON SYSTEM (CITY)
ED-1 TO ED-4	ELECTRICAL SYSTEMS DETAILS
EQ-1 TO EQ-2	ELECTRICAL SYSTEMS QUANTITIES

ABBREVIATIONS:

AWG	AMERICAN WIRE GAUGE
HCC	HYBRID CAMERA CABLE
PG&E	PACIFIC GAS AND ELECTRIC COMPANY
RRFB	RECTANGULAR RAPID FLASHING BEACON

LEGEND:

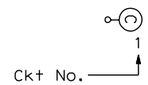

PEDESTRIAN TEAR DROP LIGHT WITH 51 W LED LUMINAIRE
(HOLOPHANE MODEL No. MSPL2-P30-40K-AS-S-B-4-P5-PCS-BHDF13-200-BK) ON 13' DECORATIVE POLE
(HOLOPHANE MODEL No. NY13/20CISU734D, AFCABKH, BHC24/1/BOU3820, FGIUS, AB-31-4 RFD170122),
OR APPROVED EQUAL. INSTALL CALTRANS TYPE 15 FOUNDATION PER MANUFACTURER RECOMMENDATION.

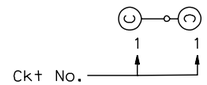

DUAL HEAD STREET/PEDESTRIAN TEAR DROP LIGHT INCLUDING 118 W LED LUMINAIRE
(HOLOPHANE MODEL No. MPL2-P30S-40K-AS-BK-TG-3-S-P5-PCLL-BHDF13-200-BK), 27 W LED PEDESTRIAN LUMINAIRE
(HOLOPHANE MODEL No. MSPL2-P10-40K-AS-S-B-4-P5-PCS-BHDF13-200-BK), AND 22'-10" DECORATIVE POLE
(HOLOPHANE MODEL No. NY23/20CISU735D, WLC72/1, BHC24/1, (2)BBD24, FGIUS, AB-31-4 RFD170123),
OR APPROVED EQUAL. INSTALL CALTRANS TYPE 15D FOUNDATION PER MANUFACTURER RECOMMENDATION.

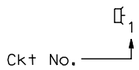

5 W LED LIGHT BOLLARD (B-K LIGHTING MODEL No. BS-LED-e102-A9-BLA-B-BLP-30-T) OR APPROVED EQUAL.
SEE STRUCTURE PLANS FOR INSTALLATION DETAILS.

RRFB AASEMBLY

J — NEMA 4 JUNCTION BOX, 12"L x 6"W x 4"D. SEE SHEET 13 STRUCTURE PLAN FOR JUNCTION BOX INSTALLATION DETAILS.

NOTES:

1. INSTALL TRACE WIRES FOR ALL NEW CALTRANS CONDUITS PER CALTRANS STANDARD SPECIFICATIONS.
2. THE CONTRACTOR MUST COMPLY WITH THE SIGN PLANS FOR SIGNS MOUNTED ON SIGNAL AND LIGHTING STANDARDS AND MAST ARMS.
3. ALL CALTRANS TRAFFIC RATED PULL BOXES MUST BE WELDED AS SHOWN ON SHEET ED-1.

ELECTRICAL SYSTEMS

INDEX OF ELECTRICAL SYSTEMS PLANS, NOTES, ABBREVIATIONS AND LEGEND

E-1

REVISED BY	DATE REVISED
MY	07-15-22

MENG YANG — CALCULATED-DESIGNED BY
KIN Y. CHAN — CHECKED BY
DAN K. YAU — CONSULTANT FUNCTIONAL SUPERVISOR

STATE OF CALIFORNIA - DEPARTMENT OF TRANSPORTATION — Caltrans®

LAST REVISION 07-15-22
DATE PLOTTED => 7/6/2022
TIME PLOTTED => 3:50:02 PM

BORDER LAST REVISED 7/2/2010
USERNAME => myang
DGN FILE => E-1 NOTES
RELATIVE BORDER SCALE IS IN INCHES 0 1 2 3
UNIT 0703
PROJECT NUMBER & PHASE 04000007591

Dist	COUNTY	ROUTE	POST MILES TOTAL PROJECT	SHEET No.	TOTAL SHEETS
04	SM	101	0.8/1.1	87	136

REGISTERED CIVIL ENGINEER — DATE 7-15-22

PLANS APPROVAL DATE 9-30-22

REGISTERED PROFESSIONAL ENGINEER — KIN Y. CHAN — No. 55391 — Exp. 12-31-22 — CIVIL — STATE OF CALIFORNIA

THE STATE OF CALIFORNIA OR ITS OFFICERS OR AGENTS SHALL NOT BE RESPONSIBLE FOR THE ACCURACY OR COMPLETENESS OF SCANNED COPIES OF THIS PLAN SHEET.

Y&C TRANSPORTATION CONSULTANTS, INC.
3250 RAMOS CIRCLE
SACRAMENTO, CA 95827

CITY OF EAST PALO ALTO
1960 TATE STREET
EAST PALO ALTO,
CA 94303

LEGEND: (FOR SHEETS E-4 TO E-19)

1 Exist MODEL 170E CONTROLLER ASSEMBLY IN MODEL 332 CABINET.

2 Exist MODEL 2070 CONTROLLER ASSEMBLY IN MODEL 332 CABINET.

3 Exist 2"C, 2#6 (240 V Ltg), 2#6 (120 V SIGNAL), 2#6 (120 V TOS CABINET), 2#8 (120 V IISNS). [RC] 2#8 (120 V IISNS).

4 Exist 2"C, 2#6 (240 V Ltg).

5 Exist 3"C, 3 HCC.

6 Exist 3"C, 1 HCC.
Exist 2"C, 2#6 (120 V TOS CABINET).

7 [RL] Exist SMART CORRIDOR CAMERA TO NEW SMA AS SHOWN ON E-7.

8 Exist 2-3"C, 3 HCC. [RC] 3 HCC. ADD 3 HCC.

9 Exist SMART CORRIDOR CAMERA STATION IN MODEL 334T CABINET.

10 Exist 3"C, 1 HCC. [RC] 1 HCC. ADD 1 HCC.

11 Exist 1½"C, 2#6 (120 V TOS CABINET).

12 Exist 2"C, 2#6 (240 V Ltg), 2#6 (120 V SIGNAL), 2#8 (120 V IISNS), 2#14 (120 V SIGN TEST SWITCH). [RC] 2#8 (120 V IISNS).

13 2"C, 8 DLC.

14 2"C, 2#6 (240 V SOFFIT), 2 DLC, 1 SIC.

15 Exist 1½"C, 2#6, 1 SIC. [RC] 2#6, 1 SIC. ADD 2#4 (240 V Ltg Ckt 1), 1 SIC.

16 Exist 3"C, 2 HCC. [RC] 2 HCC. ADD 2 HCC.

17 Exist 1½"C, 2#6 (240 V Ltg).

18 2"C, 2 DLC.

19 Exist 1½"C, 2 DLC, 1 SIC.

20 Exist 2"C, 3 DLC, 1 SIC.

21 INSTALL TYPE 15TS STANDARD WITH 12' LMA AND Rdwy 11 LED Lum. INSTALL NEMA 3R ENCLOSURE WITH RRFB CONTROLLER ASSEMBLY, RRFB LED LIGHT BAR, APS AND SIGNS. SEE DETAIL A ON SHEET ED-4.

22 Exist 2½"C, 6 DLC, 1 SIC, 12 LOOP WIRES.

23 Exist 2"C, 2#6 (120 V SIGNAL), 2#8 (240 V Ltg), 2#10 (120 V IISNS), 3#14 (PEU).

24 [RC] Exist PULL BOX. INSTALL NEW PULL BOX AS INDICATED.

25 [RL] Exist VIDEO DETECTION CAMERA TO NEW SMA AS SHOWN ON SHEET E-17.

26 2"C TYPE 1, 3#4 (120 V Ltg Ckt 2 AND Ckt 3).

27 INSTALL TYPE 1 CONDUIT IN STRUCTURE. SEE STRUCTURE PLANS FOR DETAILS.

28 ½"C TYPE 1, 2#12 (120 V Ltg).

29 2"C, 2#6 (240 V SOFFIT), 4 DLC, 1 SIC.

30 INSTALL 5 W LED BOLLARD LIGHT AT 14' SPACING. SEE STRUCTURE PLANS FOR INSTALLATION DETAILS.

31 INSTALL NEMA 4 JUNCTION BOX. SEE STRUCTURE PLANS FOR DETAILS.

32 INSTALL 4-SECTION VEHICLE SIGNAL HEAD. SEE DETAIL A ON SHEET E-8.

33 Exist 2"C, 2 DLC. [RC] 2 DLC. ADD 2 DLC.

34 Exist 1½"C, 4 DLC.

35 2"C, 2#6 (240 V SOFFIT), 1 SIC.

36 Exist 1½"C, 2#8 (240 V SOFFIT).

37 Exist 2"C, 2 DLC.

38 Exist 2"C, ONE 12-STRAND SMFO CABLE AND ONE 72-STRAND SMFO CABLE. [RC] ONE 12-STRAND SMFO CABLE. ADD ONE 12-STRAND SMFO CABLE. REINSTALL Exist ONE 72-STRAND SMFO CABLE TO NEW CONDUIT AS INDICATED ON THE PLAN.

39 Exist 3"C, 2 HCC.

40 RECONNECT THIS Exist STREET LIGHT TO CITY SYSTEM AS INDICATED.

41 2"C, 2#4 (120 V Ltg Ckt 2).

42 2"C, 2#4 (120 V Ltg Ckt 2 AND Ckt 3).

43 Exist 2"C, 4 DLC. [RC] 4 DLC. ADD 4 DLC.

44 Exist 2"C, ONE 12-STRAND SMFO CABLE. [RC] ONE 12-STRAND SMFO CABLE. ADD ONE 12-STRAND SMFO CABLE.

45 Exist 3"C, ONE 12-STRAND SMFO CABLE. [RC] ONE 12-STRAND SMFO CABLE. ADD ONE 12-STRAND SMFO CABLE.

46 2"C, 2#4 (240 V Ltg Ckt 1), 3#4 (120 V Ltg Ckt 2 AND Ckt 3).

47 2"C, 2#4 (240 V Ltg Ckt 1).

48 SPLICE SOFFIT Ltg CONDUCTORS TO INTERSECTION Ltg Ckt.

49 SEE SHEET E-10 FOR CONTINUATION.

50 Exist 1½"C, 2#6, 1 SIC, ONE 12-STRAND SMFO CABLE. [RC] 2#6, 1 SIC, ONE 12-STRAND SMFO CABLE. ADD 2#4 (240 V Ltg Ckt 1), 1 SIC, ONE 12-STRAND SMFO CABLE.

51 Exist CONDUIT(S) AND CONDUCTORS TO REMAIN.

52 [AB] 2"C, 2#6 (240 V Ltg), 2#14 (120 V TEST SWITCH).

53 Exist 2"C, 1 SIC. [RC] 1 SIC. ADD 1 SIC FROM CONTROLLER CABINET AT THIS INTERSECTION TO CONTROLLER CABINET AT WOODLAND Ave AND MANHATTAN Ave INTERSECTION (±450' TO WEST).

54 Exist 2"C, 1 SIC.

55 REPROGRAM VIDEO DETECTION ZONES AS SHOWN.

56 Exist 2"C, 2#6 (120 V SIGNAL), 2#6 (120 V TOS CABINET), 2#8 (240 V Ltg), 3#14 (PEU). ADD 2#8 (120 V RRFB).

57 Exist 2"C, 2#6 (120 V SIGNAL), 2#8 (240 V Ltg), 2#10 (120 V IISNS), 3#14 (PEU). [RC] 2#8 (Ltg). ADD 2#4 (240 V Ltg Ckt 1), 3#4 (120 V Ltg Ckt 2 AND Ckt 3).

58 Exist 2"C, 3 DLC. [RC] 3 DLC. ADD 3 DLC.

59 2"C, 4 DLC.

60 Exist 1½"C, 1 SIC. [RC] 1 SIC. ADD 1 SIC.

61 Exist 2½"C, 7 DLC, 1 SIC

62 Exist 1½"C, 2#6 (240 V SOFFIT), 1 SIC, ONE 12-STRAND SMFO CABLE. [RC] 1 SIC, ONE 12-STRAND SMFO CABLE. ADD 2#4 (240 V Ltg Ckt 1), 1 SIC, ONE 12-STRAND SMFO CABLE.

63 SEE DETAIL A ON SHEET E-11 FOR POLE LOCATION.

64 SEE DETAIL B ON SHEET E-11 FOR POLE LOCATION.

65 [RC] Exist PULL BOX. INSTALL NEW No. 5 PULL BOX.

66 Exist 2"C, 5 DLC.

67 2"C, 2#8 (240 V Ltg), 2#8 (120 V RRFB).

68 INSTALL TYPE 15-FBS FIXED BASE STANDARD WITH RRFB LED LIGHT BAR, APS AND SIGNS. SEE DETAIL B ON SHEET ED-4.

69 2"C, 2#8 (240 V Ltg), 2#8 (120 V RRFB), 1 RRFB LED LIGHT BAR CABLE, 1 RRFB APS CABLE.

70 INSTALL TYPE 15-FBS STANDARD WITH RRFB LED LIGHT BAR AND SIGNS. SEE DETAIL C ON SHEET ED-4.

71 1½"C, 1 RRFB LED LIGHT BAR CABLE.

72 1½"C, 2 RRFB LED LIGHT BAR CABLES.

ELECTRICAL SYSTEMS

E-2

REVISED BY	MY	DATE REVISED	07-15-22
CALCULATED-DESIGNED BY	MENG YANG		
CHECKED BY	KIN Y. CHAN		
CONSULTANT FUNCTIONAL SUPERVISOR	DAN K. YAU		

STATE OF CALIFORNIA - DEPARTMENT OF TRANSPORTATION — Caltrans

LAST REVISION 07-15-22 — DATE PLOTTED => 7/6/2022 — TIME PLOTTED => 3:50:04 PM

BORDER LAST REVISED 7/2/2010 — USERNAME => myang — DGN FILE => E-2 LEGEND — RELATIVE BORDER SCALE IS IN INCHES 0 1 2 3 — UNIT 0703 — PROJECT NUMBER & PHASE 04000007591

Dist	COUNTY	ROUTE	POST MILES TOTAL PROJECT	SHEET No.	TOTAL SHEETS
04	SM	101	0.8/1.1	88	136

REGISTERED CIVIL ENGINEER — 7-15-22 DATE

9-30-22
PLANS APPROVAL DATE

KIN Y. CHAN No. 55391 Exp. 12-31-22 CIVIL — REGISTERED PROFESSIONAL ENGINEER — STATE OF CALIFORNIA

THE STATE OF CALIFORNIA OR ITS OFFICERS OR AGENTS SHALL NOT BE RESPONSIBLE FOR THE ACCURACY OR COMPLETENESS OF SCANNED COPIES OF THIS PLAN SHEET.

Y&C TRANSPORTATION CONSULTANTS, INC.
3250 RAMOS CIRCLE
SACRAMENTO, CA 95827

CITY OF EAST PALO ALTO
1960 TATE STREET
EAST PALO ALTO,
CA 94303

LEGEND: (FOR SHEETS E-4 TO E-19)

[73] Exist 2-1" INNERDUCTS IN 2"C, ONE 72-STRAND SMFO CABLE TO FIBER OPTIC CABINET TSC053 AT UNIVERSITY Ave AND BAY Rd INTERSECTION.

[74] PULL OUT Exist ONE 72-STRAND SMFO CABLE FROM FIBER OPTIC CABINET TSC057 TO THIS FIBER OPTIC SPLICE VAULT. REINSTALL ONE 72-STRAND SMFO CABLE IN NEW AND EXISTING CONDUITS AS INDICATED ON THE PLAN.

[75] Exist 2"C, ONE 12-STRAND SMFO CABLE AND ONE 72-STRAND SMFO CABLE. PULL OUT AND REINSTALL Exist ONE 72-STRAND SMFO CABLE AS INDICATED ON THE PLAN.

[76] Exist 2-1" INNERDUCTS IN 2"C, ONE 72-STRAND SMFO CABLE. PULL OUT AND REINSTALL Exist ONE 72-STRAND SMFO CABLE AS INDICATED ON THE PLAN.

[77] 4-1½"C, ONE 12-STRAND SMFO CABLE, REINSTALL Exist ONE 72-STRAND SMFO CABLE TO NEW CONDUIT AS INDICATED ON THE PLAN. SEE TRENCH DETAIL ON SHEET ED-3.

[78] Exist 3"C, ONE 12-STRAND SMFO CABLE.

[79] INSTALL FIBER OPTIC PULL BOX. SEE SHEET ED-2 FOR DETAILS.

[80] 4-1½"C, ONE 12-STRAND SMFO CABLE. SEE TRENCH DETAIL ON SHEET ED-3.

[81] ADD ONE 30 A, 1P, 120 V CB WITH NAMEPLATE "LIGHTING 2" TO Exist SERVICE EQUIPMENT ENCLOSURE FOR Ltg Ckt 2. ADD ONE 30 A, 1P, 120 V CB WITH NAMEPLATE "LIGHTING 3" TO Exist SERVICE EQUIPMENT ENCLOSURE FOR Ltg Ckt 3.

[82] Exist 2"C, 2 DLC. ADD 12 LOOP WIRES.

[83] ADD 20 A, 1P, 120 V CB WITH NAMEPLATE "RRFB" TO Exist SERVICE EQUIPMENT ENCLOSURE FOR RRFB.

[84] 3"C, 2#6 (240 V SOFFIT), 8 DLC, 1 SIC.

[85] Exist 1½"C, 2#6 (240 V Ltg), 2#14 (120 V TEST SWITCH).

[86] 2"C, 2#6 (240 V Ltg), 2#14 (120 V TEST SWITCH).

[87] 2"C, 2#6 (240 V Ltg).

[88] [RL] Exist IISNS TO NEW SMA AS SHOWN ON SHEET E-17.

[89] Exist 2"C, ONE 12-STRAND SMFO CABLE.

[90] Exist 1½"C, 2 DLC. ADD 8 LOOP WIRES.

[91] [RC] Exist PBA. REPAIR THE HOLES ON Exist STANDARD.

REVISED BY	DATE REVISED
MY	07-15-22

CALCULATED-DESIGNED BY: MENG YANG
CHECKED BY: KIN Y. CHAN
CONSULTANT FUNCTIONAL SUPERVISOR: DAN K. YAU

STATE OF CALIFORNIA - DEPARTMENT OF TRANSPORTATION
Caltrans

ELECTRICAL SYSTEMS

E-3

LAST REVISION 07-15-22 | DATE PLOTTED => 7/6/2022 | TIME PLOTTED => 3:50:06 PM

BORDER LAST REVISED 7/2/2010 | USERNAME => myang | DGN FILE => E-3 LEGEND | RELATIVE BORDER SCALE IS IN INCHES 0 1 2 3 | UNIT 0703 | PROJECT NUMBER & PHASE 04000007591

Dist	COUNTY	ROUTE	POST MILES TOTAL PROJECT	SHEET No.	TOTAL SHEETS
04	SM	101	0.8/1.1	89	136

REGISTERED CIVIL ENGINEER — DATE 7-15-22

PLANS APPROVAL DATE 9-30-22

KIN Y. CHAN No. 55391 Exp. 12-31-22 CIVIL — REGISTERED PROFESSIONAL ENGINEER — STATE OF CALIFORNIA

THE STATE OF CALIFORNIA OR ITS OFFICERS OR AGENTS SHALL NOT BE RESPONSIBLE FOR THE ACCURACY OR COMPLETENESS OF SCANNED COPIES OF THIS PLAN SHEET.

Y&C TRANSPORTATION CONSULTANTS, INC.
3250 RAMOS CIRCLE
SACRAMENTO, CA 95827

CITY OF EAST PALO ALTO
1960 TATE STREET
EAST PALO ALTO,
CA 94303

NOTE:

FOR ACCURATE RIGHT OF WAY DATA, CONTACT RIGHT OF WAY ENGINEERING AT THE DISTRICT OFFICE.

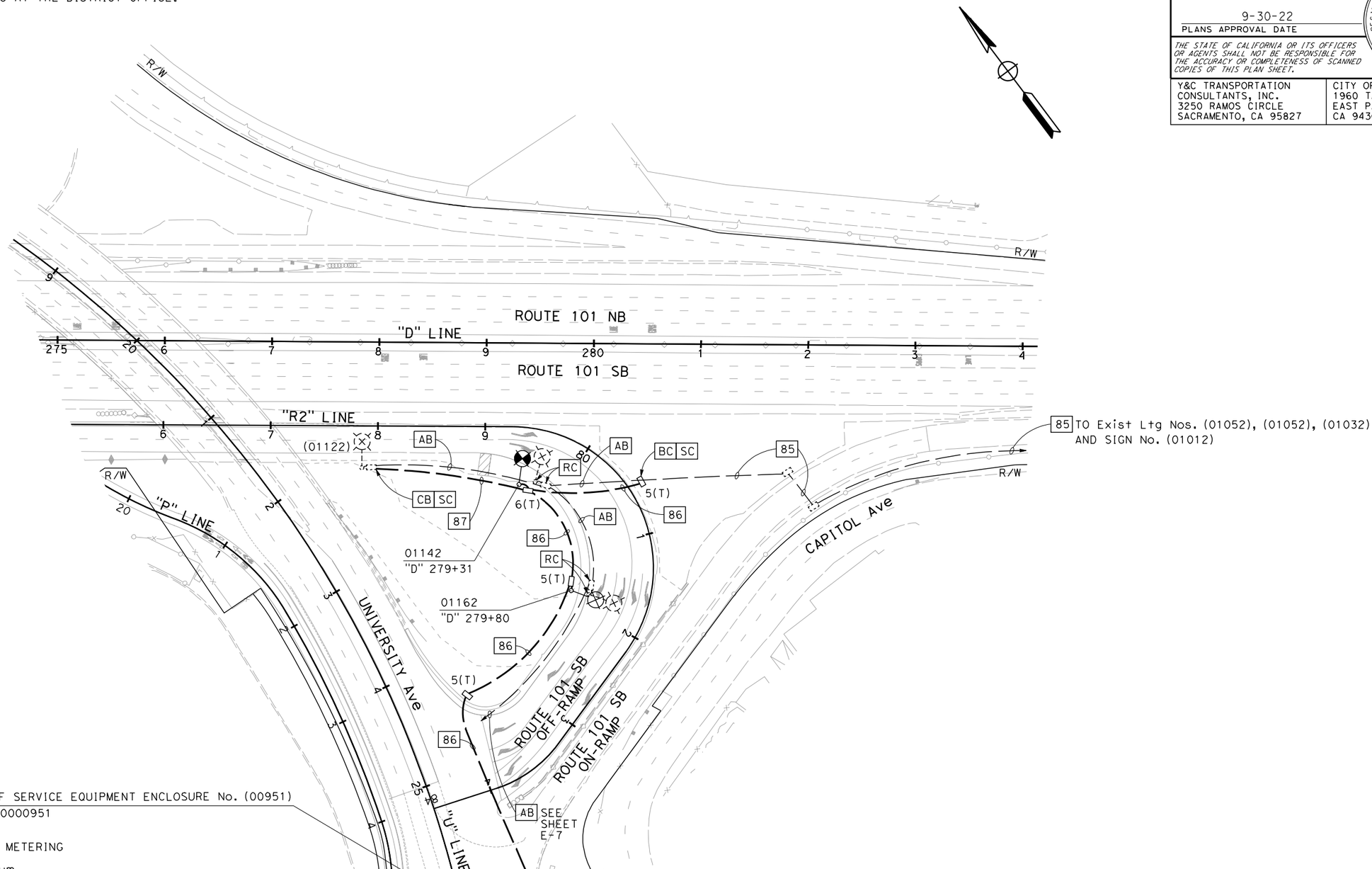

Exist TYPE III-AF SERVICE EQUIPMENT ENCLOSURE No. (00951)

CTID No. 04351010000951
Exist LOAD:
- 1-800 W CCTV
- 1-1500 W RAMP METERING
- 1-100 W TDC
- 6-235 W LED Lum
- 2-85 W SIGN Ltg

FOR NOTES, ABBREVIATIONS AND LEGEND, SEE SHEETS E-1 TO E-3

APPROVED FOR ELECTRICAL WORK ONLY

MODIFYING LIGHTING SYSTEMS

SCALE: 1" = 50'

E-4

REVISED BY	DATE REVISED
MY	07-15-22

CALCULATED-DESIGNED BY: MENG YANG
CHECKED BY: KIN Y. CHAN
CONSULTANT FUNCTIONAL SUPERVISOR: DAN K. YAU
STATE OF CALIFORNIA - DEPARTMENT OF TRANSPORTATION

LAST REVISION 07-15-22 | DATE PLOTTED => 7/6/2022 | TIME PLOTTED => 3:50:08 PM

BORDER LAST REVISED 7/2/2010 | USERNAME => myang | DGN FILE => E-4 LTG1 | RELATIVE BORDER SCALE IS IN INCHES 0 1 2 3 | UNIT 0703 | PROJECT NUMBER & PHASE 04000007591

Dist	COUNTY	ROUTE	POST MILES TOTAL PROJECT	SHEET No.	TOTAL SHEETS
04	SM	101	0.8/1.1	90	136

REGISTERED CIVIL ENGINEER — DATE 7-15-22

PLANS APPROVAL DATE 9-30-22

KIN Y. CHAN No. 55391 Exp. 12-31-22 CIVIL — REGISTERED PROFESSIONAL ENGINEER — STATE OF CALIFORNIA

THE STATE OF CALIFORNIA OR ITS OFFICERS OR AGENTS SHALL NOT BE RESPONSIBLE FOR THE ACCURACY OR COMPLETENESS OF SCANNED COPIES OF THIS PLAN SHEET.

Y&C TRANSPORTATION CONSULTANTS, INC.
3250 RAMOS CIRCLE
SACRAMENTO, CA 95827

CITY OF EAST PALO ALTO
1960 TATE STREET
EAST PALO ALTO,
CA 94303

NOTE:

FOR ACCURATE RIGHT OF WAY DATA, CONTACT RIGHT OF WAY ENGINEERING AT THE DISTRICT OFFICE.

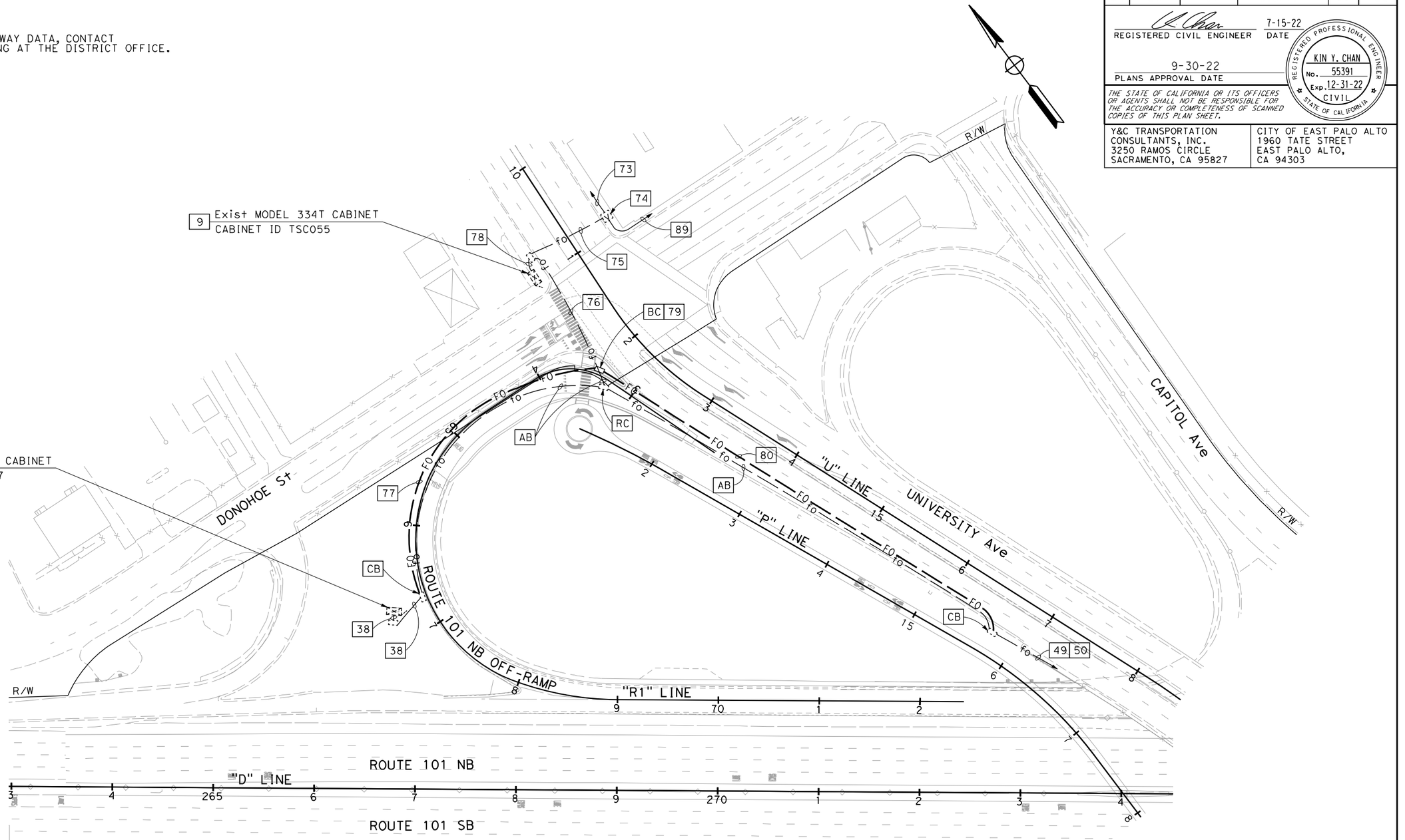

MODIFYING FIBER OPTIC CABLE SYSTEMS

SCALE: 1" = 50'

E-5

FOR NOTES, ABBREVIATIONS AND LEGEND, SEE SHEETS E-1 TO E-3

APPROVED FOR ELECTRICAL WORK ONLY

STATE OF CALIFORNIA - DEPARTMENT OF TRANSPORTATION — Caltrans

CONSULTANT FUNCTIONAL SUPERVISOR: DAN K. YAU

CALCULATED-DESIGNED BY: MENG YANG

CHECKED BY: KIN Y. CHAN

REVISED BY	DATE REVISED
MY	07-15-22

LAST REVISION 07-15-22 — DATE PLOTTED => 7/6/2022 — TIME PLOTTED => 3:50:24 PM

BORDER LAST REVISED 7/2/2010 — USERNAME => myang — DGN FILE => E-5 F01 — RELATIVE BORDER SCALE IS IN INCHES 0 1 2 3 — UNIT 0703 — PROJECT NUMBER & PHASE 04000007591

Dist	COUNTY	ROUTE	POST MILES TOTAL PROJECT	SHEET No.	TOTAL SHEETS
04	SM	101	0.8/1.1	91	136

REGISTERED CIVIL ENGINEER — 7-15-22 DATE

9-30-22
PLANS APPROVAL DATE

KIN Y. CHAN No. 55391 Exp. 12-31-22 CIVIL — REGISTERED PROFESSIONAL ENGINEER — STATE OF CALIFORNIA

THE STATE OF CALIFORNIA OR ITS OFFICERS OR AGENTS SHALL NOT BE RESPONSIBLE FOR THE ACCURACY OR COMPLETENESS OF SCANNED COPIES OF THIS PLAN SHEET.

Y&C TRANSPORTATION CONSULTANTS, INC.
3250 RAMOS CIRCLE
SACRAMENTO, CA 95827

CITY OF EAST PALO ALTO
1960 TATE STREET
EAST PALO ALTO,
CA 94303

NOTE:

FOR ACCURATE RIGHT OF WAY DATA, CONTACT RIGHT OF WAY ENGINEERING AT THE DISTRICT OFFICE.

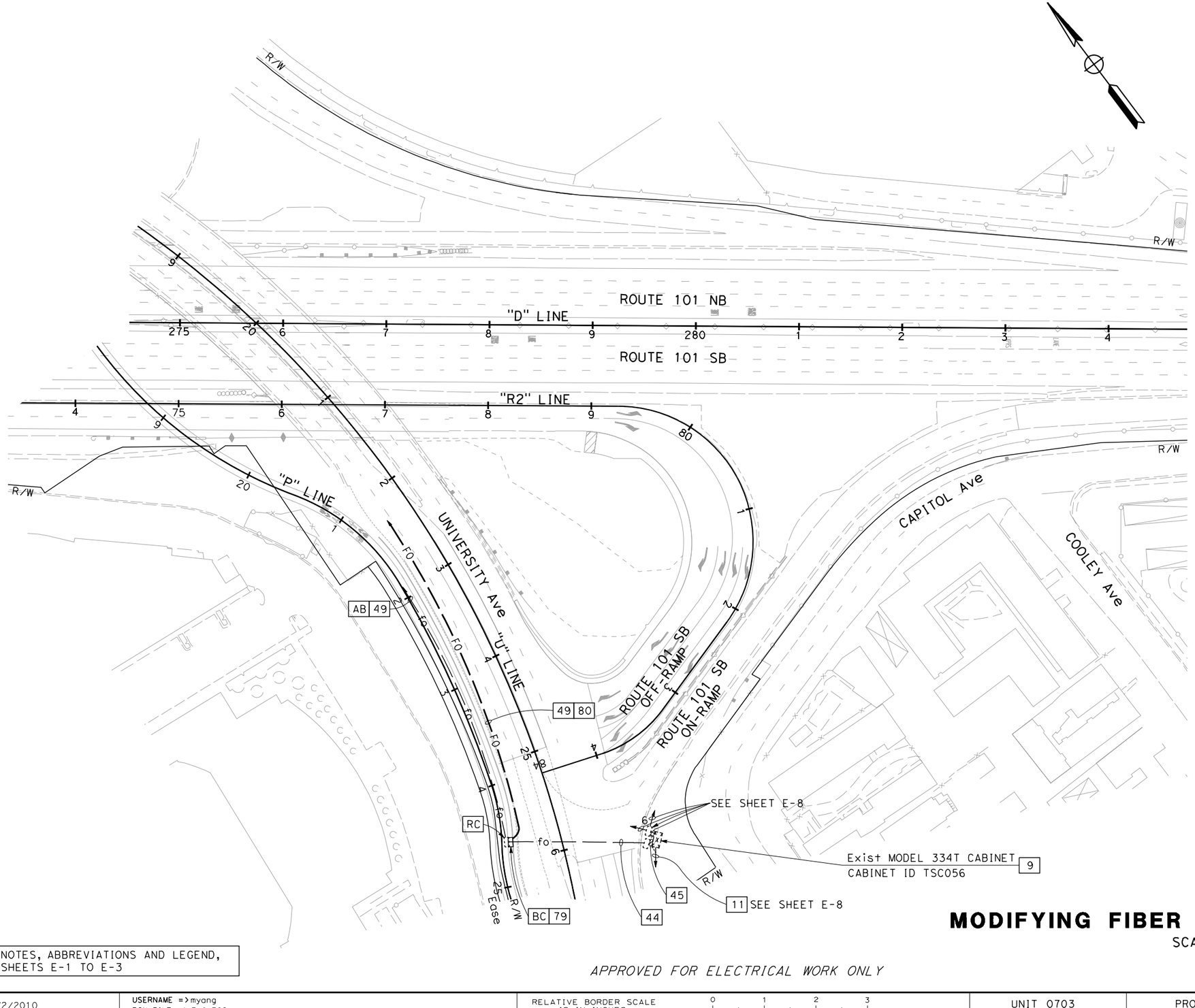

FOR NOTES, ABBREVIATIONS AND LEGEND, SEE SHEETS E-1 TO E-3

APPROVED FOR ELECTRICAL WORK ONLY

MODIFYING FIBER OPTIC CABLE SYSTEMS

SCALE: 1" = 50'

E-6

STATE OF CALIFORNIA - DEPARTMENT OF TRANSPORTATION — Caltrans

CONSULTANT FUNCTIONAL SUPERVISOR: DAN K. YAU

CALCULATED-DESIGNED BY: MENG YANG
CHECKED BY: KIN Y. CHAN

REVISED BY: MY
DATE REVISED: 07-15-22

LAST REVISION: 07-15-22
DATE PLOTTED => 7/6/2022
TIME PLOTTED => 3:50:45 PM

BORDER LAST REVISED 7/2/2010
USERNAME => myang
DGN FILE => E-6 F02
RELATIVE BORDER SCALE IS IN INCHES 0 1 2 3
UNIT 0703
PROJECT NUMBER & PHASE 04000007591

Dist	COUNTY	ROUTE	POST MILES TOTAL PROJECT	SHEET No.	TOTAL SHEETS
04	SM	101	0.8/1.1	92	136

REGISTERED CIVIL ENGINEER — 7-15-22 DATE

9-30-22
PLANS APPROVAL DATE

KIN Y. CHAN No. 55391 Exp. 12-31-22 CIVIL — REGISTERED PROFESSIONAL ENGINEER — STATE OF CALIFORNIA

THE STATE OF CALIFORNIA OR ITS OFFICERS OR AGENTS SHALL NOT BE RESPONSIBLE FOR THE ACCURACY OR COMPLETENESS OF SCANNED COPIES OF THIS PLAN SHEET.

Y&C TRANSPORTATION CONSULTANTS, INC.
3250 RAMOS CIRCLE
SACRAMENTO, CA 95827

CITY OF EAST PALO ALTO
1960 TATE STREET
EAST PALO ALTO,
CA 94303

NOTE:

FOR ACCURATE RIGHT OF WAY DATA, CONTACT RIGHT OF WAY ENGINEERING AT THE DISTRICT OFFICE.

STEADY DEMAND SEQUENCE

Ø2 Ø5 — Ø2 Ø6 — ØOLA Ø7

EXISTING PHASE DIAGRAM

ØOLA = Ø6 + Ø7

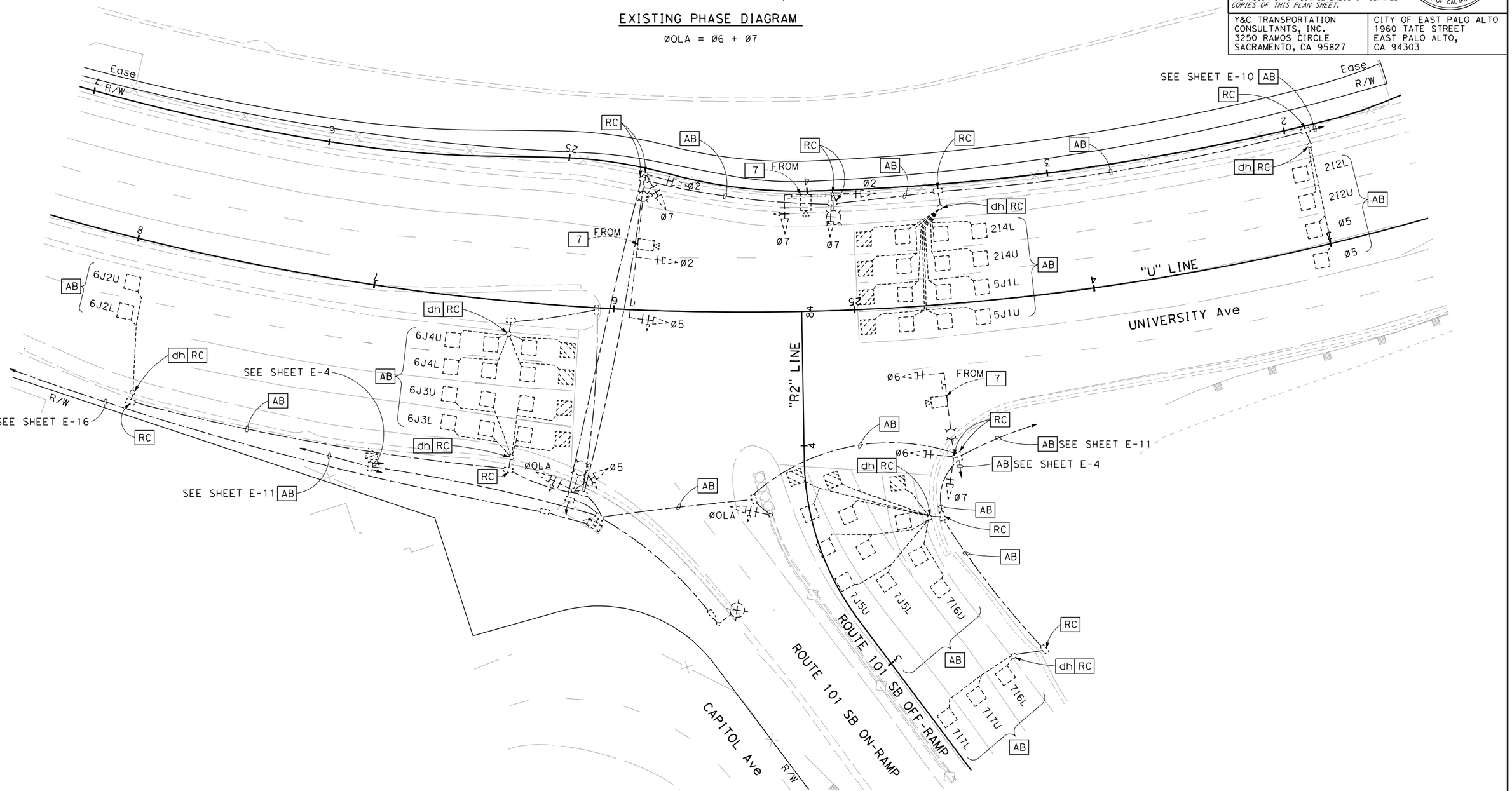

FOR NOTES, ABBREVIATIONS AND LEGEND, SEE SHEETS E-1 TO E-3

LOCATION 3 (EXISTING)

APPROVED FOR ELECTRICAL WORK ONLY

MODIFYING SIGNAL AND LIGHTING SYSTEMS

SCALE: 1" = 20'

E-7

LAST REVISION DATE PLOTTED => 7/6/2022
07-15-22 TIME PLOTTED => 3:50:58 PM

REVISED BY	DATE REVISED
MY	07-15-22

CALCULATED-DESIGNED BY: MENG YANG
CHECKED BY: KIN Y. CHAN
CONSULTANT FUNCTIONAL SUPERVISOR: DAN K. YAU

STATE OF CALIFORNIA - DEPARTMENT OF TRANSPORTATION
Caltrans

BORDER LAST REVISED 7/2/2010 | USERNAME => myang | DGN FILE => E-7 CT SIG EX | RELATIVE BORDER SCALE IS IN INCHES 0 1 2 3 | UNIT 0703 | PROJECT NUMBER & PHASE 04000007591

Dist	COUNTY	ROUTE	POST MILES TOTAL PROJECT	SHEET No.	TOTAL SHEETS
04	SM	101	0.8/1.1	93	136

REGISTERED CIVIL ENGINEER — 7-15-22 DATE

9-30-22 PLANS APPROVAL DATE

KIN Y. CHAN No. 55391 Exp. 12-31-22 CIVIL — REGISTERED PROFESSIONAL ENGINEER — STATE OF CALIFORNIA

THE STATE OF CALIFORNIA OR ITS OFFICERS OR AGENTS SHALL NOT BE RESPONSIBLE FOR THE ACCURACY OR COMPLETENESS OF SCANNED COPIES OF THIS PLAN SHEET.

Y&C TRANSPORTATION CONSULTANTS, INC.
3250 RAMOS CIRCLE
SACRAMENTO, CA 95827

CITY OF EAST PALO ALTO
1960 TATE STREET
EAST PALO ALTO,
CA 94303

NOTE:

FOR ACCURATE RIGHT OF WAY DATA, CONTACT RIGHT OF WAY ENGINEERING AT THE DISTRICT OFFICE.

STEADY DEMAND SEQUENCE

Ø2 Ø5 — Ø2 Ø6 — ØOLA Ø7

EXISTING PHASE DIAGRAM

(NO CHANGE)
ØOLA = Ø6 + Ø7

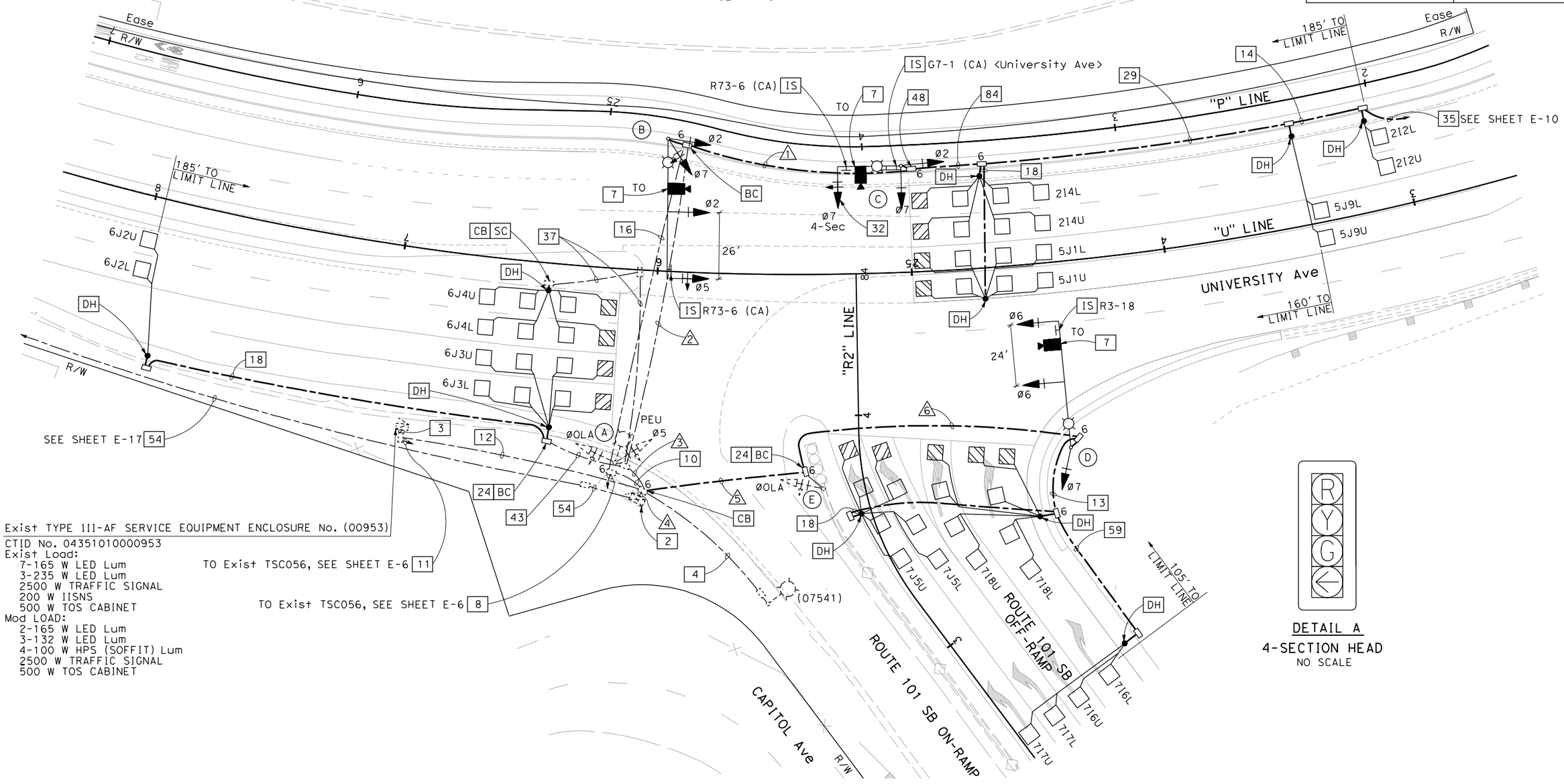

Exist TYPE III-AF SERVICE EQUIPMENT ENCLOSURE No. (00953)
CTID No. 04351010000953
Exist Load:
7-165 W LED Lum
3-235 W LED Lum
2500 W TRAFFIC SIGNAL
200 W IISNS
500 W TOS CABINET
Mod LOAD:
2-165 W LED Lum
3-132 W LED Lum
4-100 W HPS (SOFFIT) Lum
2500 W TRAFFIC SIGNAL
500 W TOS CABINET

TO Exist TSC056, SEE SHEET E-6 11

TO Exist TSC056, SEE SHEET E-6 8

DETAIL A
4-SECTION HEAD
NO SCALE

FOR NOTES, ABBREVIATIONS AND LEGEND, SEE SHEETS E-1 TO E-3

LOCATION 3

APPROVED FOR ELECTRICAL WORK ONLY

MODIFYING SIGNAL AND LIGHTING SYSTEMS

SCALE: 1" = 20'

E-8

REVISED BY	DATE REVISED
MY	07-15-22

CALCULATED-DESIGNED BY: MENG YANG
CHECKED BY: KIN Y. CHAN
CONSULTANT FUNCTIONAL SUPERVISOR: DAN K. YAU

STATE OF CALIFORNIA - DEPARTMENT OF TRANSPORTATION
Caltrans

LAST REVISION: DATE PLOTTED => 7/6/2022
07-15-22 TIME PLOTTED => 3:51:01 PM

BORDER LAST REVISED 7/2/2010 | USERNAME => myang | DGN FILE => E-8 CT SIG NEW | RELATIVE BORDER SCALE IS IN INCHES 0 1 2 3 | UNIT 0703 | PROJECT NUMBER & PHASE 04000007591

Dist	COUNTY	ROUTE	POST MILES TOTAL PROJECT	SHEET No.	TOTAL SHEETS
04	SM	101	0.8/1.1	94	136

REGISTERED CIVIL ENGINEER — DATE 7-15-22

9-30-22
PLANS APPROVAL DATE

KIN Y. CHAN No. 55391 Exp. 12-31-22 CIVIL — REGISTERED PROFESSIONAL ENGINEER — STATE OF CALIFORNIA

THE STATE OF CALIFORNIA OR ITS OFFICERS OR AGENTS SHALL NOT BE RESPONSIBLE FOR THE ACCURACY OR COMPLETENESS OF SCANNED COPIES OF THIS PLAN SHEET.

Y&C TRANSPORTATION CONSULTANTS, INC.
3250 RAMOS CIRCLE
SACRAMENTO, CA 95827

CITY OF EAST PALO ALTO
1960 TATE STREET
EAST PALO ALTO,
CA 94303

SCHEDULES: (FOR SHEET E-8)

CONDUCTOR AND CONDUIT SCHEDULE

CONDUCTOR SCHEDULE	No. OF CONDUCTORS IN CONDUIT RUN NUMBER 1	2	3	4	5	6
No. 14 CONDUCTORS						
Ø2	3	3		3		
Ø5		3	3	3		
Ø6				3	3	3
Ø7	4	4	4	7	3	3
ØOLA			5	10	5	
PEU			3			
SPARES	3	3	3	6	3	3
TOTAL No. 14	10	13	18	32	14	9
No. 8 CONDUCTORS						
SIGNAL NEUTRAL	1	1	1	2	1	1
No. 6 CONDUCTORS						
LIGHTING	2	2	2		2	2
SERVICE TO CONTROLLER				2		
TOTAL No. 6	2	2	2	2	2	2
DETECTOR CABLES (DLC)						
212U/212L	2	2	2	2		
214U/214L	2	2	2	2		
716U/716L				2	2	2
717U/717L				2	2	2
718U/718L				2	2	2
7J5U/7J5L				2	2	2
5J1U/5J1L	2	2	2	2		
5J9U/5J9L	2	2	2	2		
6J2U/6J2L			2	2		
6J3U/6J3L			2	2		
6J4U/6J4L			2	2		
TOTAL DETECTOR CABLES	8	8	14	22	8	8
SIGNAL INTERCONNECT CABLES	1	1	1	1/#		
HYBRID CAMERA CABLE (HCC)	1				1	1
CONDUIT SIZE (INCHES)	3"	3"	3"	2-3"	3"	3"
NEW/EXISTING CONDUIT	N	E	E	E	N	N
% FILL	17	16	23	19	17	15

NOTE: REMOVE ALL Exist CONDUCTORS/CABLES.
ADD ALL NEW CONDUCTORS/CABLES, UNLESS OTHERWISE NOTED.

= Exist CABLE TO REMAIN

POLE AND EQUIPMENT SCHEDULE

No.	STANDARD TYPE	SMA	LMA	Veh Sig Mtg ø	MAST ARM	ø	POLE	LED Lum	REMARKS *
(A)	Exist 15		15′			5 OLA	SV-2-TA	Rdwy 1	ALL EXISTING EQUIPMENT TO REMAIN.
(B)	29-5-100	55′	15′	5 2	MAS MAS	2 7	SV-2-TB	Rdwy 11	SEE LEGEND 7 . IS R73-6(CA).
(C)	19-4-100	25′	15′	7	MAS-4B	2 7	SV-2-TB	Rdwy 11	SEE LEGEND 7 . IS R73-6(CA) AND G7-1(CA).
(D)	29-5-100	50′	15′	6 6	MAS MAS	7	SV-1-T	Rdwy 11	SEE LEGEND 7 . IS R3-18.
(E)	Exist 1-B					OLA	TV-1-T		ALL EXISTING EQUIPMENT TO REMAIN.

LOCATION 3

MODIFYING SIGNAL AND LIGHTING SYSTEMS

SCALE: 1" = 20′

E-9

REVISED BY	MY
DATE REVISED	07-15-22
CALCULATED-DESIGNED BY	MENG YANG
CHECKED BY	KIN Y. CHAN
CONSULTANT FUNCTIONAL SUPERVISOR	DAN K. YAU

STATE OF CALIFORNIA - DEPARTMENT OF TRANSPORTATION — Caltrans

LAST REVISION 07-15-22
DATE PLOTTED => 7/6/2022
TIME PLOTTED => 3:51:09 PM

BORDER LAST REVISED 7/2/2010 | USERNAME => myang | DGN FILE => E-9 CT SCH | RELATIVE BORDER SCALE IS IN INCHES 0 1 2 3 | UNIT 0703 | PROJECT NUMBER & PHASE 04000007591

Dist	COUNTY	ROUTE	POST MILES TOTAL PROJECT	SHEET No.	TOTAL SHEETS
04	SM	101	0.8/1.1	95	136

REGISTERED CIVIL ENGINEER — DATE 7-15-22

PLANS APPROVAL DATE 9-30-22

KIN Y. CHAN No. 55391 Exp. 12-31-22 CIVIL — REGISTERED PROFESSIONAL ENGINEER — STATE OF CALIFORNIA

THE STATE OF CALIFORNIA OR ITS OFFICERS OR AGENTS SHALL NOT BE RESPONSIBLE FOR THE ACCURACY OR COMPLETENESS OF SCANNED COPIES OF THIS PLAN SHEET.

Y&C TRANSPORTATION CONSULTANTS, INC.
3250 RAMOS CIRCLE
SACRAMENTO, CA 95827

CITY OF EAST PALO ALTO
1960 TATE STREET
EAST PALO ALTO,
CA 94303

NOTE:

FOR ACCURATE RIGHT OF WAY DATA, CONTACT
RIGHT OF WAY ENGINEERING AT THE DISTRICT OFFICE.

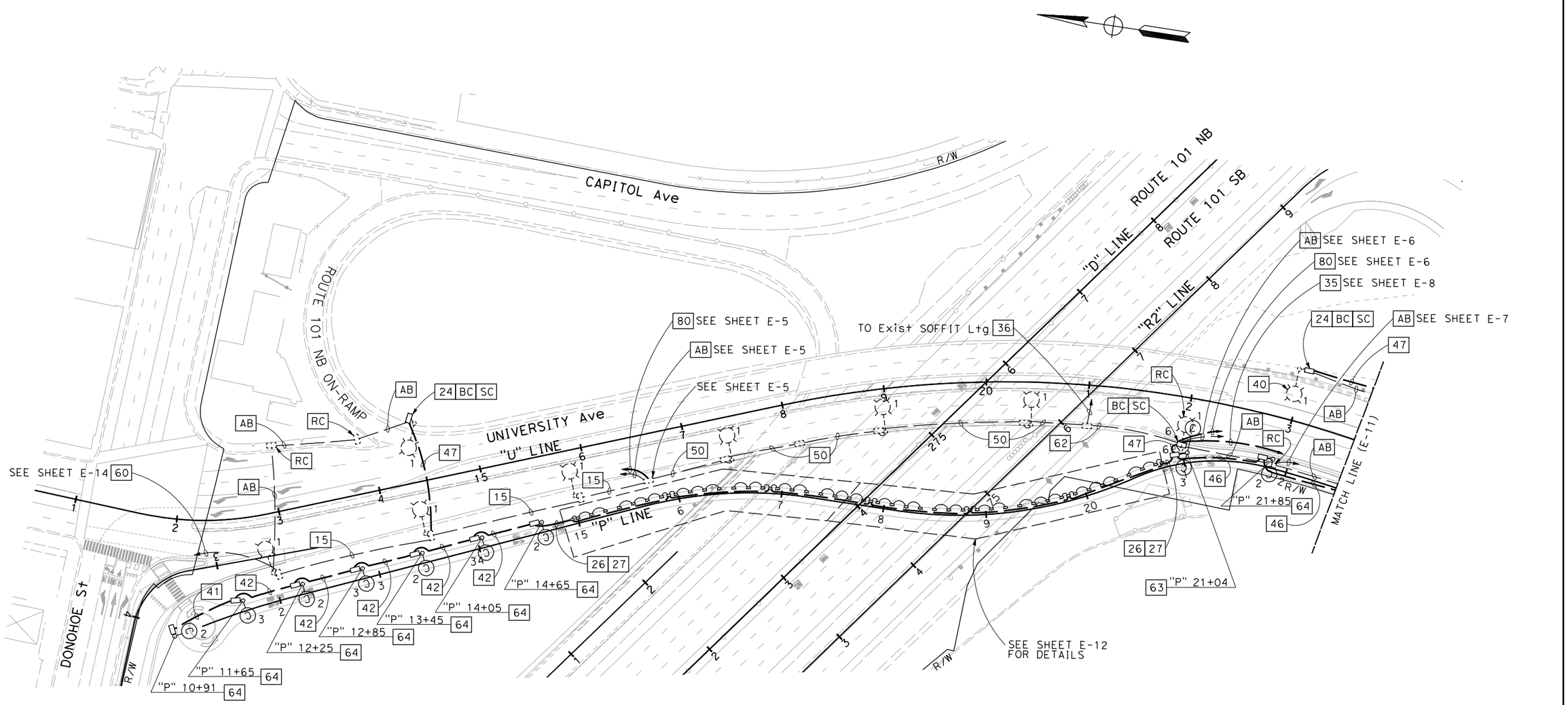

LIGHTING (CITY STREET)

SCALE: 1" = 50'

E-10

FOR NOTES, ABBREVIATIONS AND LEGEND, SEE SHEETS E-1 TO E-3

APPROVED FOR ELECTRICAL WORK ONLY

REVISED BY	MY	
DATE REVISED	07-15-22	
CALCULATED-DESIGNED BY	MENG YANG	
CHECKED BY	KIN Y. CHAN	
CONSULTANT FUNCTIONAL SUPERVISOR	DAN K. YAU	

STATE OF CALIFORNIA - DEPARTMENT OF TRANSPORTATION — Caltrans

LAST REVISION 07-15-22 | DATE PLOTTED => 7/6/2022 | TIME PLOTTED => 3:51:12 PM

BORDER LAST REVISED 7/2/2010 | USERNAME => myang | DGN FILE => E-10 Street Ltg1 | RELATIVE BORDER SCALE IS IN INCHES 0 1 2 3 | UNIT 0703 | PROJECT NUMBER & PHASE 04000007591

Dist	COUNTY	ROUTE	POST MILES TOTAL PROJECT	SHEET No.	TOTAL SHEETS
04	SM	101	0.8/1.1	96	136

REGISTERED CIVIL ENGINEER — DATE 7-15-22

PLANS APPROVAL DATE 9-30-22

KIN Y. CHAN No. 55391 Exp. 12-31-22 CIVIL — REGISTERED PROFESSIONAL ENGINEER — STATE OF CALIFORNIA

THE STATE OF CALIFORNIA OR ITS OFFICERS OR AGENTS SHALL NOT BE RESPONSIBLE FOR THE ACCURACY OR COMPLETENESS OF SCANNED COPIES OF THIS PLAN SHEET.

Y&C TRANSPORTATION CONSULTANTS, INC.
3250 RAMOS CIRCLE
SACRAMENTO, CA 95827

CITY OF EAST PALO ALTO
1960 TATE STREET
EAST PALO ALTO,
CA 94303

NOTE:

FOR ACCURATE RIGHT OF WAY DATA, CONTACT RIGHT OF WAY ENGINEERING AT THE DISTRICT OFFICE.

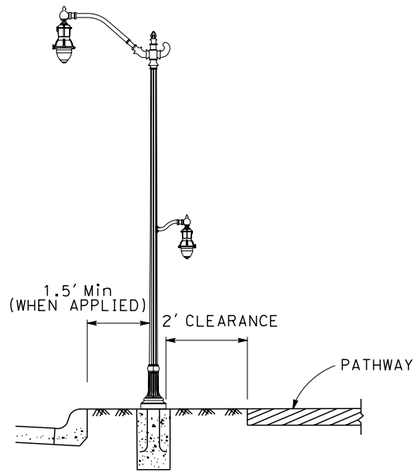

DETAIL A
STREET LIGHT POLE LOCATION
NO SCALE

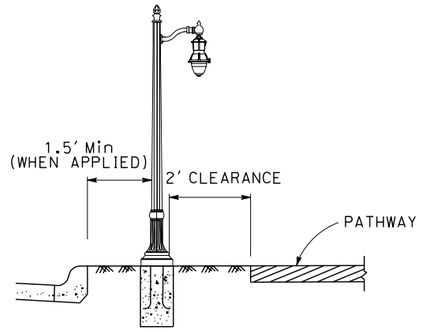

DETAIL B
STREET LIGHT POLE LOCATION
NO SCALE

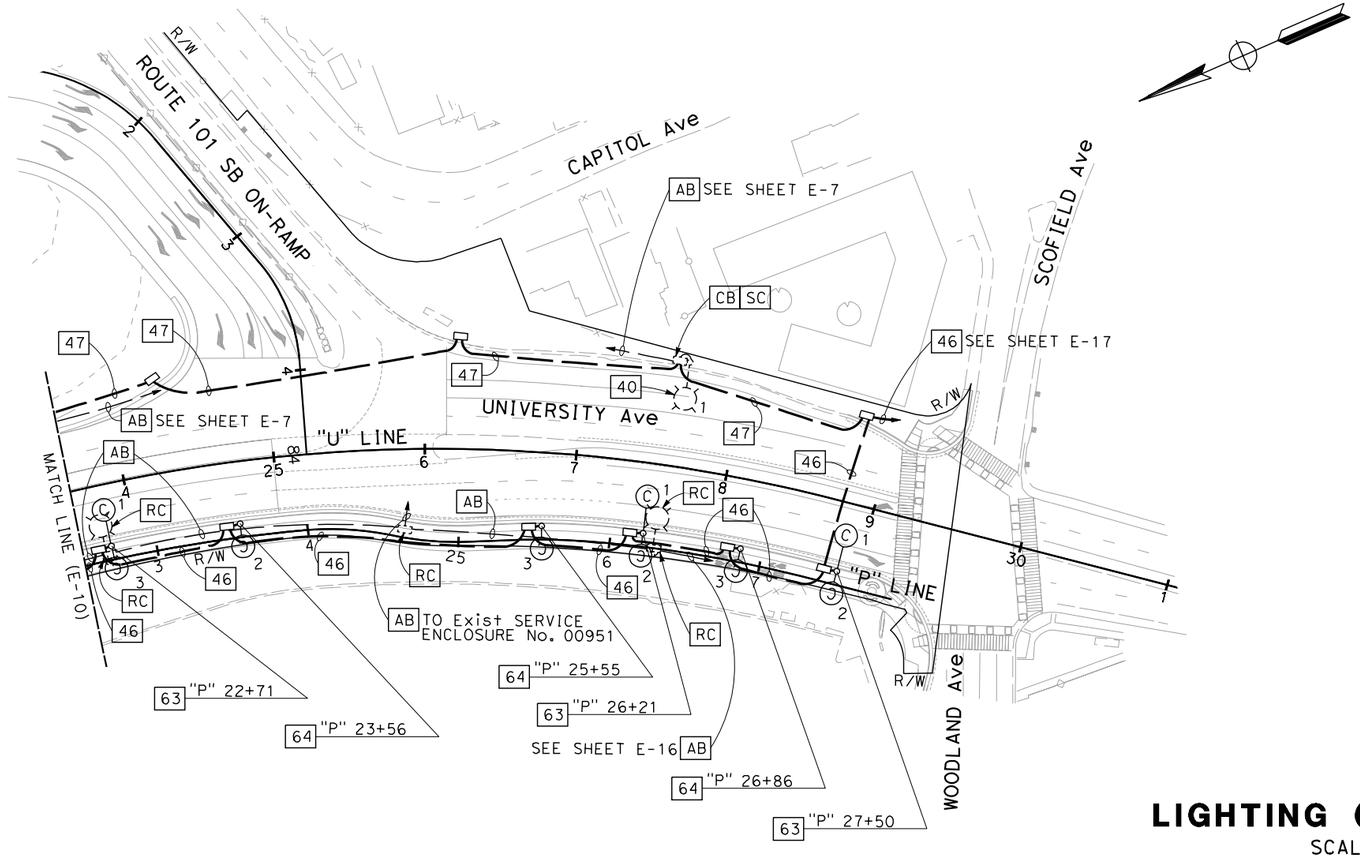

LIGHTING (CITY STREET)

SCALE: 1" = 50'

E-11

FOR NOTES, ABBREVIATIONS AND LEGEND, SEE SHEETS E-1 TO E-3

APPROVED FOR ELECTRICAL WORK ONLY

CALCULATED-DESIGNED BY	MENG YANG	REVISED BY: MY
CHECKED BY	KIN Y. CHAN	DATE REVISED: 07-15-22
CONSULTANT FUNCTIONAL SUPERVISOR	DAN K. YAU	
STATE OF CALIFORNIA - DEPARTMENT OF TRANSPORTATION	Caltrans	

LAST REVISION DATE PLOTTED => 7/6/2022
07-15-22 TIME PLOTTED => 3:51:25 PM

BORDER LAST REVISED 7/2/2010 | USERNAME => myang | DGN FILE => E-11 Street Ltg2 | RELATIVE BORDER SCALE IS IN INCHES 0 1 2 3 | UNIT 0703 | PROJECT NUMBER & PHASE 04000007591

Dist	COUNTY	ROUTE	POST MILES TOTAL PROJECT	SHEET No.	TOTAL SHEETS
04	SM	101	0.8/1.1	97	136

REGISTERED CIVIL ENGINEER — DATE 7-15-22

PLANS APPROVAL DATE 9-30-22

KIN Y. CHAN No. 55391 Exp. 12-31-22 CIVIL — REGISTERED PROFESSIONAL ENGINEER — STATE OF CALIFORNIA

THE STATE OF CALIFORNIA OR ITS OFFICERS OR AGENTS SHALL NOT BE RESPONSIBLE FOR THE ACCURACY OR COMPLETENESS OF SCANNED COPIES OF THIS PLAN SHEET.

Y&C TRANSPORTATION CONSULTANTS, INC.
3250 RAMOS CIRCLE
SACRAMENTO, CA 95827

CITY OF EAST PALO ALTO
1960 TATE STREET
EAST PALO ALTO,
CA 94303

NOTE:

FOR ACCURATE RIGHT OF WAY DATA, CONTACT RIGHT OF WAY ENGINEERING AT THE DISTRICT OFFICE.

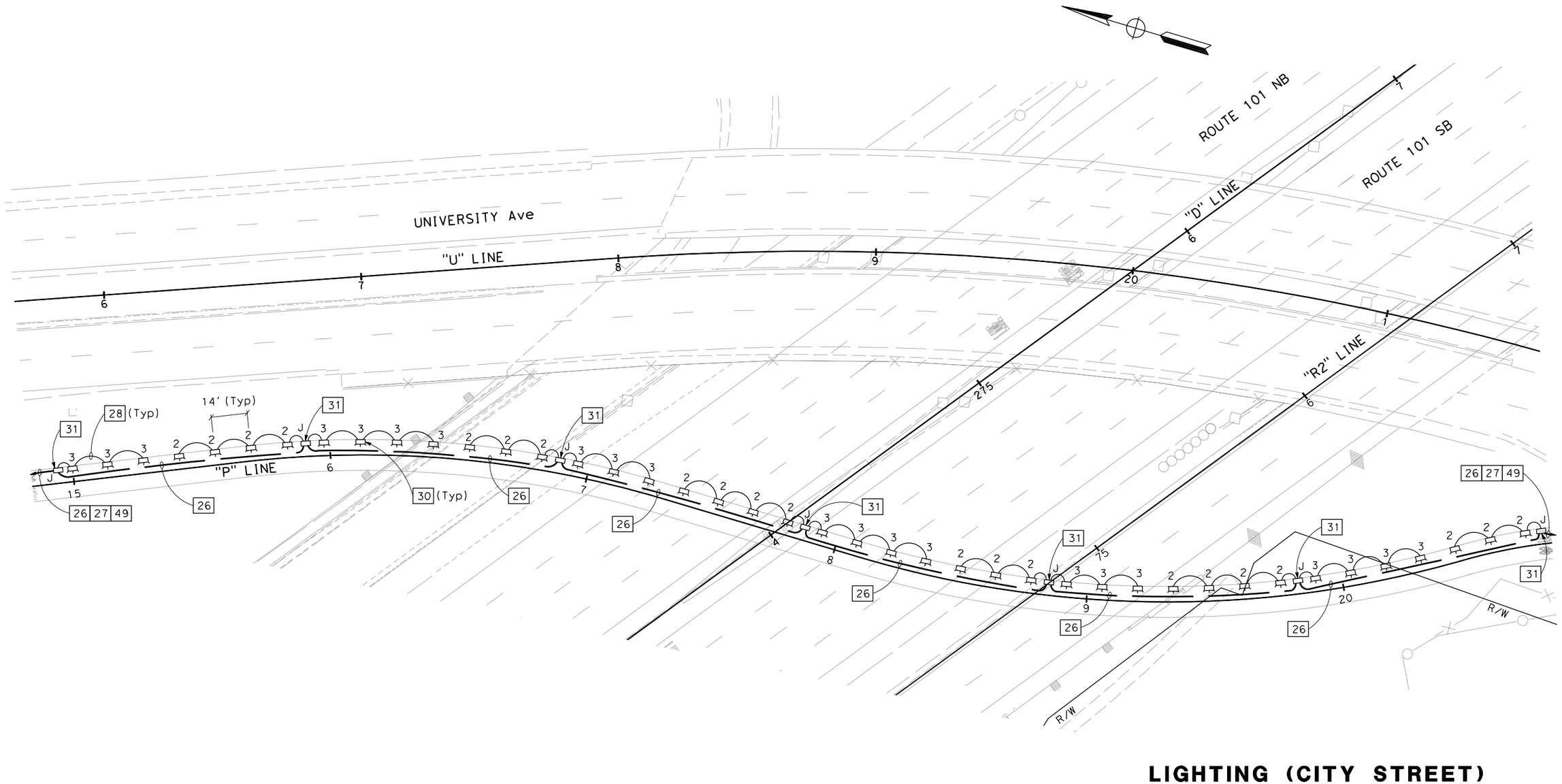

FOR NOTES, ABBREVIATIONS AND LEGEND, SEE SHEETS E-1 TO E-3

APPROVED FOR ELECTRICAL WORK ONLY

LIGHTING (CITY STREET)

SCALE: 1" = 20'

E-12

STATE OF CALIFORNIA - DEPARTMENT OF TRANSPORTATION — Caltrans

CONSULTANT FUNCTIONAL SUPERVISOR: DAN K. YAU

CALCULATED-DESIGNED BY: MENG YANG

CHECKED BY: KIN Y. CHAN

REVISED BY: MY — DATE REVISED: 07-15-22

LAST REVISION DATE PLOTTED => 7/6/2022
TIME PLOTTED => 3:51:35 PM

BORDER LAST REVISED 7/2/2010 | USERNAME => myang | DGN FILE => E-12 POC Ltg1 | RELATIVE BORDER SCALE IS IN INCHES 0 1 2 3 | UNIT 0703 | PROJECT NUMBER & PHASE 04000007591

Dist	COUNTY	ROUTE	POST MILES TOTAL PROJECT	SHEET No.	TOTAL SHEETS
04	SM	101	0.8/1.1	98	136

REGISTERED CIVIL ENGINEER 7-15-22 DATE

9-30-22
PLANS APPROVAL DATE

REGISTERED PROFESSIONAL ENGINEER KIN Y. CHAN No. 55391 Exp. 12-31-22 CIVIL STATE OF CALIFORNIA

THE STATE OF CALIFORNIA OR ITS OFFICERS OR AGENTS SHALL NOT BE RESPONSIBLE FOR THE ACCURACY OR COMPLETENESS OF SCANNED COPIES OF THIS PLAN SHEET.

Y&C TRANSPORTATION CONSULTANTS, INC.
3250 RAMOS CIRCLE
SACRAMENTO, CA 95827

CITY OF EAST PALO ALTO
1960 TATE STREET
EAST PALO ALTO,
CA 94303

NOTE:

FOR ACCURATE RIGHT OF WAY DATA, CONTACT RIGHT OF WAY ENGINEERING AT THE DISTRICT OFFICE.

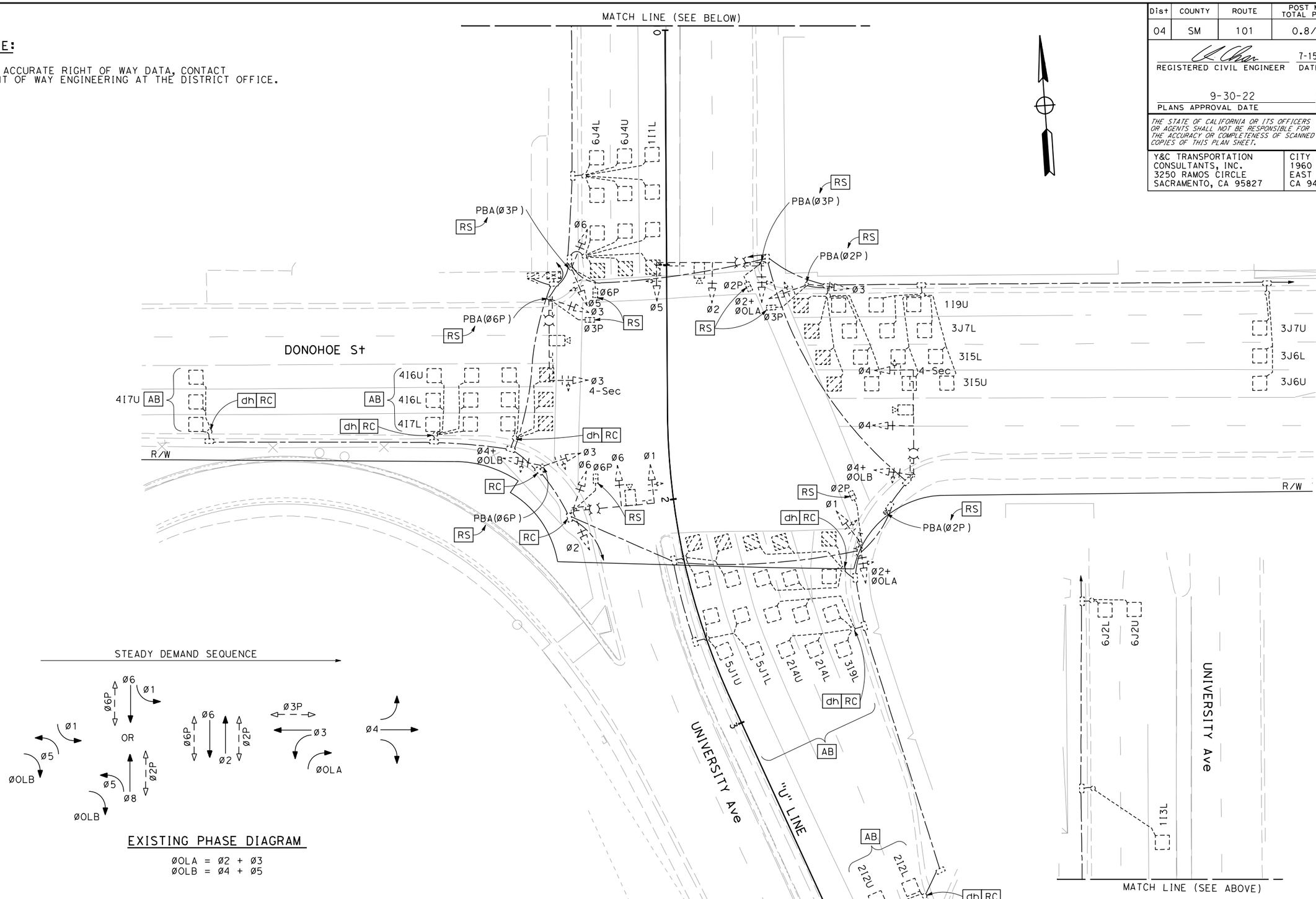

EXISTING PHASE DIAGRAM

ØOLA = Ø2 + Ø3
ØOLB = Ø4 + Ø5

SIGNAL AND LIGHTING (CITY STREET LOCATION 1)

SCALE: 1" = 20'

(EXISTING)

APPROVED FOR ELECTRICAL WORK ONLY

FOR NOTES, ABBREVIATIONS AND LEGEND, SEE SHEETS E-1 TO E-3

E-13

STATE OF CALIFORNIA - DEPARTMENT OF TRANSPORTATION
Caltrans

CONSULTANT FUNCTIONAL SUPERVISOR: DAN K. YAU
CALCULATED-DESIGNED BY: MENG YANG
CHECKED BY: KIN Y. CHAN
REVISED BY: MY
DATE REVISED: 07-15-22

LAST REVISION 07-15-22
DATE PLOTTED => 7/6/2022
TIME PLOTTED => 3:51:38 PM

Dist	COUNTY	ROUTE	POST MILES TOTAL PROJECT	SHEET No.	TOTAL SHEETS
04	SM	101	0.8/1.1	99	136

REGISTERED CIVIL ENGINEER — DATE 7-15-22

PLANS APPROVAL DATE 9-30-22

KIN Y. CHAN No. 55391 Exp. 12-31-22 CIVIL — REGISTERED PROFESSIONAL ENGINEER — STATE OF CALIFORNIA

THE STATE OF CALIFORNIA OR ITS OFFICERS OR AGENTS SHALL NOT BE RESPONSIBLE FOR THE ACCURACY OR COMPLETENESS OF SCANNED COPIES OF THIS PLAN SHEET.

Y&C TRANSPORTATION CONSULTANTS, INC.
3250 RAMOS CIRCLE
SACRAMENTO, CA 95827

CITY OF EAST PALO ALTO
1960 TATE STREET
EAST PALO ALTO,
CA 94303

NOTE:

FOR ACCURATE RIGHT OF WAY DATA, CONTACT RIGHT OF WAY ENGINEERING AT THE DISTRICT OFFICE.

MATCH LINE (SEE BELOW)

83 Exist TYPE III-AF SERVICE EQUIPMENT ENCLOSURE No. (01160)
Exist Load:
4-139 W LED Lum
2500 W TRAFFIC SIGNAL
4-100 W CCTV
Mod LOAD:
4-139 W LED Lum
2500 W TRAFFIC SIGNAL
4-100 W CCTV
200 W RRFB

140' TO LIMIT LINE (30 mph)

DONOHOE St

APS(Ø3P) TO Exist TSC055 6

APS(Ø6P)

APS(Ø2P)

5 TO Exist TSC055

Exist 1½"C, 1 SIC TO CAPITOL Ave

Exist 1½"C, 1 DLC

SEE SHEET E-19 67

Exist 1½"C, 2 DLC

UNIVERSITY Ave

"U" LINE

140' TO LIMIT LINE (30 mph)

MATCH LINE (SEE ABOVE)

STEADY DEMAND SEQUENCE

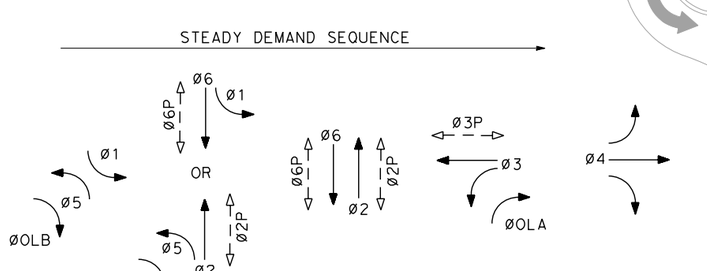

EXISTING PHASE DIAGRAM

(NO CHANGE)
ØOLA = Ø2 + Ø3
ØOLB = Ø4 + Ø5

FOR NOTES, ABBREVIATIONS AND LEGEND, SEE SHEETS E-1 TO E-3

SIGNAL AND LIGHTING (CITY STREET LOCATION 1)

SCALE: 1" = 20'

E-14

APPROVED FOR ELECTRICAL WORK ONLY

REVISED BY	DATE REVISED
MY	07-15-22

MENG YANG — CALCULATED-DESIGNED BY
KIN Y. CHAN — CHECKED BY
DAN K. YAU — CONSULTANT FUNCTIONAL SUPERVISOR

STATE OF CALIFORNIA - DEPARTMENT OF TRANSPORTATION — Caltrans

LAST REVISION 07-15-22 | DATE PLOTTED => 7/6/2022 | TIME PLOTTED => 3:51:44 PM

BORDER LAST REVISED 7/2/2010 | USERNAME => myang | DGN FILE => E-14 SIG NEW-1 | RELATIVE BORDER SCALE IS IN INCHES 0 1 2 3 | UNIT 0703 | PROJECT NUMBER & PHASE 04000007591

Dist	COUNTY	ROUTE	POST MILES TOTAL PROJECT	SHEET No.	TOTAL SHEETS
04	SM	101	0.8/1.1	100	136

K Chan — REGISTERED CIVIL ENGINEER — 7-15-22 DATE

9-30-22 PLANS APPROVAL DATE

REGISTERED PROFESSIONAL ENGINEER — KIN Y. CHAN — No. 55391 — Exp. 12-31-22 — CIVIL — STATE OF CALIFORNIA

THE STATE OF CALIFORNIA OR ITS OFFICERS OR AGENTS SHALL NOT BE RESPONSIBLE FOR THE ACCURACY OR COMPLETENESS OF SCANNED COPIES OF THIS PLAN SHEET.

Y&C TRANSPORTATION CONSULTANTS, INC. 3250 RAMOS CIRCLE SACRAMENTO, CA 95827

CITY OF EAST PALO ALTO 1960 TATE STREET EAST PALO ALTO, CA 94303

SCHEDULES: (FOR SHEET E-14)

CONDUCTOR AND CONDUIT SCHEDULE

CONDUCTOR DESIGNATION	No. OF CONDUCTORS — CONDUIT RUN NUMBER 1	2	3	4	5	6	7	8	9	10	11
No. 14 CONDUCTORS											
Ø1	3				3	3	3	3	3		
Ø2	6	3	3		3	3	3	3	3		
Ø3	6	3	3	3	3	3					
Ø4	6	3	3	3	3	3	3	3	3	3	3
Ø5	3	3	3								
Ø6	6	3			3	3	3				
ØOLA	4	2	2		2	2	2	2	2		
ØOLB	2				2	2	2	2	2	2	2
Ø2P	4	2	2		2	2	2	2	2		
Ø3P	2	2	2	2							
Ø6P	4	2			2	2	2				
APS(Ø2P)	2	1	1	1	1	1	1	1	1	1	
APS(Ø3P)	1	1	1								
APS(Ø6P)	1				1	1					
APS COMMON	2	1	1	1	1	1	1	1	1	1	
SPARES	6	3	3	3	3	3	3	3	3	3	3
TOTAL No. 14	58	29	24	13	29	29	25	20	20	10	8
No. 8 CONDUCTORS											
LIGHTING (240 V)		2	2		2	2	2	2	2	2	2
RRFB					2+	2+					
SIGNAL NEUTRAL	2	1	1	1	1	1	1	1	1	1	1
TOTAL No. 8	2	3	3	1	5	5	3	3	3	3	3
No. 6 CONDUCTORS											
SERVICE TO CONTROLLER (120 V)	2										
DETECTOR CABLES (DLC)											
1I1L	1	1									
1I3L	1	1									
1I9U	1	1	1	1							
2I2U/2I2L	2				2	2	2	2	2		
2I4U/2I4L	2				2	2	2	2	2		
3I5U/3I5L	2	2	2	2							
3I9L	1				1	1	1	1	1		
3J6U/3J6L	2	2	2	2							
3J7U/3J7L	2	2	2	2							
4I6U/4I6L	2				2						
4I7U/4I7L	2				2						
4I8U (BIKE)/4I8L (BIKE)	2+				2+						
5J1U/5J1L	2				2	2	2	2			
6J2U/6J2L	2	2									
6J4U/6J4L	2	2									
TOTAL DETECTOR CABLES	26	13	7	7	13	7	7	7	5		
SIGNAL INTERCONNECT CABLE	1*/2	2	1	1	1*	1*	1*				
APS CABLE		2+		2+			1+			1+	
HYBRID CAMERA CABLE (HCC)								1	1	1	1
CONDUIT SIZE (INCHES)	2-3"	3	3	2½	3	3	3	2½	2½	2	2
NEW/EXISTING CONDUIT (N/E)	E	E	E	E	E	E	E	E	E	E	E
% FILL	27	30	19	23	27	22	19	26	23	17	14

+ = ADD NEW CONDUCTORS/CABLES.
* = REMOVE Exist CONDUCTORS/CABLES. ADD NEW CONDUCTORS/CABLES.

POLE AND EQUIPMENT SCHEDULE

No.	STANDARD TYPE	SMA	LMA	Veh Sig Mtg Ø	MAST ARM	Ø	POLE	Ped Sig Ø	Ped Sig Mtg	APS Ø	APS ARROW	LED Lum	REMARKS
(A)	Exist 24-4-113	35′	12′	3	MAS-4B	3	SV-1-T	3+	SP-1-T+	6+	←	139 W	
(B)	Exist 1-B					5 6	TV-2-T	6+	SP-1-T+	3+	→		
(C)	Exist 26-4-113	45′	12′	5 2	MAS MAS	2+ OLA	SV-1-T	2+	SP-1-T+	3+	←	139 W	
(D)	Exist 1-B					3 4	TV-2-T	3+	SP-1-T+	2+	→		
(E)	Exist 26-4-113	45′	15′	4 4	MAS-4B MAS	4+ OLB	SV-1-T					139 W	ALL EXISTING EQUIPMENT TO REMAIN.
(F)	Exist PBA POST									2+	←		
(G)	Exist 1-B					1 2+ OLA	TV-2-T	2+	SP-1-T+				
(H)	Exist 24-4-113	35′	12′	1 6	MAS MAS	2 6	SV-2-TA	6+	SP-1-T+			139 W	SEE LEGEND 91 .
(I)	Exist 1-B					3 4+ OLB	TV-2-T						ALL EXISTING EQUIPMENT TO REMAIN.
(J)	PBA POST									6	→		

+ INSTALL NEW EQUIPMENT TO Exist SIGNAL STANDARD

SIGNAL AND LIGHTING (CITY STREET LOCATION 1)

SCALE: 1" = 20′

E-15

REVISED BY	DATE REVISED
MY	07-15-22

MENG YANG — KIN Y. CHAN — CALCULATED-DESIGNED BY — CHECKED BY

CONSULTANT FUNCTIONAL SUPERVISOR — DAN K. YAU

STATE OF CALIFORNIA - DEPARTMENT OF TRANSPORTATION — Caltrans

LAST REVISION 07-15-22 | DATE PLOTTED => 7/6/2022 | TIME PLOTTED => 3:56:59 PM

BORDER LAST REVISED 7/2/2010 | USERNAME => myang | DGN FILE => E-15 SCH 1 | RELATIVE BORDER SCALE IS IN INCHES 0 1 2 3 | UNIT 0703 | PROJECT NUMBER & PHASE 04000007591

Dist	COUNTY	ROUTE	POST MILES TOTAL PROJECT	SHEET No.	TOTAL SHEETS
04	SM	101	0.8/1.1	101	136

REGISTERED CIVIL ENGINEER — 7-15-22 DATE

9-30-22 PLANS APPROVAL DATE

KIN Y. CHAN No. 55391 Exp. 12-31-22 CIVIL — REGISTERED PROFESSIONAL ENGINEER — STATE OF CALIFORNIA

THE STATE OF CALIFORNIA OR ITS OFFICERS OR AGENTS SHALL NOT BE RESPONSIBLE FOR THE ACCURACY OR COMPLETENESS OF SCANNED COPIES OF THIS PLAN SHEET.

Y&C TRANSPORTATION CONSULTANTS, INC.
3250 RAMOS CIRCLE
SACRAMENTO, CA 95827

CITY OF EAST PALO ALTO
1960 TATE STREET
EAST PALO ALTO,
CA 94303

NOTE:

FOR ACCURATE RIGHT OF WAY DATA, CONTACT RIGHT OF WAY ENGINEERING AT THE DISTRICT OFFICE.

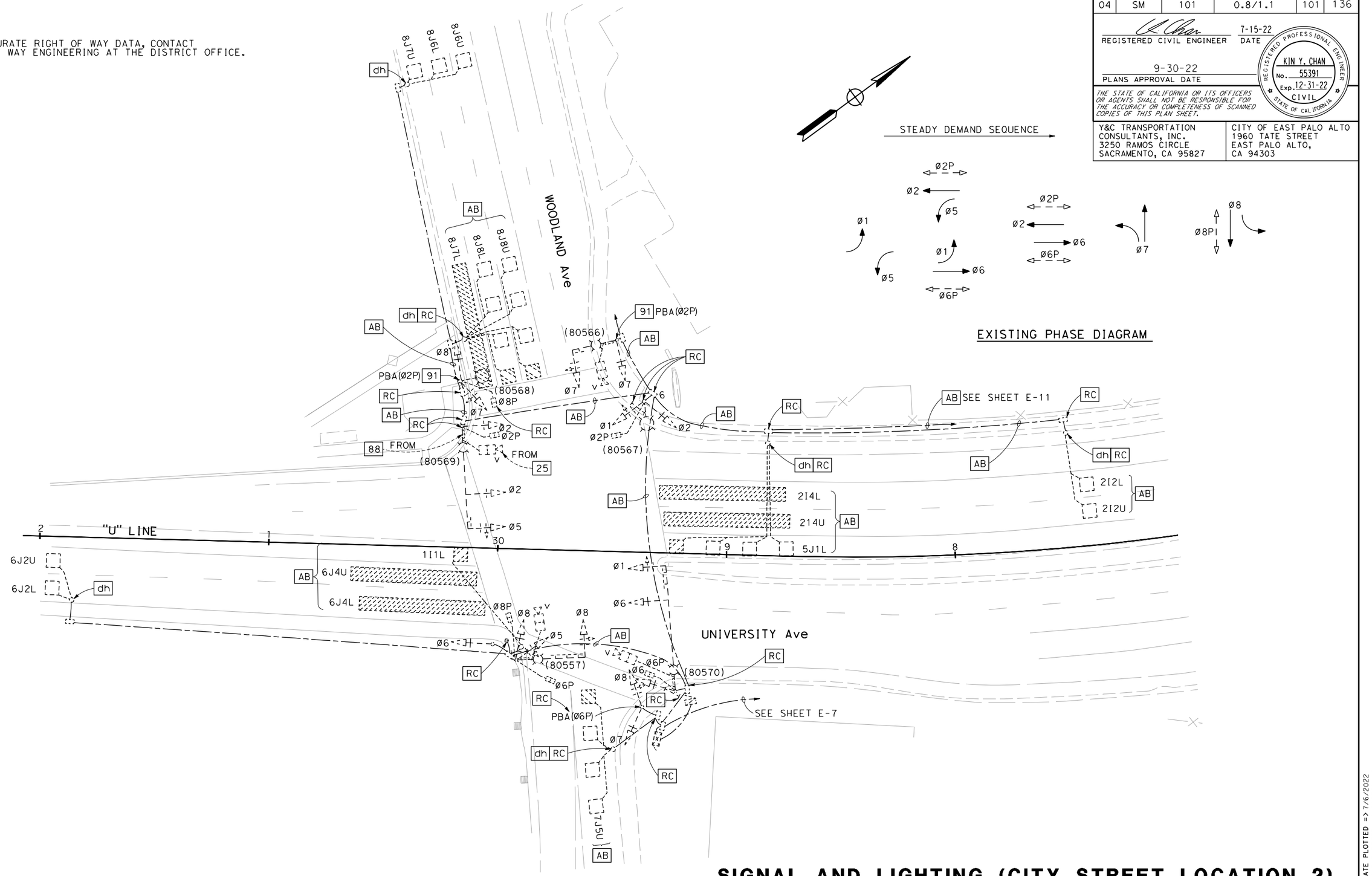

FOR NOTES, ABBREVIATIONS AND LEGEND, SEE SHEETS E-1 TO E-3

(EXISTING)

APPROVED FOR ELECTRICAL WORK ONLY

SIGNAL AND LIGHTING (CITY STREET LOCATION 2)

SCALE: 1" = 20'

E-16

REVISED BY	DATE REVISED
MY	07-15-22

CALCULATED-DESIGNED BY: MENG YANG
CHECKED BY: KIN Y. CHAN
CONSULTANT FUNCTIONAL SUPERVISOR: DAN K. YAU
STATE OF CALIFORNIA - DEPARTMENT OF TRANSPORTATION

LAST REVISION 07-15-22
DATE PLOTTED => 7/6/2022
TIME PLOTTED => 3:53:11 PM

BORDER LAST REVISED 7/2/2010
USERNAME => myang
DGN FILE => E-16 SIG EX-2
RELATIVE BORDER SCALE IS IN INCHES 0 1 2 3
UNIT 0703
PROJECT NUMBER & PHASE 04000007591

Dist	COUNTY	ROUTE	POST MILES TOTAL PROJECT	SHEET No.	TOTAL SHEETS
04	SM	101	0.8/1.1	102	136

REGISTERED CIVIL ENGINEER — 7-15-22 DATE

9-30-22
PLANS APPROVAL DATE

KIN Y. CHAN No. 55391 Exp. 12-31-22 CIVIL — REGISTERED PROFESSIONAL ENGINEER — STATE OF CALIFORNIA

THE STATE OF CALIFORNIA OR ITS OFFICERS OR AGENTS SHALL NOT BE RESPONSIBLE FOR THE ACCURACY OR COMPLETENESS OF SCANNED COPIES OF THIS PLAN SHEET.

Y&C TRANSPORTATION CONSULTANTS, INC.
3250 RAMOS CIRCLE
SACRAMENTO, CA 95827

CITY OF EAST PALO ALTO
1960 TATE STREET
EAST PALO ALTO,
CA 94303

NOTE:

FOR ACCURATE RIGHT OF WAY DATA, CONTACT RIGHT OF WAY ENGINEERING AT THE DISTRICT OFFICE.

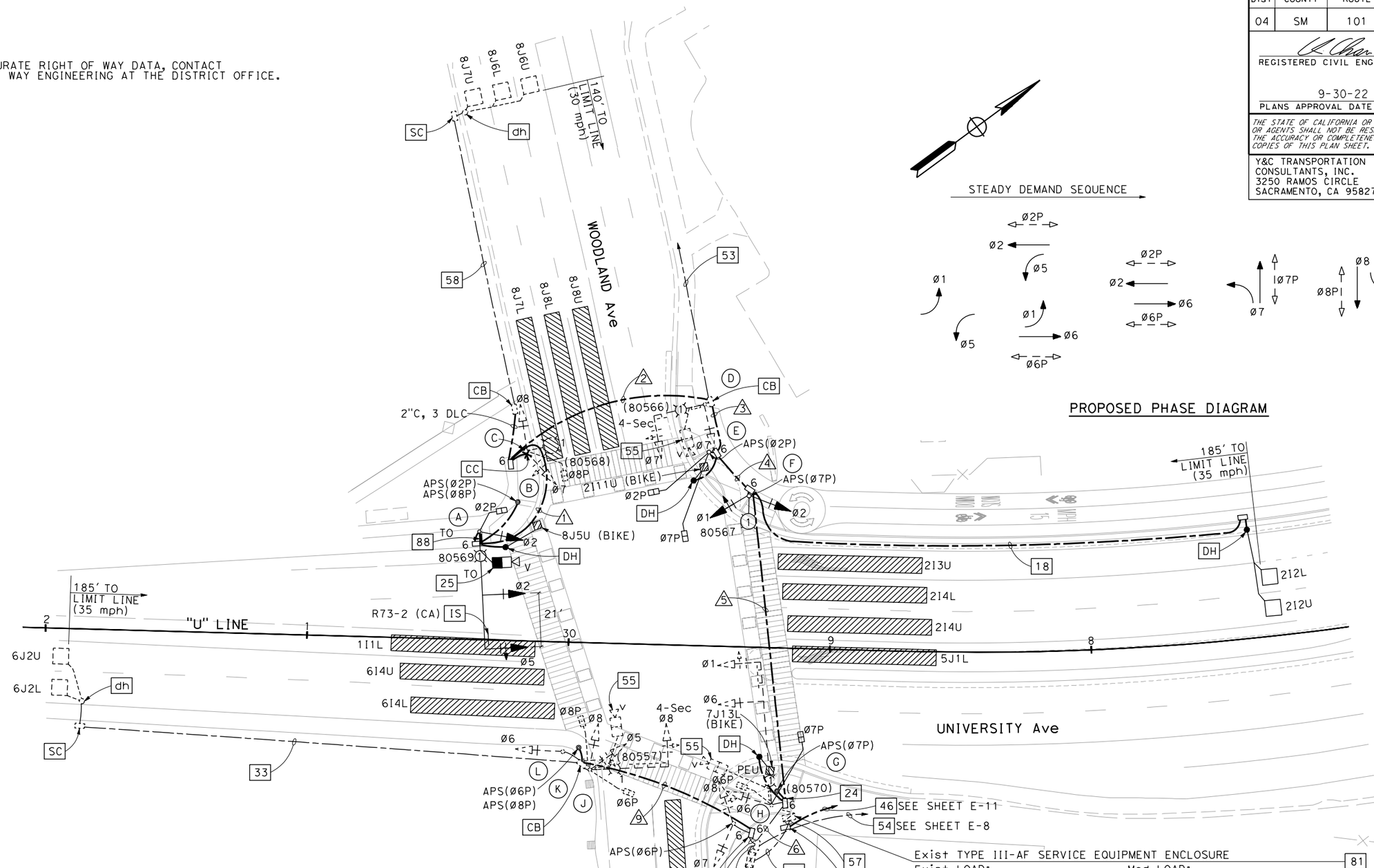

STEADY DEMAND SEQUENCE

PROPOSED PHASE DIAGRAM

Exist TYPE III-AF SERVICE EQUIPMENT ENCLOSURE — 81

Exist LOAD:	Mod LOAD:
1000 W TRAFFIC SIGNAL	1000 W TRAFFIC SIGNAL
6-139 W LED Lum	4-139 W LED Lum
10-150 W LED Lum	2-132 W LED Lum (Rdwy 11)
4-100 W HPS (SOFFIT) Lum	9-150 W LED Lum
4-200 W IISNS	4-118 W LED DECORATIVE Lum
	11-51 W LED DECORATIVE Lum
	4-27 W LED DECORATIVE Lum
	42-5 W LED LIGHT BOLLARD
	4-200 W IISNS

SIGNAL AND LIGHTING (CITY STREET LOCATION 2)

SCALE: 1" = 20'

E-17

FOR NOTES, ABBREVIATIONS AND LEGEND, SEE SHEETS E-1 TO E-3

APPROVED FOR ELECTRICAL WORK ONLY

REVISED BY	MY		
DATE REVISED	07-15-22		
CALCULATED-DESIGNED BY	MENG YANG		
CHECKED BY	KIN Y. CHAN		
CONSULTANT FUNCTIONAL SUPERVISOR	DAN K. YAU		
STATE OF CALIFORNIA - DEPARTMENT OF TRANSPORTATION	Caltrans		

LAST REVISION 07-15-22 — DATE PLOTTED => 7/6/2022 — TIME PLOTTED => 3:53:14 PM

BORDER LAST REVISED 7/2/2010 | USERNAME => myang | DGN FILE => E-17 SIG NEW-2 | RELATIVE BORDER SCALE IS IN INCHES 0 1 2 3 | UNIT 0703 | PROJECT NUMBER & PHASE 04000007591

Dist	COUNTY	ROUTE	POST MILES TOTAL PROJECT	SHEET No.	TOTAL SHEETS
04	SM	101	0.8/1.1	103	136

REGISTERED CIVIL ENGINEER — DATE 7-15-22

9-30-22
PLANS APPROVAL DATE

REGISTERED PROFESSIONAL ENGINEER — KIN Y. CHAN No. 55391 Exp. 12-31-22 CIVIL — STATE OF CALIFORNIA

THE STATE OF CALIFORNIA OR ITS OFFICERS OR AGENTS SHALL NOT BE RESPONSIBLE FOR THE ACCURACY OR COMPLETENESS OF SCANNED COPIES OF THIS PLAN SHEET.

Y&C TRANSPORTATION CONSULTANTS, INC.
3250 RAMOS CIRCLE
SACRAMENTO, CA 95827

CITY OF EAST PALO ALTO
1960 TATE STREET
EAST PALO ALTO,
CA 94303

SCHEDULES: (FOR SHEET E-17)

CONDUCTOR AND CONDUIT SCHEDULE

CONDUCTOR SCHEDULE	No. OF CONDUCTORS IN CONDUIT RUN NUMBER 1	2	3	4	5	6	7	8	9
No. 14 CONDUCTORS									
Ø1					3	3	3		
Ø2	3	3	3	3	3	3	3		
Ø5	3	3	3	3	3	3	6	3	3
Ø6						3	6	3	3
Ø7		3	4	4	4	4	7	3	
Ø8		3	3	3	3	3	7	4	4
Ø2P	2	2	2	2	2	2	2		
Ø6P						2	4	2	2
Ø7P				2	2	2	2		
Ø8P		2	2	2	2	2	4	2	2
APS(Ø2P)	2	2	2	2	2	2	2		
APS(Ø6P)							2	2	2
APS(Ø7P)					2	2	2		
APS(Ø8P)	2	2	2	2	2	2	4	2	2
PEU						3	3		
SPARES	3	3	3	3	3	3	6	3	3
TOTAL No. 14	15	23	24	26	31	39	63	24	21
No. 10 CONDUCTORS									
IISNS	2	2	2	2	2	2	2	2	2
VIDEO DETECTION POWER	2	2	2	2	2	2	2	2	2
TOTAL No. 10	4	4	4	4	4	4	4	4	4
No. 8 CONDUCTORS									
LIGHTING	2	2	2	2	2	2	2	2	2
SIGNAL NEUTRAL	1	1	1	1	1	1	2	1	1
TOTAL No. 8	3	3	3	3	3	3	4	3	3
DETECTOR CABLES (DLC)									
2I11U (BIKE)				1	1	1	1		
2I2U/2I2L					2	2	2		
6J2U/6J2L							2	2	2
7J13L (BIKE)						1	1		
8J5U (BIKE)	1	1	1	1	1	1	1		
8J6U/8J6L		2	2	2	2	2	2		
8J7U		1	1	1	1	1	1		
TOTAL DETECTOR CABLES	1	4	4	5	7	8	10	2	2
VIDEO DETECTION COAX CABLE	1	1	2	2	2	3	4	1	1
SIGNAL INTERCONNECT CABLE			1	1	1	1	#1		
APS CABLE	1			1		1			
CONDUIT SIZE (INCHES)	3	3	3	3	2-3"	3	2-3"	3	3
NEW/EXISTING CONDUIT (N/E)	N	N	N	N	N	E	E	E	N
% FILL	13	17	22	24	14	33	23	16	15

NOTE: REMOVE ALL Exist CONDUCTORS/CABLES.
ADD ALL NEW CONDUCTORS/CABLES, UNLESS OTHERWISE NOTED.

= Exist CABLE TO REMAIN

POLE AND EQUIPMENT SCHEDULE

No.	STANDARD TYPE	SMA	LMA	Veh Sig Mtg Ø	MAST ARM	Ø	POLE	Ped Sig Ø	Mtg	APS Ø	ARROW	LED Lum	REMARKS
(A)	26-4-100	45′	15′	5 2	MAS MAS	2	SV-1-T	2	SP-1-T			Rdwy 11	SEE LEGEND [25] AND [88]. [IS] R73-2(CA).
(B)	PBA POST					2 8				2 8	← →		
(C)	Exist 15					7 8	SV-2-TA	8	SP-1-T			139 W	SEE LEGEND [91].
(D)	Exist 17-3-129	20′	15′	7	MAS-4B	7	SV-1-T					139 W	SEE LEGEND [55] AND [91].
(E)	1-B (7′)							2 7	TP-2-T	2	→		
(F)	15TS		15′			1 2	SV-2-TA			7	→	Rdwy 11	
(G)	PBA POST									7	→		
(H)	Exist 29-5-29	55′	15′	1 6	MAS MAS	6	SV-1-T	6 7+	SP-2-T +			139 W	SEE LEGEND [55].
(I)	Exist 1-B					7 8	TV-2-T			6+	→		
(J)	Exist 19-3-129	30′	15′	8	MAS-4B	5 8	SV-2-TA	6 8	SP-2-T			139 W	SEE LEGEND [55].
(K)	PBA POST									6 8	← →		
(L)	Exist 1-B					6	TV-1-T						ALL EXISTING EQUIPMENT TO REMAIN.

+ INSTALL NEW EQUIPMENT TO Exist SIGNAL STANDARD

SIGNAL AND LIGHTING (CITY STREET LOCATION 2)

SCALE: 1" = 20′

E-18

MY	REVISED BY	DATE REVISED
	MENG YANG	07-15-22
	KIN Y. CHAN	

CALCULATED-DESIGNED BY
CHECKED BY

CONSULTANT FUNCTIONAL SUPERVISOR: DAN K. YAU

STATE OF CALIFORNIA - DEPARTMENT OF TRANSPORTATION — Caltrans

LAST REVISION 07-15-22
DATE PLOTTED => 7/6/2022
TIME PLOTTED => 3:54:10 PM

BORDER LAST REVISED 7/2/2010
USERNAME => myang
DGN FILE => E-18 SCH 2
RELATIVE BORDER SCALE IS IN INCHES 0 1 2 3
UNIT 0703
PROJECT NUMBER & PHASE 04000007591

Dist	COUNTY	ROUTE	POST MILES TOTAL PROJECT	SHEET No.	TOTAL SHEETS
04	SM	101	0.8/1.1	104	136

REGISTERED CIVIL ENGINEER — 7-15-22 DATE

9-30-22
PLANS APPROVAL DATE

REGISTERED PROFESSIONAL ENGINEER — KIN Y. CHAN No. 55391 Exp. 12-31-22 CIVIL — STATE OF CALIFORNIA

THE STATE OF CALIFORNIA OR ITS OFFICERS OR AGENTS SHALL NOT BE RESPONSIBLE FOR THE ACCURACY OR COMPLETENESS OF SCANNED COPIES OF THIS PLAN SHEET.

Y&C TRANSPORTATION CONSULTANTS, INC.
3250 RAMOS CIRCLE
SACRAMENTO, CA 95827

CITY OF EAST PALO ALTO
1960 TATE STREET
EAST PALO ALTO,
CA 94303

NOTE:

FOR ACCURATE RIGHT OF WAY DATA, CONTACT RIGHT OF WAY ENGINEERING AT THE DISTRICT OFFICE.

EQUIPMENT SCHEDULE

No.	STANDARD TYPE	APS ARROW	REMARKS
(A)	15-FBS		SEE DETAIL C ON SHEET ED-4
(B)	15-FBS		SEE DETAIL C ON SHEET ED-4
(C)	15TS	→	SEE DETAIL A ON SHEET ED-4
(D)	15-FBS (FIXED BASE)	←	SEE DETAIL B ON SHEET ED-4

EXACT POLE LOCATION SHALL BE DETERMINED IN THE FIELD BY THE ENGINEER

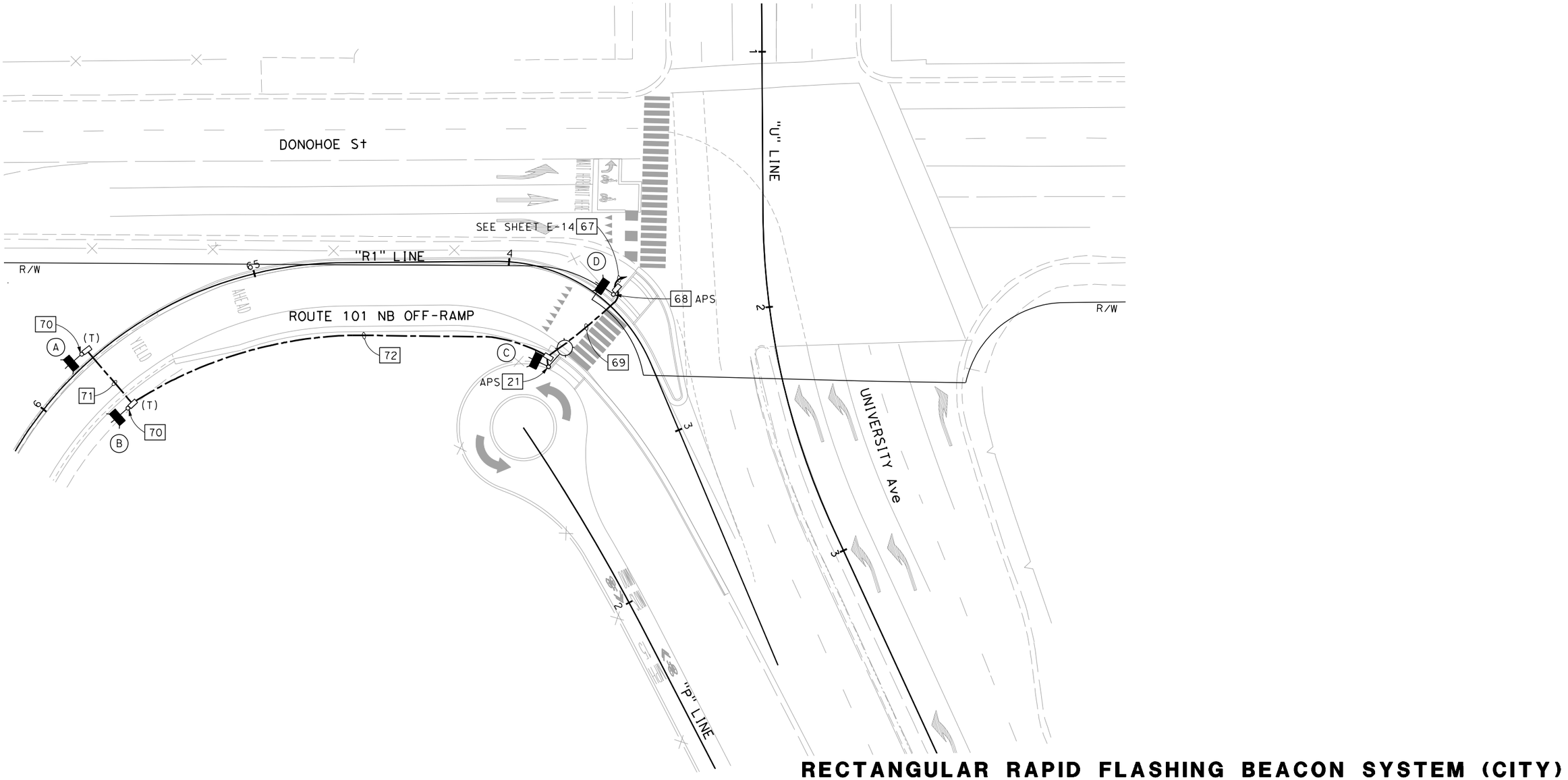

RECTANGULAR RAPID FLASHING BEACON SYSTEM (CITY)

SCALE: 1" = 20'

E-19

FOR NOTES, ABBREVIATIONS AND LEGEND, SEE SHEETS E-1 TO E-3

APPROVED FOR ELECTRICAL WORK ONLY

REVISED BY	DATE REVISED
MY	07-15-22

CALCULATED-DESIGNED BY: MENG YANG
CHECKED BY: KIN Y. CHAN
CONSULTANT FUNCTIONAL SUPERVISOR: DAN K. YAU
STATE OF CALIFORNIA - DEPARTMENT OF TRANSPORTATION
Caltrans

LAST REVISION 07-15-22
DATE PLOTTED => 7/6/2022
TIME PLOTTED => 3:54:18 PM

BORDER LAST REVISED 7/2/2010
USERNAME => myang
DGN FILE => E-19 RRFB
RELATIVE BORDER SCALE IS IN INCHES 0 1 2 3
UNIT 0703
PROJECT NUMBER & PHASE 04000007591

Dist	COUNTY	ROUTE	POST MILES TOTAL PROJECT	SHEET No.	TOTAL SHEETS
04	SM	101	0.8/1.1	105	136

REGISTERED CIVIL ENGINEER — DATE 7-15-22

PLANS APPROVAL DATE 9-30-22

REGISTERED PROFESSIONAL ENGINEER — KIN Y. CHAN No. 55391 Exp. 12-31-22 CIVIL — STATE OF CALIFORNIA

THE STATE OF CALIFORNIA OR ITS OFFICERS OR AGENTS SHALL NOT BE RESPONSIBLE FOR THE ACCURACY OR COMPLETENESS OF SCANNED COPIES OF THIS PLAN SHEET.

Y&C TRANSPORTATION CONSULTANTS, INC.
3250 RAMOS CIRCLE
SACRAMENTO, CA 95827

CITY OF EAST PALO ALTO
1960 TATE STREET
EAST PALO ALTO,
CA 94303

NOTES:

1. WELDING MUST COMPLY WITH STANDARD SPECIFICATION SECTION 75.
2. CONDUITS ENTERING THE PULL BOX MUST BE ENCASED IN PCC (3" ALL AROUND), PCC ENCASEMENT MUST EXTEND 5'-6" FROM THE PULL BOX.
3. FOR ADDITIONAL NOTES AND DETAILS, SEE STANDARD PLANS RSP ES-8B.

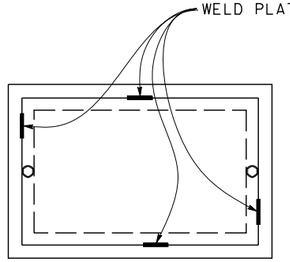

TOP VIEW

TRAFFIC PULL BOX WELDING DETAIL

REVISED BY	DATE REVISED
MY	07-15-22

CALCULATED-DESIGNED BY	CHECKED BY
MENG YANG	KIN Y. CHAN

CONSULTANT FUNCTIONAL SUPERVISOR: DAN K. YAU

STATE OF CALIFORNIA - DEPARTMENT OF TRANSPORTATION — Caltrans

ELECTRICAL SYSTEMS DETAILS

NO SCALE

(TRAFFIC PULL BOX DETAIL)

ED-1

LAST REVISION 07-15-22
DATE PLOTTED => 7/6/2022
TIME PLOTTED => 3:54:48 PM

BORDER LAST REVISED 7/2/2010 | USERNAME => myang | DGN FILE => ED-1 | RELATIVE BORDER SCALE IS IN INCHES 0 1 2 3 | UNIT 0703 | PROJECT NUMBER & PHASE 04000007591

Dist	COUNTY	ROUTE	POST MILES TOTAL PROJECT	SHEET No.	TOTAL SHEETS
04	SM	101	0.8/1.1	106	136

REGISTERED CIVIL ENGINEER — 7-15-22 DATE

9-30-22
PLANS APPROVAL DATE

REGISTERED PROFESSIONAL ENGINEER — KIN Y. CHAN No. 55391 Exp. 12-31-22 CIVIL — STATE OF CALIFORNIA

THE STATE OF CALIFORNIA OR ITS OFFICERS OR AGENTS SHALL NOT BE RESPONSIBLE FOR THE ACCURACY OR COMPLETENESS OF SCANNED COPIES OF THIS PLAN SHEET.

Y&C TRANSPORTATION CONSULTANTS, INC.
3250 RAMOS CIRCLE
SACRAMENTO, CA 95827

CITY OF EAST PALO ALTO
1960 TATE STREET
EAST PALO ALTO,
CA 94303

NOTES:

1. PORTLAND CEMENT CONCRETE FLOOR OVER CLEAN CRUSHED ROCK SUMP. BOTTOM OF PULL BOX MUST BE SLOPED TOWARD THE DRAIN PIPE AND SHALL HAVE A SMOOTH FINISH.
2. CONCRETE MUST CONTAIN A MINIMUM OF 550 lb OF PORTLAND CEMENT PER CUBIC YARD.
3. PULL BOX MUST BE PRECAST OF STEEL REINFORCED PORTLAND CEMENT CONCRETE. PULL BOX COVER MUST BE POLYMER CONCRETE. PULL BOX AND COVER MUST SUPPORT MINIMUM TEST LOAD OF 25,000 lb IF BOX IS LOCATED IN TRAVEL WAY, PULL BOX AND COVER MUST CONFORM WITH VERTICAL PROOF LOAD STRENGTH REQUIREMENT, UNDER SECTION 86-1.02(C)3.
4. SEE STANDARD PLAN RSP ES-8A FOR PULL BOX COVER CAPTIVE BOLT AND PULL BOX THREADED INSERT DETAILS.
5. MARK "CALTRANS TOS COMMUNICATIONS" ON THE TOP FACE OF ALL COVERS FOR CALTRANS FIBER OPTIC CABLE SYSTEMS.
6. MINIMUM PULL BOX DEPTH WITH EXTENSION MUST BE 20".
7. CONDUITS MUST ENTER THROUGH KNOCKOUTS. IF MORE THAN 3 CONDUITS ARE REQUIRED IN SAME KNOCKOUT, KNOCKOUT MUST BE WIDENED TO 3/8" MORE THAN THE CONDUIT COMBINATION.
8. CONDUIT FROM THE TYPICAL BORE OR TRENCH SECTION MUST NOT DEFLECT BY MORE THAN 1' PER 10' FROM THE ALIGNMENT PRECEDING OR FOLLOWING THE PULL BOX.
9. BOTTOM OF CONDUIT CENTERLINE MUST BE ALIGNED TO EXIT TOP OF PULL BOX TO FACILITATE CABLE PULLING. IF EXISTING CONDUIT USED, MODIFY CONDUIT (IF NEEDED) AS SHOWN. IF NEW CONDUIT IS USED, INSTALL CONDUIT ELBOW AS SHOWN.
10. PROVIDE PERMANENT MARKERS FOR CONDUIT AND PULL BOXES CONTAINING FIBER OPTIC CABLE.

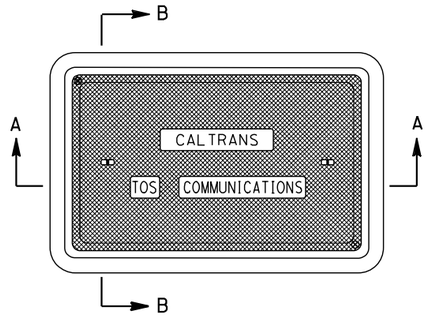

FOR CALTRANS TRAFFIC OPERATIONS SYSTEM

PLAN VIEW

SEE STANDARD PLAN RSP ES-8A COVER TOP VIEW FOR OTHER DETAILS

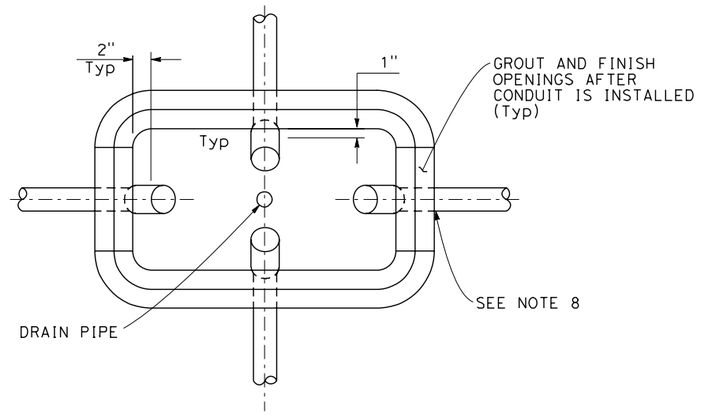

PLAN VIEW WITHOUT COVER

LEGEND: (THIS SHEET ONLY)

(1) 45 DEGREE ELBOW, 3' RADIUS MINIMUM. ELBOW AND COUPLING MAY NOT BE NECESSARY FOR NEW CONDUIT INSTALLED BY DIRECTIONAL BORING. NEW CONDUIT INSTALLED BY DIRECTIONAL BORING MUST ENTER THE PULL BOX WITH BENDING RADIUS OF 3' MINIMUM.

(2) WARNING TAPE (FOR NEW CONDUIT IF INSTALLED BY TRENCHING).

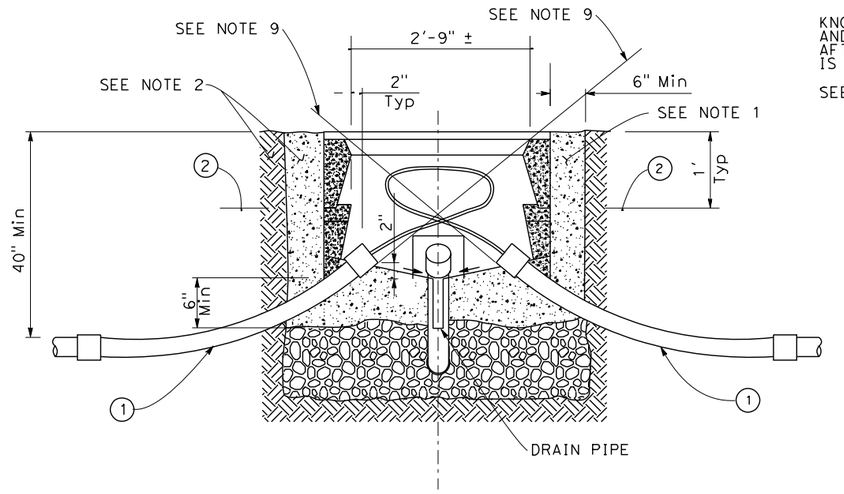

SECTION A-A

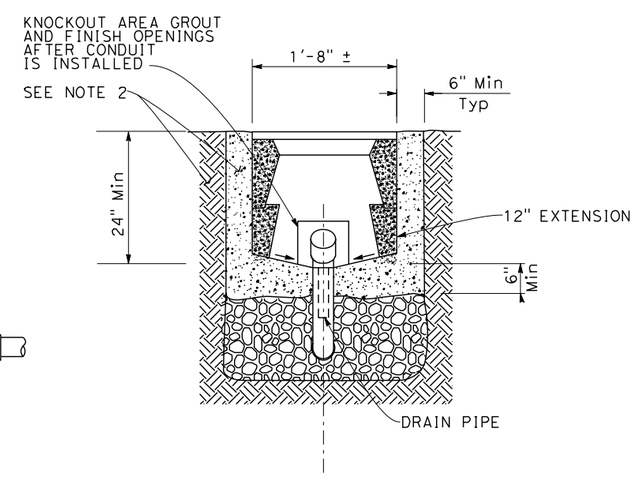

SECTION B-B

ELECTRICAL SYSTEMS DETAILS

NO SCALE

(FIBER OPTIC PULL BOX)

ED-2

REVISED BY	DATE REVISED
MY	07-15-22

MENG YANG — CALCULATED-DESIGNED BY
KIN Y. CHAN — CHECKED BY
DAN K. YAU — CONSULTANT FUNCTIONAL SUPERVISOR

STATE OF CALIFORNIA - DEPARTMENT OF TRANSPORTATION

LAST REVISION 07-15-22
DATE PLOTTED => 7/6/2022
TIME PLOTTED => 3:54:52 PM

BORDER LAST REVISED 7/2/2010 | USERNAME => myang | DGN FILE => ED-2 | RELATIVE BORDER SCALE IS IN INCHES 0 1 2 3 | UNIT 0703 | PROJECT NUMBER & PHASE 04000007591

Dist	COUNTY	ROUTE	POST MILES TOTAL PROJECT	SHEET No.	TOTAL SHEETS
04	SM	101	0.8/1.1	107	136

REGISTERED CIVIL ENGINEER — 7-15-22 DATE

9-30-22
PLANS APPROVAL DATE

REGISTERED PROFESSIONAL ENGINEER
KIN Y. CHAN
No. 55391
Exp. 12-31-22
CIVIL
STATE OF CALIFORNIA

THE STATE OF CALIFORNIA OR ITS OFFICERS OR AGENTS SHALL NOT BE RESPONSIBLE FOR THE ACCURACY OR COMPLETENESS OF SCANNED COPIES OF THIS PLAN SHEET.

Y&C TRANSPORTATION CONSULTANTS, INC.
3250 RAMOS CIRCLE
SACRAMENTO, CA 95827

CITY OF EAST PALO ALTO
1960 TATE STREET
EAST PALO ALTO,
CA 94303

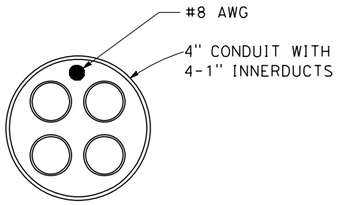

TYPE A

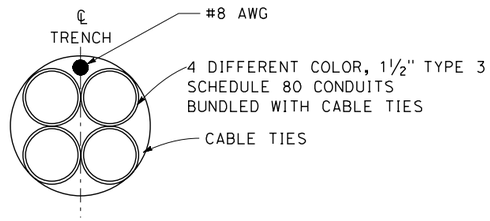

TYPE B

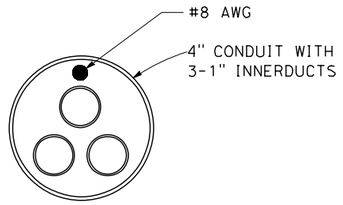

TYPE C

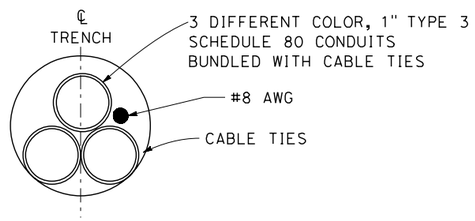

TYPE D

MULTI CONDUIT (Typ)
DETAIL A

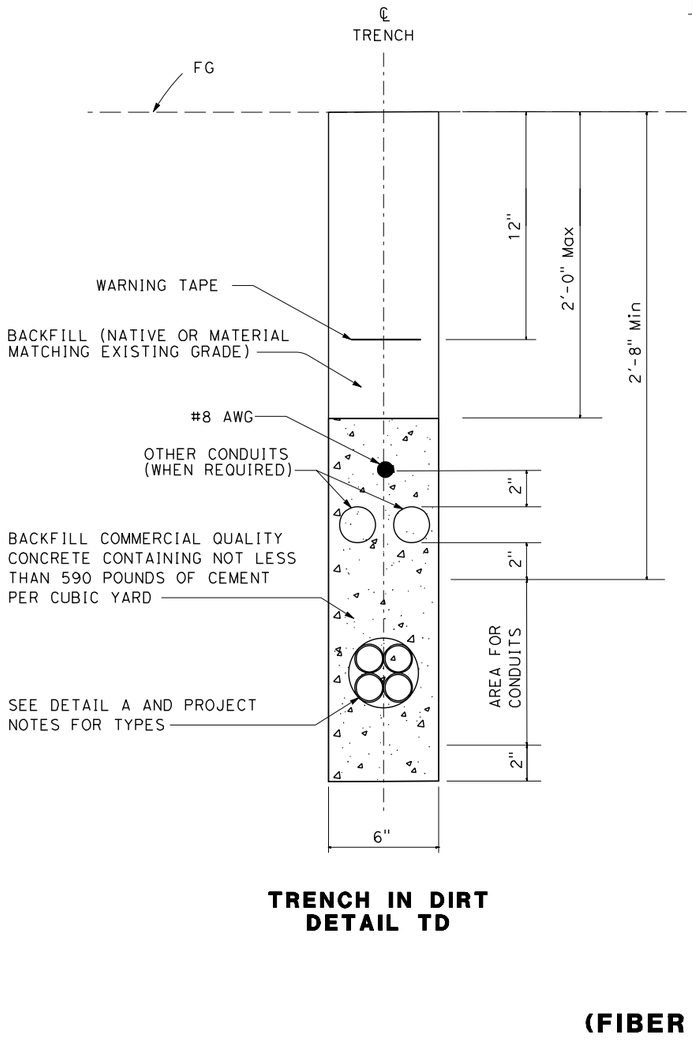

TRENCH IN DIRT
DETAIL TD

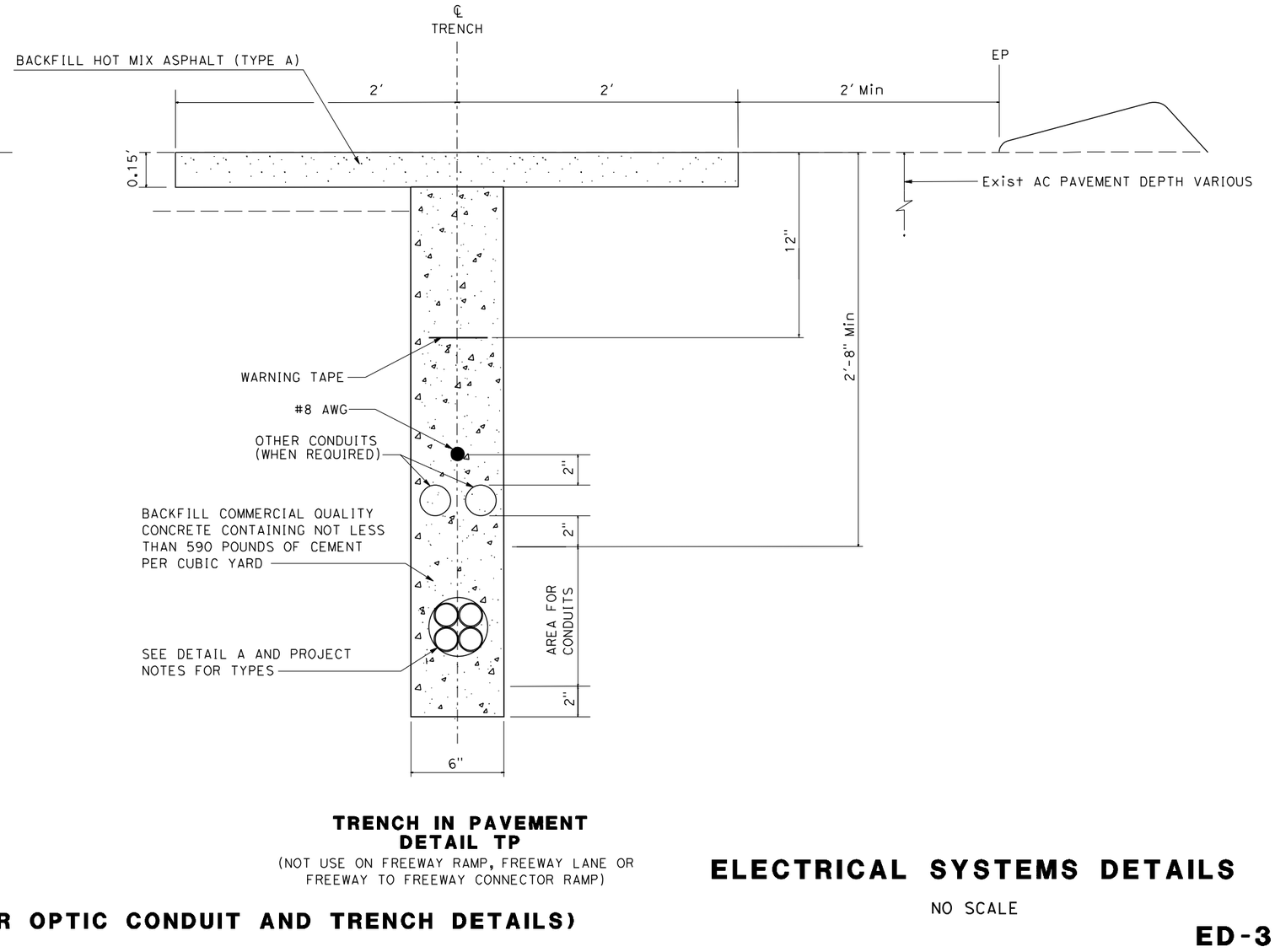

TRENCH IN PAVEMENT
DETAIL TP
(NOT USE ON FREEWAY RAMP, FREEWAY LANE OR FREEWAY TO FREEWAY CONNECTOR RAMP)

(FIBER OPTIC CONDUIT AND TRENCH DETAILS)

ELECTRICAL SYSTEMS DETAILS

NO SCALE

ED-3

REVISED BY	DATE REVISED
MY	07-15-22

CALCULATED-DESIGNED BY: MENG YANG
CHECKED BY: KIN Y. CHAN
CONSULTANT FUNCTIONAL SUPERVISOR: DAN K. YAU
STATE OF CALIFORNIA - DEPARTMENT OF TRANSPORTATION
Caltrans

LAST REVISION 07-15-22
DATE PLOTTED => 7/6/2022
TIME PLOTTED => 3:54:56 PM

BORDER LAST REVISED 7/2/2010
USERNAME => myang
DGN FILE => ED-3
RELATIVE BORDER SCALE IS IN INCHES 0 1 2 3
UNIT 0703
PROJECT NUMBER & PHASE 04000007591

Dist	COUNTY	ROUTE	POST MILES TOTAL PROJECT	SHEET No.	TOTAL SHEETS
04	SM	101	0.8/1.1	108	136

REGISTERED CIVIL ENGINEER — DATE 7-15-22

PLANS APPROVAL DATE 9-30-22

REGISTERED PROFESSIONAL ENGINEER — KIN Y. CHAN No. 55391 Exp. 12-31-22 CIVIL — STATE OF CALIFORNIA

THE STATE OF CALIFORNIA OR ITS OFFICERS OR AGENTS SHALL NOT BE RESPONSIBLE FOR THE ACCURACY OR COMPLETENESS OF SCANNED COPIES OF THIS PLAN SHEET.

Y&C TRANSPORTATION CONSULTANTS, INC.
3250 RAMOS CIRCLE
SACRAMENTO, CA 95827

CITY OF EAST PALO ALTO
1960 TATE STREET
EAST PALO ALTO,
CA 94303

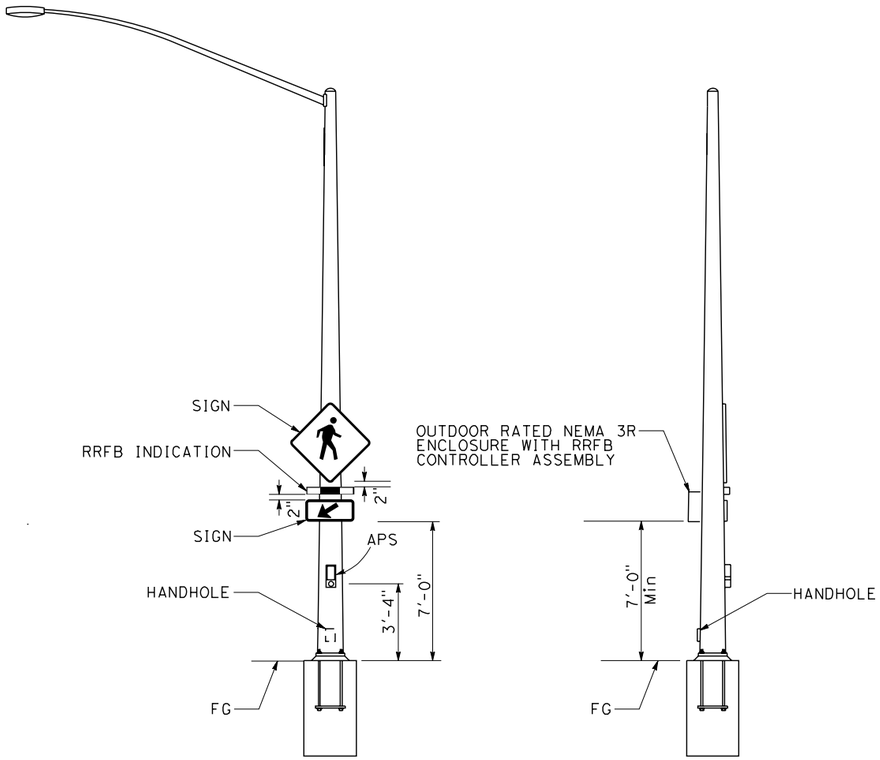

FRONT VIEW — SIDE VIEW

RRFB WITH APS TYPE 15TS STANDARD

DETAIL A

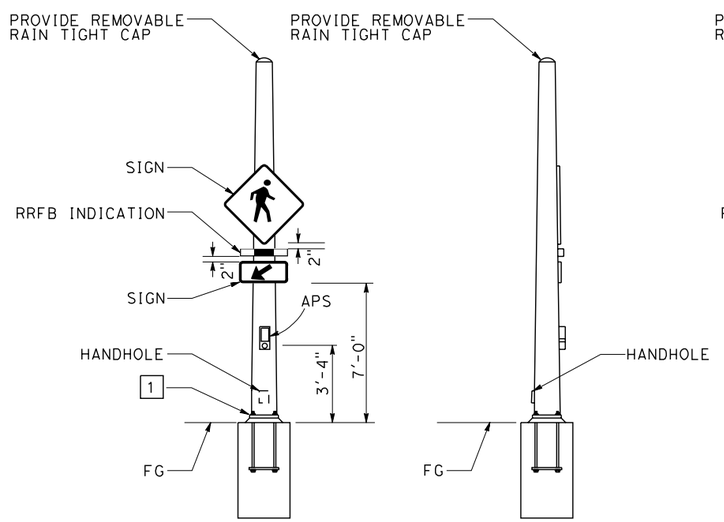

FRONT VIEW — SIDE VIEW

RRFB WITH APS TYPE 15-FBS STANDARD WITH FIXED BASE

DETAIL B

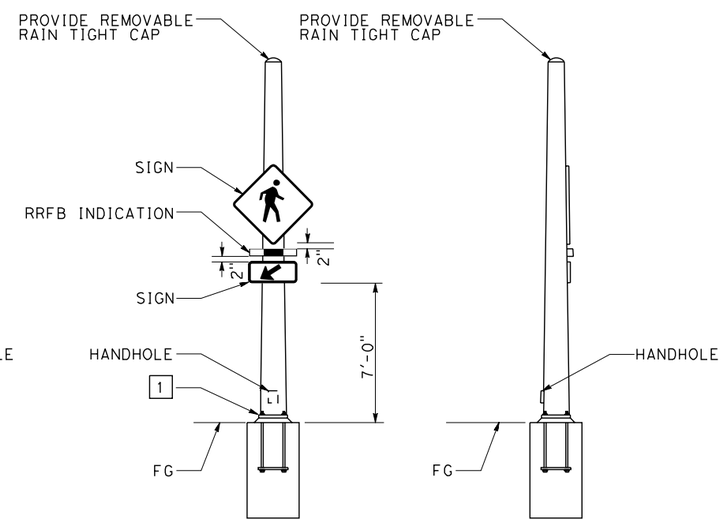

FRONT VIEW — SIDE VIEW

RRFB TYPE 15-FBS STANDARD

DETAIL C

NOTES:
1. SEE SIGNING PLANS FOR SIGNS.
2. FOR ADDITIONAL NOTES, DETAILS AND DATA FOR TYPE 15-FBS STANDARDS, SEE RSP ES-7J.

LEGEND:(THIS SHEET ONLY)

[1] FOR TYPE 15-FBS FIXED BASE, SEE NOTE 2 OF TYPE 30 FIXED BASE ON ES-6E.

ELECTRICAL SYSTEMS DETAILS

NO SCALE

(RRFB DETAILS)

ED-4

REVISED BY	DATE REVISED
MY	07-15-22

CALCULATED-DESIGNED BY: MENG YANG
CHECKED BY: KIN Y. CHAN
CONSULTANT FUNCTIONAL SUPERVISOR: DAN K. YAU

STATE OF CALIFORNIA - DEPARTMENT OF TRANSPORTATION

LAST REVISION 07-15-22 | DATE PLOTTED => 7/6/2022 | TIME PLOTTED => 3:55:09 PM

BORDER LAST REVISED 7/2/2010 | USERNAME => myang | DGN FILE => ED-4 | RELATIVE BORDER SCALE IS IN INCHES 0 1 2 3 | UNIT 0703 | PROJECT NUMBER & PHASE 04000007591

Dist	COUNTY	ROUTE	POST MILES TOTAL PROJECT	SHEET No.	TOTAL SHEETS
04	SM	101	0.8/1.1	109	136

REGISTERED CIVIL ENGINEER — DATE 7-15-22

PLANS APPROVAL DATE 9-30-22

KIN Y. CHAN No. 55391 Exp. 12-31-22 CIVIL — REGISTERED PROFESSIONAL ENGINEER — STATE OF CALIFORNIA

THE STATE OF CALIFORNIA OR ITS OFFICERS OR AGENTS SHALL NOT BE RESPONSIBLE FOR THE ACCURACY OR COMPLETENESS OF SCANNED COPIES OF THIS PLAN SHEET.

Y&C TRANSPORTATION CONSULTANTS, INC.
3250 RAMOS CIRCLE
SACRAMENTO, CA 95827

CITY OF EAST PALO ALTO
1960 TATE STREET
EAST PALO ALTO,
CA 94303

NOTE:

ELECTRICAL SYSTEMS QUANTITY TABLES SUMMARIZE SIGNIFICANT COMPONENTS. SEE ELECTRICAL SYSTEMS PLANS AND SPECIFICATIONS TO DETERMINE ALL MATERIALS NEEDED FOR EACH SYSTEM.

MODIFYING LIGHTING SYSTEMS

SHEET No.	(N) No. 5(T) PB	No. 6(T) PB	Rdwy 12 LED Lum	TYPE 30 POLE WITH 15' LMA AND Fdn	TYPE 31 POLE WITH 20' LMA AND Fdn	1½" TYPE 3 CONDUIT	2" TYPE 3 CONDUIT	#14 AWG	#6 AWG
	EA					LF			
E-4	4	1	2	1	1	150	645	1260	1590

(N) - NOT A SEPARATE BID ITEM

MODIFYING SIGNAL AND LIGHTING SYSTEMS

SHEET No.	(N) LOCATION	No. 5 PB	No. 6 PB	LOOP DETECTOR, TYPE A	LOOP DETECTOR, TYPE D	Rdwy 11 LED Lum	TYPE 29-5-100 POLE WITH 55' SMA, 15' LMA & Fdn	TYPE 29-5-100 POLE WITH 50' SMA, 15' LMA & Fdn	TYPE 19-4-100 POLE WITH 25' SMA, 15' LMA & Fdn	SIGNAL 3-12" (HOUSING, BACKPLATE, LED)	SIGNAL 4-12" (HOUSING, BACKPLATE, LED)	DETECTOR HANDHOLE	SV-1-T M+g	SV-2-TB M+g	2" TYPE 3 CONDUIT	3" TYPE 3 CONDUIT	#14 AWG	#8 AWG	#6 AWG	SIC	DLC
		EA													LF						
E-8	3	6	6	46	13	3	1	1	1	9	1	9	2	2	530	350	3050	300	950	500	4150

(N) - NOT A SEPARATE BID ITEM

MODIFYING FIBER OPTIC CABLE SYSTEMS

SHEET No.	(N) FO PB	1½" TYPE 3 CONDUIT	12-STRAND SMFO CABLE	#8 AWG
	EA	LF		
E-5	1	3260	865	815
E-6	1	1520	525	380
E-10			525	

(N) - NOT A SEPARATE BID ITEM

LIGHTING (CITY STREET)

SHEET No.	(N) No. 5 PB	No. 6 PB	NEMA 4 JUNCTION BOX	PEDESTRIAN LIGHT WITH Std & Fdn	STREET/PEDESTRIAN LIGHT WITH Std & Fdn	LIGHT BOLLARD	½" TYPE 1 CONDUIT	2" TYPE 1 CONDUIT	2" TYPE 3 CONDUIT	#4 AWG
	EA						LF			
E-10	10	2		8	1				900	1800
E-11	9			3	3				1200	2400
E-12			6			42	550	600		1800

(N) - NOT A SEPARATE BID ITEM

ELECTRICAL SYSTEMS QUANTITIES

EQ-1

STATE OF CALIFORNIA - DEPARTMENT OF TRANSPORTATION | Caltrans | CONSULTANT FUNCTIONAL SUPERVISOR: DAN K. YAU | CALCULATED-DESIGNED BY: MENG YANG | CHECKED BY: KIN Y. CHAN | REVISED BY: MY | DATE REVISED: 07-15-22

LAST REVISION 07-15-22 | DATE PLOTTED => 7/6/2022 | TIME PLOTTED => 3:55:12 PM

BORDER LAST REVISED 7/2/2010 | USERNAME => myang | DGN FILE => EQ-1 | RELATIVE BORDER SCALE IS IN INCHES 0 1 2 3 | UNIT 0703 | PROJECT NUMBER & PHASE 04000007591

Dist	COUNTY	ROUTE	POST MILES TOTAL PROJECT	SHEET No.	TOTAL SHEETS
04	SM	101	0.8/1.1	110	136

REGISTERED CIVIL ENGINEER — 7-15-22 DATE

9-30-22 PLANS APPROVAL DATE

KIN Y. CHAN No. 55391 Exp. 12-31-22 CIVIL — REGISTERED PROFESSIONAL ENGINEER — STATE OF CALIFORNIA

THE STATE OF CALIFORNIA OR ITS OFFICERS OR AGENTS SHALL NOT BE RESPONSIBLE FOR THE ACCURACY OR COMPLETENESS OF SCANNED COPIES OF THIS PLAN SHEET.

Y&C TRANSPORTATION CONSULTANTS, INC.
3250 RAMOS CIRCLE
SACRAMENTO, CA 95827

CITY OF EAST PALO ALTO
1960 TATE STREET
EAST PALO ALTO,
CA 94303

NOTE:

ELECTRICAL SYSTEMS QUANTITY TABLES SUMMARIZE SIGNIFICANT COMPONENTS. SEE ELECTRICAL SYSTEMS PLANS AND SPECIFICATIONS TO DETERMINE ALL MATERIALS NEEDED FOR EACH SYSTEM.

SIGNAL AND LIGHTING (CITY STREET LOCATION 1)

SHEET No.	(N) TYPE A LOOP DETECTOR	TYPE D LOOP DETECTOR	DETECTOR HANDHOLE	No. 6 PB	PBA POST AND Fdn	APS	PEDESTRIAN SIGNAL HEAD	3" TYPE 3 CONDUIT	#8 AWG	APS CABLE	SIC	DLC
	EA							LF				
E-14	29	11	8	2	1	6	6	160	190	245	115	160

(N) - NOT A SEPARATE BID ITEM

SIGNAL AND LIGHTING (CITY STREET LOCATION 2)

SHEET No.	(N) 26-4-100 Std AND Fdn	TYPE 15 Std AND Fdn	TYPE 1 Std AND Fdn	PBA POST AND Fdn	TYPE A LOOP DETECTOR	TYPE D LOOP BIKE DETECTOR	Rdwy 11 LED Lum	3-SECTION 12" SIGNAL HEADS	MAS Mtg	SV-2-TA Mtg	SV-1-T Mtg	SP-2-T Mtg	SP-1-T Mtg	TP-2-T Mtg	DETECTOR HANDHOLE	No. 5 PB	No. 6 PB	2" TYPE 3 CONDUIT	3" TYPE 3 CONDUIT	#8 AWG	#10 AWG	#14 AWG	DLC
	EA																	LF					
E-17	1	1	1	3	2	3	1	5	2	1	1	1	3	1	4	1	7	250	550	1350	1800	11050	3000

(N) - NOT A SEPARATE BID ITEM

RECTANGULAR RAPID FLASHING BEACON SYSTEM (CITY)

SHEET No.	(N) RRFB CONTROLLER ASSEMBLY	TYPE 15 Std AND Fdn	TYPE 15-FBS Std AND Fdn	Rdwy 11 LED Lum	RRFB LIGHT BAR	APS	No. 5 PB	No. 5(T) PB	1½" TYPE 3 CONDUIT	#8 AWG	RRFB APS CABLE	RRFB LIGHT BAR CABLE
	EA								LF			
E-19	1	1	3	1	4	2	2	2	260	160	50	200

(N) - NOT A SEPARATE BID ITEM

ELECTRICAL SYSTEMS QUANTITIES

EQ-2

REVISED BY	MY	LAST REVISION	07-15-22
DATE REVISED	07-15-22	DATE PLOTTED => 7/6/2022	
CALCULATED-DESIGNED BY	MENG YANG	TIME PLOTTED => 3:55:13 PM	
CHECKED BY	KIN Y. CHAN		
CONSULTANT FUNCTIONAL SUPERVISOR	DAN K. YAU		
STATE OF CALIFORNIA - DEPARTMENT OF TRANSPORTATION	Caltrans		

BORDER LAST REVISED 7/2/2010 | USERNAME => myang | DGN FILE => EQ-2 | RELATIVE BORDER SCALE IS IN INCHES 0 1 2 3 | UNIT 0703 | PROJECT NUMBER & PHASE 04000007591

DIST	COUNTY	ROUTE	POST MILES TOTAL PROJECT	SHEET No	TOTAL SHEETS
04	SM	101	0.8/1.1	111	136

REGISTERED CIVIL ENGINEER — 08-09-22 DATE

9-30-22
PLANS APPROVAL DATE

The State of California or its officers or agents shall not be responsible for the accuracy or completeness of scanned copies of this plan sheet.

REGISTERED PROFESSIONAL ENGINEER — Jan Hueser — No. C050215 — Exp. 6-30-23 — CIVIL — STATE OF CALIFORNIA

CITY OF EAST PALO ALTO
1960 TATE STREET
EAST PALO ALTO, CA 94303

AECOM
2020 L STREET, SUITE 400
SACRAMENTO, CA 95811

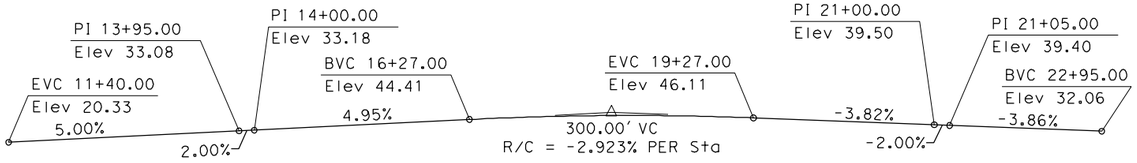

PROFILE GRADE - "P" LINE

NO SCALE

NOTES:

(A) Chain Link Railing (Type 7 modified Vinyl-Clad)
(B) Concrete Barrier, see "Roadway Plans"
(C) MGS, see "Roadway Plans"
(D) Paint "Bridge No. 33-0359", "Bridge Name", and "Year Completed"

1. For "INDEX TO PLANS", "TYPICAL SECTION", and "STANDARD PLANS", see "GENERAL PLAN No. 2" sheet.

LEGEND:

—·—·— Indicates existing structure
⇨ Indicates direction of traffic
◒ Point of minimum vertical clearance

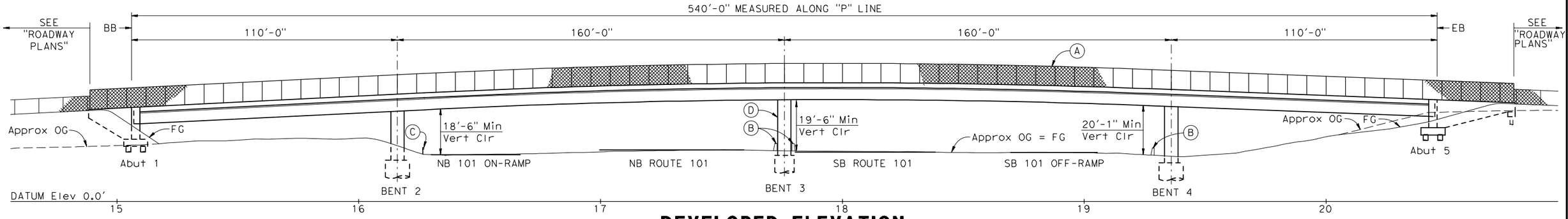

DEVELOPED ELEVATION

1"=20'-0"

CURVE DATA

(A) "P" LINE	(B) "P" LINE	(C) "P" LINE
R = 406.00'	R = 418.00'	R = 166.00'
Δ = 23°12'02"	Δ = 32°21'41"	Δ = 38°57'05"
T = 83.34'	T = 121.29'	T = 58.70'
L = 164.40'	L = 236.09'	L = 112.85'

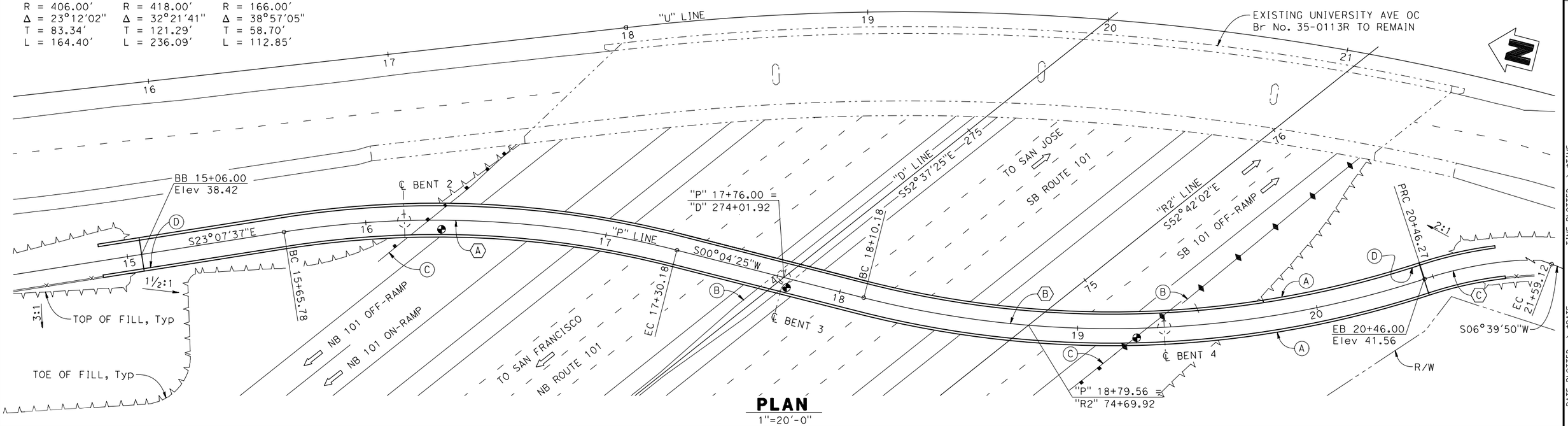

PLAN

1"=20'-0"

DESIGN	BY J. Hueser	CHECKED K. Lee	LOAD & RESISTANCE FACTOR DESIGN	LIVE LOADING: H10 AND PEDESTRIAN DESIGN LOAD			
DETAILS	BY H. Sullivan	CHECKED K. Lee	LAYOUT	BY J. Hueser	CHECKED K. Lee		
QUANTITIES	BY J. Hueser	CHECKED S. Kwong	SPECIFICATIONS	BY D. Harnagel	PLANS AND SPECS COMPARED J. Hueser		

Norbert Gee
DESIGN OVERSIGHT
10/03/2022
SIGN OFF DATE

PREPARED FOR THE STATE OF CALIFORNIA DEPARTMENT OF TRANSPORTATION

Syed Kazmi
PROJECT ENGINEER

BRIDGE NO. 35-0359
POST MILES 0.9

UNIVERSITY AVENUE POC

GENERAL PLAN No. 1

DESIGN GENERAL PLAN SHEET (ENGLISH) (REV. 03/14/12)

ORIGINAL SCALE IN INCHES FOR REDUCED PLANS 0 1 2 3

UNIT: 0743
PROJECT NUMBER & PHASE: 040000007591 CONTRACT No.: 04-272824

DISREGARD PRINTS BEARING EARLIER REVISION DATES →

REVISION DATES				SHEET	OF
08-09-22	11-9-20	10-29-21	03-08-22	1	26

FILE => $REQUEST

USERNAME => $USER DATE PLOTTED => $DATE TIME PLOTTED => $TIME

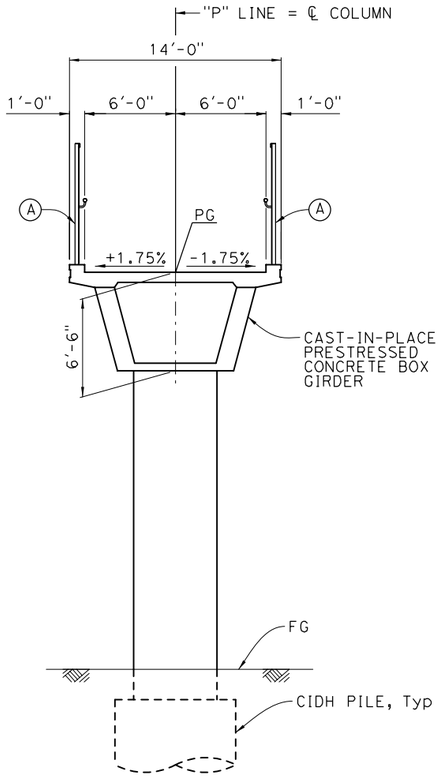

TYPICAL SECTION

1"= 5'-0"
(Bent 2 shown, other bents similar)

NOTES:

(A) Chain Link Railing
(Type 7 Modified Vinyl-Clad)

GENERAL NOTES
LOAD AND RESISTANCE FACTOR DESIGN

DESIGN: AASHTO LRFD Bridge Design Specifications, 6TH Edition and the Caltrans Amendments preface dated January 2014.

SEISMIC DESIGN: Caltrans Seismic Design Criteria (SDC), Version 1.7, April 2013

LIVE LOADING: 90 psf uniform pedestrian load and H 10 maintenance vehicle

SEISMIC LOADING: Site Specific ARS Curve

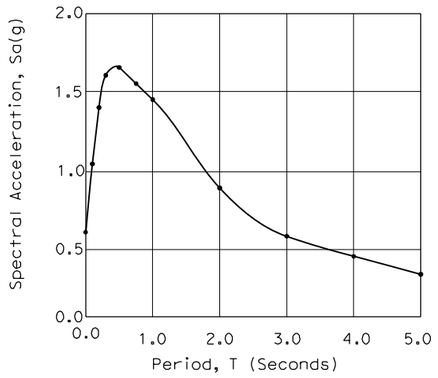

SITE SPECIFIC ARS CURVE

Peak Ground Acceleration = 0.63 g
Moment Magnitude, M_{max} = 7.19
5% Damping
Shear Wave Velocity V_{s30} = 689 ft/s

REINFORCED CONCRETE: fy = 60 ksi
f'c = 3.6 ksi, unless noted otherwise
n = 8

PRESTRESSED CONCRETE: See "Prestressing Notes" on "GIRDER LAYOUT No. 1" sheet

INDEX TO PLANS

SHEET NO.	TITLE
1	GENERAL PLAN No. 1
2	GENERAL PLAN No. 2
3	DECK CONTOURS
4	FOUNDATION PLAN
5	ABUTMENT 1 AND 5 LAYOUT
6	ABUTMENT DETAILS No. 1
7	ABUTMENT DETAILS No. 2
8	ABUTMENT DRAINAGE DETAILS
9	BENT 2 AND 4 LAYOUT
10	BENT 3 LAYOUT
11	BENT 2 AND 4 DETAILS
12	BENT 3 DETAILS
13	TYPICAL SECTION
14	GIRDER LAYOUT No. 1
15	GIRDER LAYOUT No. 2
16	GIRDER DETAILS No. 1
17	GIRDER REINFORCEMENT
18	BRIDGE LIGHTING PLAN
19	STRIP JOINT SEAL ASSEMBLY MAXIMUM MOVEMENT RATING = 4"
20	JOINT ARMOR FOR PEDESTRIAN WALKWAYS
21	CHAIN LINK RAILING (TYPE 7 MODIFIED VINYL-CLAD) DETAILS No. 1
22	CHAIN LINK RAILING (TYPE 7 MODIFIED VINYL-CLAD) DETAILS No. 2
23	LOG OF TEST BORINGS 1 OF 4
24	LOG OF TEST BORINGS 2 OF 4
25	LOG OF TEST BORINGS 3 OF 4
26	LOG OF TEST BORINGS 4 OF 4

LEGEND:

- Structural Concrete, Bridge (Polymer Fiber) (f'c = 5.0 ksi @ 28 days)
- Structural Concrete, Bridge (f'c = 5.0 ksi @ 28 days)
- Structural Concrete, Bridge, see "GIRDER LAYOUT" sheet
- Structural Concrete No. 1, Bridge Footing
- Cast-In-Drilled-Hole Concrete Pile (f'c = 4.0 ksi @ 28 days)

DIST	COUNTY	ROUTE	POST MILES TOTAL PROJECT	SHEET No	TOTAL SHEETS
04	SM	101	0.8/1.1	112	136

Jan M Hueser 08-09-22
REGISTERED CIVIL ENGINEER DATE

9-30-22
PLANS APPROVAL DATE

REGISTERED PROFESSIONAL ENGINEER — Jan Hueser — No. C050215 — Exp. 6-30-23 — CIVIL — STATE OF CALIFORNIA

The State of California or its officers or agents shall not be responsible for the accuracy or completeness of scanned copies of this plan sheet.

CITY OF EAST PALO ALTO
1960 TATE STREET
EAST PALO ALTO, CA 94303

AECOM
2020 L STREET, SUITE 400
SACRAMENTO, CA 95811

STANDARD PLANS DATED 2018

	A3A	ABBREVIATIONS (SHEET 1 OF 3)
	A3B	ABBREVIATIONS (SHEET 2 OF 3)
	A3C	ABBREVIATIONS (SHEET 3 OF 3)
	A10A	LEGEND-LINES AND SYMBOLS (SHEET 1 OF 5)
	A10B	LEGEND-LINES AND SYMBOLS (SHEET 2 OF 5)
	A10C	LEGEND-LINES AND SYMBOLS (SHEET 3 OF 5)
	A10D	LEGEND-LINES AND SYMBOLS (SHEET 4 OF 5)
	A10E	LEGEND-LINES AND SYMBOLS (SHEET 5 OF 5)
	A10F	LEGEND-SOIL (SHEET 1 OF 2)
	A10G	LEGEND-SOIL (SHEET 2 OF 2)
	A62C	LIMITS OF PAYMENT FOR EXCAVATION AND BACKFILL-BRIDGE
RSP	B0-1	BRIDGE DETAILS
RSP	B0-3	BRIDGE DETAILS
	B0-5	BRIDGE DETAILS
	B0-13	BRIDGE DETAILS
	B2-3	16" AND 24" CAST-IN-DRILLED-HOLE CONCRETE PILE
	B7-1	BOX GIRDER DETAILS
	B8-5	CAST-IN-PLACE POST-TENSIONED GIRDER DETAILS
RSP	ES-9A	ELECTRICAL SYSTEMS (STRUCTURE PULL BOX INSTALLATIONS)
	ES-9B	ELECTRICAL SYSTEMS (CONDUIT RISER AND EXPANSION FITTING, STRUCTURE INSTALLATIONS)
RSP	ES-9C	ELECTRICAL SYSTEMS (STRUCTURE PULL BOX)
RSP	ES-9D	ELECTRICAL SYSTEMS (STRUCTURE PULL BOX INSTALLATIONS)

STANDARD PLAN SHEET NO.
DETAIL NO.

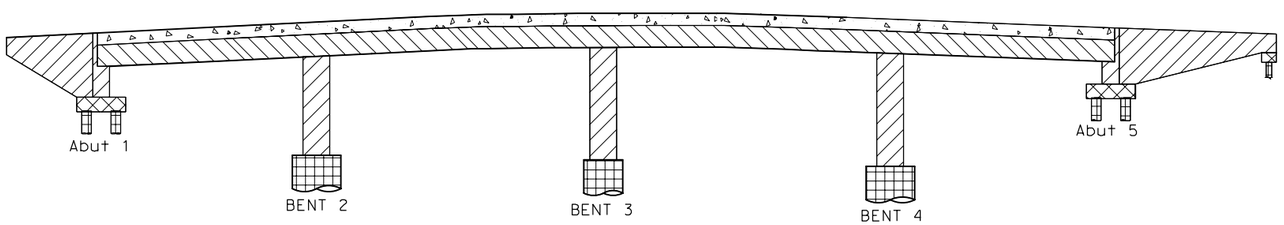

CONCRETE STRENGTH AND TYPE LIMITS

NO SCALE

QUANTITIES

Structure Excavation (Bridge)	167	CY
Structure Backfill (Bridge)	133	CY
24" Cast-In-Drilled-Hole Concrete Piling	525	LF
96" Cast-In-Drilled-Hole Concrete Piling	362	LF
Prestressing Cast-In-Place Concrete	1	LS
Structural Concrete, Bridge Footing	38	CY
Structural Concrete, Bridge	520	CY
Structural Concrete Bridge (Polymer Fiber)	221	CY
Joint Seal Assembly (MR 3½")	28	LF
Bar Reinforcing Steel (Bridge)	364,384	LB
Headed Bar Reinforcement	10	EA
Miscellaneous Metal (Bridge)	860	LB
Chain Link Railing (Type 7 modified Vinyl-Clad)	1,177	LF

Norbert Gee
DESIGN OVERSIGHT
10/03/2022
SIGN OFF DATE

	BY	CHECKED
DESIGN	J. Hueser	K. Lee
DETAILS	H. Sullivan	K. Lee
QUANTITIES	J. Hueser	S. Kwong

LOAD & RESISTANCE FACTOR DESIGN — LIVE LOADING: H10 AND PEDESTRIAN DESIGN LOAD

	BY	CHECKED
LAYOUT	J. Hueser	K. Lee
SPECIFICATIONS	D. Harnagel	PLANS AND SPECS COMPARED J. Hueser

PREPARED FOR THE STATE OF CALIFORNIA DEPARTMENT OF TRANSPORTATION

Syed Kazmi
PROJECT ENGINEER

BRIDGE NO. 35-0359
POST MILES 0.9

UNIVERSITY AVENUE POC
GENERAL PLAN No. 2

DESIGN GENERAL PLAN SHEET (ENGLISH) (REV. 03/14/12)

ORIGINAL SCALE IN INCHES FOR REDUCED PLANS 0 1 2 3

UNIT: 0743
PROJECT NUMBER & PHASE: 04000007591 CONTRACT No.: 04-272824

DISREGARD PRINTS BEARING EARLIER REVISION DATES →

REVISION DATES				SHEET	OF
08-09-22	11-9-20	10-29-21	03-08-22	2	26

FILE => $REQUEST

USERNAME => $USER DATE PLOTTED => $DATE TIME PLOTTED => $TIME

DIST	COUNTY	ROUTE	POST MILES TOTAL PROJECT	SHEET No	TOTAL SHEETS
04	SM	101	0.8/1.1	113	136

Jan M Hueser 08-09-22
REGISTERED CIVIL ENGINEER DATE

9-30-22
PLANS APPROVAL DATE

REGISTERED PROFESSIONAL ENGINEER
Jan Hueser
No. C050215
Exp. 6-30-23
CIVIL
STATE OF CALIFORNIA

The State of California or its officers or agents shall not be responsible for the accuracy or completeness of scanned copies of this plan sheet.

CITY OF EAST PALO ALTO
1960 TATE STREET
EAST PALO ALTO, CA 94303

AECOM
2020 L STREET, SUITE 400
SACRAMENTO, CA 95811

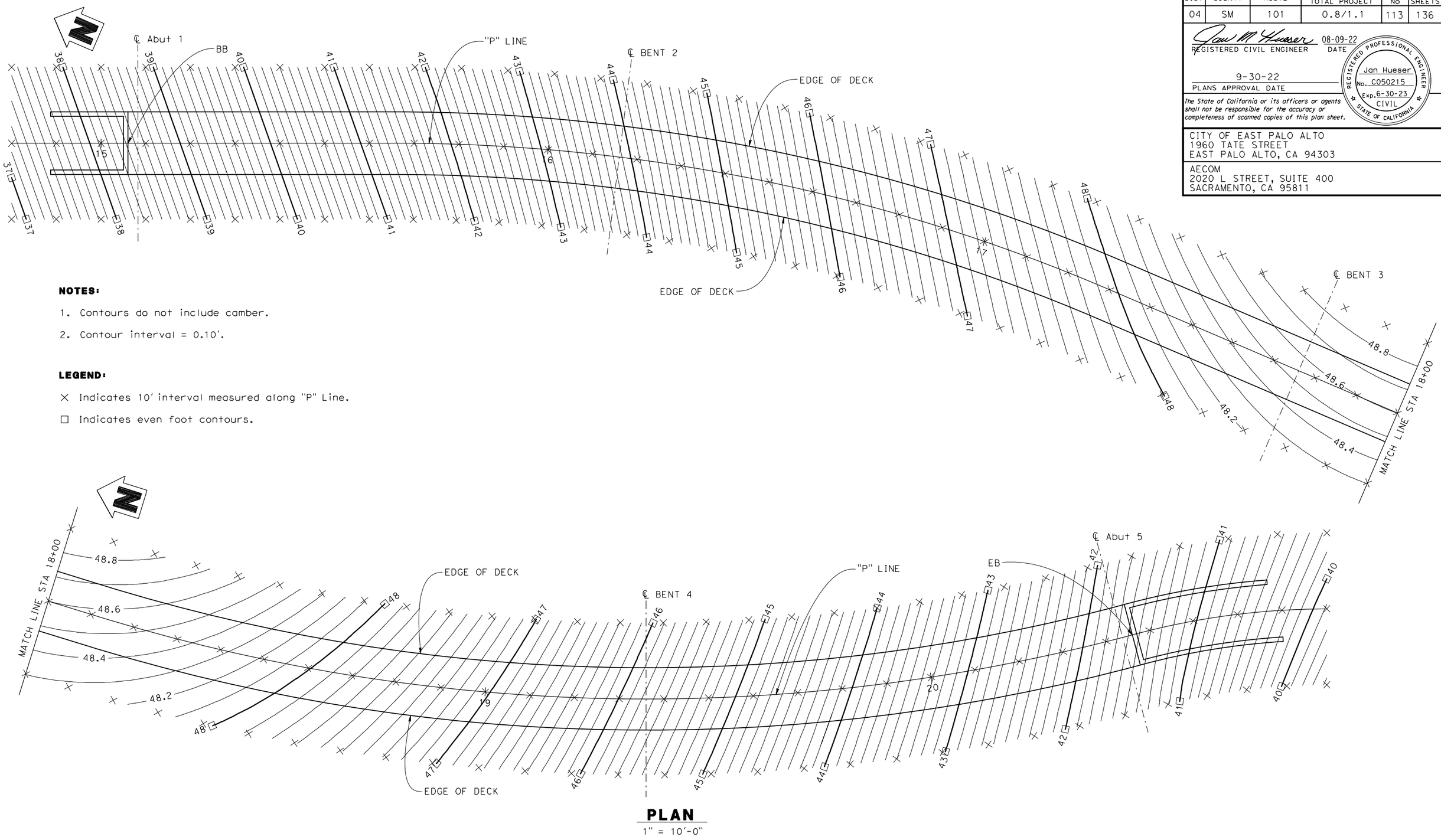

NOTES:

1. Contours do not include camber.
2. Contour interval = 0.10'.

LEGEND:

× Indicates 10' interval measured along "P" Line.

□ Indicates even foot contours.

PLAN
1" = 10'-0"

Norbert Gee
DESIGN OVERSIGHT
10/03/2022
SIGN OFF DATE

DESIGN DETAIL SHEET (ENGLISH) (REV. 03/14/12)

DESIGN	BY J. Hueser	CHECKED K. Lee	
DETAILS	BY H. Sullivan	CHECKED K. Lee	
QUANTITIES	BY J. Hueser	CHECKED S. Kwong	

ORIGINAL SCALE IN INCHES FOR REDUCED PLANS 0 1 2 3

PREPARED FOR THE STATE OF CALIFORNIA DEPARTMENT OF TRANSPORTATION

Syed Kazmi
PROJECT ENGINEER

BRIDGE NO.	
35-0359	
POST MILES	
0.9	

UNIVERSITY AVENUE POC
DECK CONTOURS

UNIT: 0743
PROJECT NUMBER & PHASE: 04000007591 CONTRACT No.: 04-272824

DISREGARD PRINTS BEARING EARLIER REVISION DATES →

REVISION DATES				SHEET	OF
08-09-22	11-9-20	10-29-21	03-08-22	3	26

FILE => $REQUEST

USERNAME => $USER DATE PLOTTED => $DATE TIME PLOTTED => $TIME

DIST	COUNTY	ROUTE	POST MILES TOTAL PROJECT	SHEET No	TOTAL SHEETS
04	SM	101	0.8/1.1	114	136

Jan M Hueser 08-09-22
REGISTERED CIVIL ENGINEER DATE

9-30-22
PLANS APPROVAL DATE

The State of California or its officers or agents shall not be responsible for the accuracy or completeness of scanned copies of this plan sheet.

REGISTERED PROFESSIONAL ENGINEER — Jan Hueser — No. C050215 — Exp. 6-30-23 — CIVIL — STATE OF CALIFORNIA

CITY OF EAST PALO ALTO
1960 TATE STREET
EAST PALO ALTO, CA 94303

AECOM
2020 L STREET, SUITE 400
SACRAMENTO, CA 95811

PILE DATA TABLE

LOCATION	PILE TYPE	NOMINAL RESISTANCE (kips)		DESIGN TIP ELEVATION (ft)	SPECIFIED TIP ELEVATION (ft)	SPECIFIED STEEL CASING TIP ELEVATION (ft)
		COMPRESSION	TENSION			
Abut 1	24"ø CIDH	230	0	-15(A), 4(C), 1(D)	-15	NA
BENT 2	96"ø CIDH WITH PERMANENT STEEL CASING	1,830	0	-74(A), -120(C), -13(D)	-120	0
BENT 3	96"ø CIDH WITH PERMANENT STEEL CASING	1,940	0	-76(A), -95(C), -15(D)	-95	8
BENT 4	96"ø CIDH WITH PERMANENT STEEL CASING	1,840	0	-74(A), -106(C), -13(D)	-106	0
Abut 5	24"ø CIDH	250	0	-15(A), 9(C), 0(D)	-15	NA
Abut 5 WW Lt	24"ø CIDH	60	0	12(A)	12	NA
Abut 5 WW Rt	24"ø CIDH	60	0	12(A)	12	NA

DESIGN TIP ELEVATION IS CONTROLLED BY THE FOLLOWING DEMANDS:
(A) COMPRESSION, (B) TENSION, (C) LATERAL, (D) SETTLEMENT.

BENCH MARK

BENCH MARK	N	E	ELEV	DESCRIPTION
93	1995150	6085242	17.32	MAG NAIL AND SHINER IN AC @ SE CORNER OF UNIVERSITY AVE AND WOODLAND AVE, NEXT TO "NO PED CROSSING" SIGN
92	1993359	6085190	33.63	CUT "X" IN SIDEWALK @ NE CORNER OF UNIVERSITY AVE AND DONOHOE STREET

SURVEY CONTROL
HORIZONTAL CONTROL FOR THIS SURVEY IS BASED ON THE CALIFORNIA COORDINATE SYSTEM, ZONE 3, US SURVEY FEET, NORTH AMERICAN DATUM OF 1983 (NAD83 2007),
VERTICAL CONTROL IS THE NORTH AMERICAN VERTICAL DATUM (NAVD88 RCFCD).

CURVE DATA

CURVE	R	Δ	T	L
(A)	406.00′	23°12′02"	83.34′	164.40′
(B)	418.00′	32°21′41"	121.29′	236.09′
(C)	166.00′	38°57′05"	58.70′	112.85′

LEGEND:
- Indicates existing structure
- Indicates CIDH Pile
- Indicates bottom of footing elevation
- Approximate location of Settlement Monitoring Point

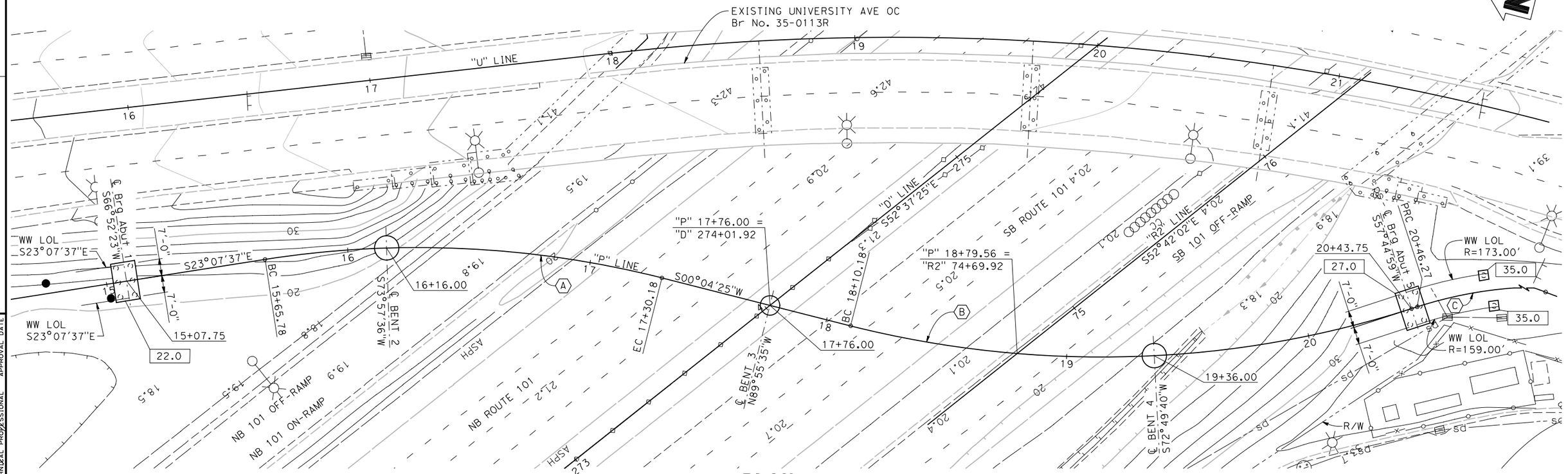

PLAN

Norbert Gee DESIGN OVERSIGHT 10/03/2022 SIGN OFF DATE	SCALE: 1"=20'-0"	VERT.DATUM	HORZ.DATUM	DESIGN	BY J. Hueser / CHECKED K. Lee
	PHOTOGRAMMETRY AS OF:	ALIGNMENT TIES		DETAILS	BY H. Sullivan / CHECKED K. Lee
	SURVEYED BY B. Coleson	DRAFTED BY C. Semera		QUANTITIES	BY J. Hueser / CHECKED S. Kwong
	FIELD CHECKED BY D. Scott	CHECKED BY D. Scott			

PREPARED FOR THE STATE OF CALIFORNIA DEPARTMENT OF TRANSPORTATION

Syed Kazmi
PROJECT ENGINEER

BRIDGE NO.	POST MILES
35-0359	0.9

UNIVERSITY AVENUE POC
FOUNDATION PLAN

FOUNDATION PLAN SHEET (ENGLISH) (REV. 03/14/12)

ORIGINAL SCALE IN INCHES FOR REDUCED PLANS 0 1 2 3

UNIT: 0743
PROJECT NUMBER & PHASE: 040000007591 CONTRACT No.: 04-272824

DISREGARD PRINTS BEARING EARLIER REVISION DATES →

REVISION DATES				SHEET	OF
08-09-22	11-9-20	10-29-21	03-08-22	4	26

FILE => $REQUEST

11-9-20 APPROVAL DATE — GEOTECHNICAL PROFESSIONAL

USERNAME => $USER DATE PLOTTED => $DATE TIME PLOTTED => $TIME

DIST	COUNTY	ROUTE	POST MILES TOTAL PROJECT	SHEET No	TOTAL SHEETS
04	SM	101	0.8/1.1	115	136

Jan M Hueser 08-09-22
REGISTERED CIVIL ENGINEER DATE

9-30-22
PLANS APPROVAL DATE

REGISTERED PROFESSIONAL ENGINEER — Jan Hueser — No. C050215 — Exp. 6-30-23 — CIVIL — STATE OF CALIFORNIA

The State of California or its officers or agents shall not be responsible for the accuracy or completeness of scanned copies of this plan sheet.

CITY OF EAST PALO ALTO
1960 TATE STREET
EAST PALO ALTO, CA 94303

AECOM
2020 L STREET, SUITE 400
SACRAMENTO, CA 95811

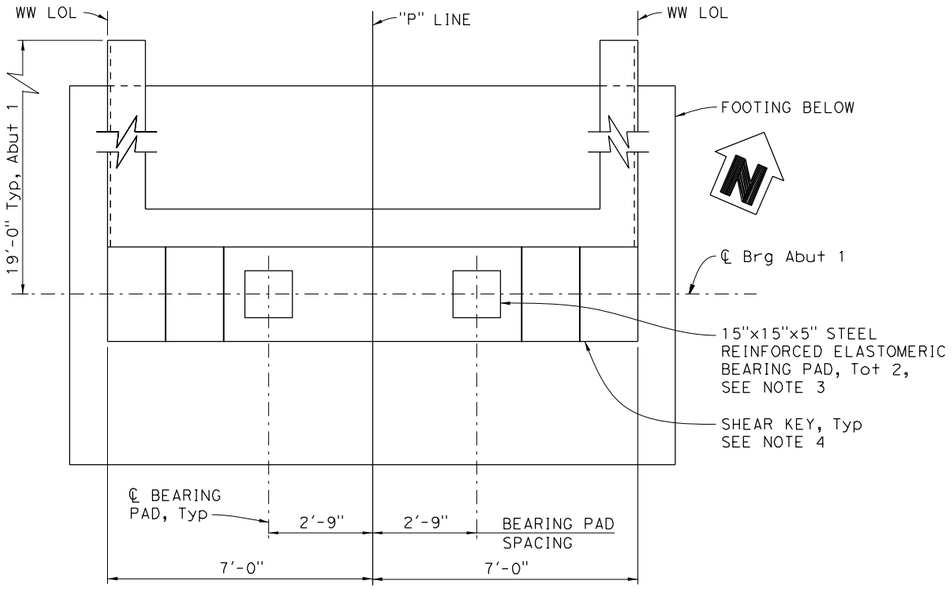

PLAN

½"= 1'-0"
(Abutment 1 shown, Abutment 5 similar.)

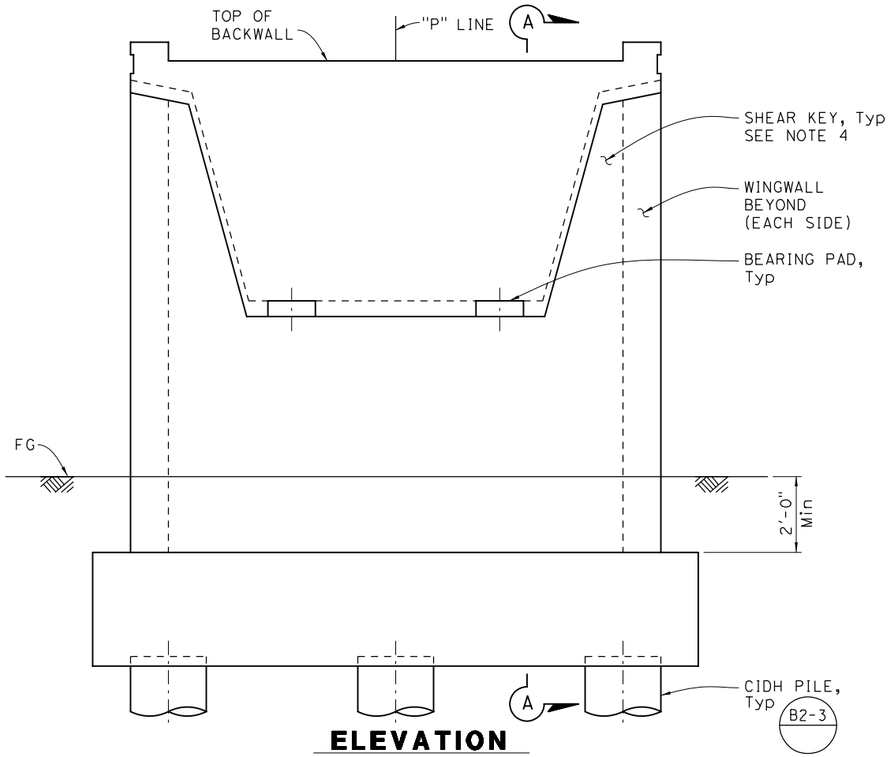

ELEVATION

½"= 1'-0"

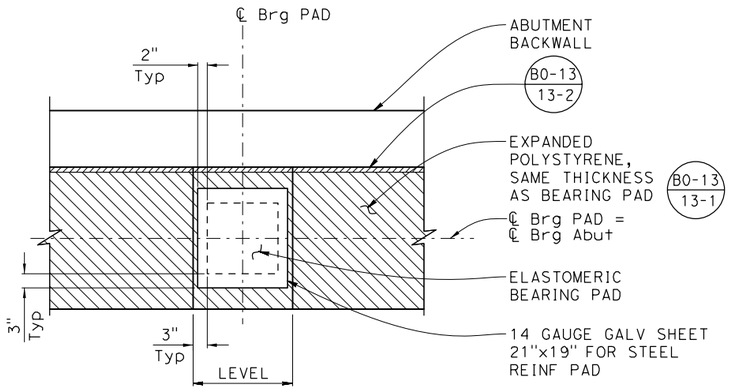

PLAN

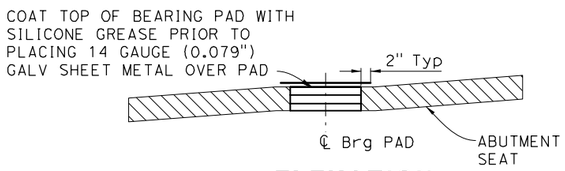

ELEVATION

BEARING PAD DETAILS

NO SCALE

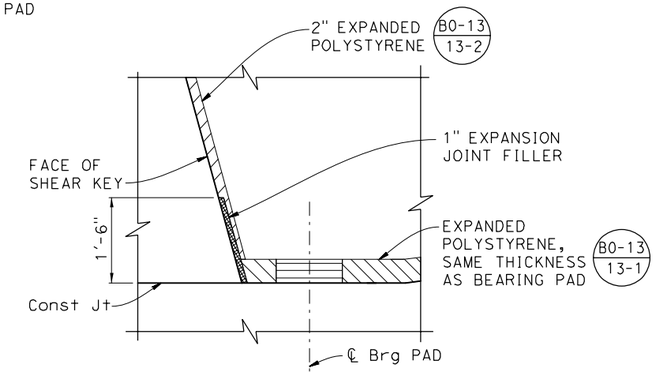

EXPANSION JOINT FILLER DETAIL

3/4"= 1'-0"

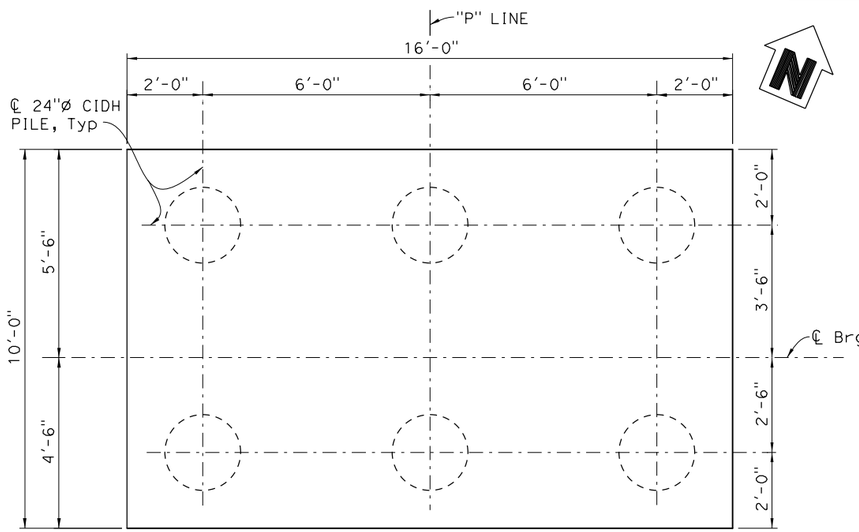

FOOTING PLAN

½"= 1'-0"

NOTES:

1. For SECTION A-A, see "ABUTMENT DETAILS No. 1" sheet.
2. For Wingwall details, see "ABUTMENT DETAILS No. 2" sheet.
3. Indicated pad thickness is for elastomer only.
4. For Shear Key Detail, see "ABUTMENT DETAILS No. 1" sheet.

Norbert Gee
DESIGN OVERSIGHT
10/03/2022
SIGN OFF DATE

	BY	CHECKED
DESIGN	J. Hueser	K. Lee
DETAILS	H. Sullivan	K. Lee
QUANTITIES	J. Hueser	S. Kwong

PREPARED FOR THE STATE OF CALIFORNIA DEPARTMENT OF TRANSPORTATION

Syed Kazmi
PROJECT ENGINEER

BRIDGE NO. 35-0359
POST MILES 0.9

UNIVERSITY AVENUE POC
ABUTMENT 1 AND 5 LAYOUT

DESIGN DETAIL SHEET (ENGLISH) (REV. 03/14/12)

ORIGINAL SCALE IN INCHES FOR REDUCED PLANS 0 1 2 3

UNIT: 0743
PROJECT NUMBER & PHASE: 04000007591 CONTRACT No.: 04-272824

DISREGARD PRINTS BEARING EARLIER REVISION DATES →

REVISION DATES				SHEET	OF
08-09-22	11-9-20	10-29-21	03-08-22	5	26

FILE => $REQUEST

USERNAME => $USER DATE PLOTTED => $DATE TIME PLOTTED => $TIME

DIST	COUNTY	ROUTE	POST MILES TOTAL PROJECT	SHEET No	TOTAL SHEETS
04	SM	101	0.8/1.1	116	136

Jan M Hueser 08-09-22
REGISTERED CIVIL ENGINEER DATE

9-30-22
PLANS APPROVAL DATE

The State of California or its officers or agents shall not be responsible for the accuracy or completeness of scanned copies of this plan sheet.

REGISTERED PROFESSIONAL ENGINEER — Jan Hueser — No. C050215 — Exp. 6-30-23 — CIVIL — STATE OF CALIFORNIA

CITY OF EAST PALO ALTO
1960 TATE STREET
EAST PALO ALTO, CA 94303

AECOM
2020 L STREET, SUITE 400
SACRAMENTO, CA 95811

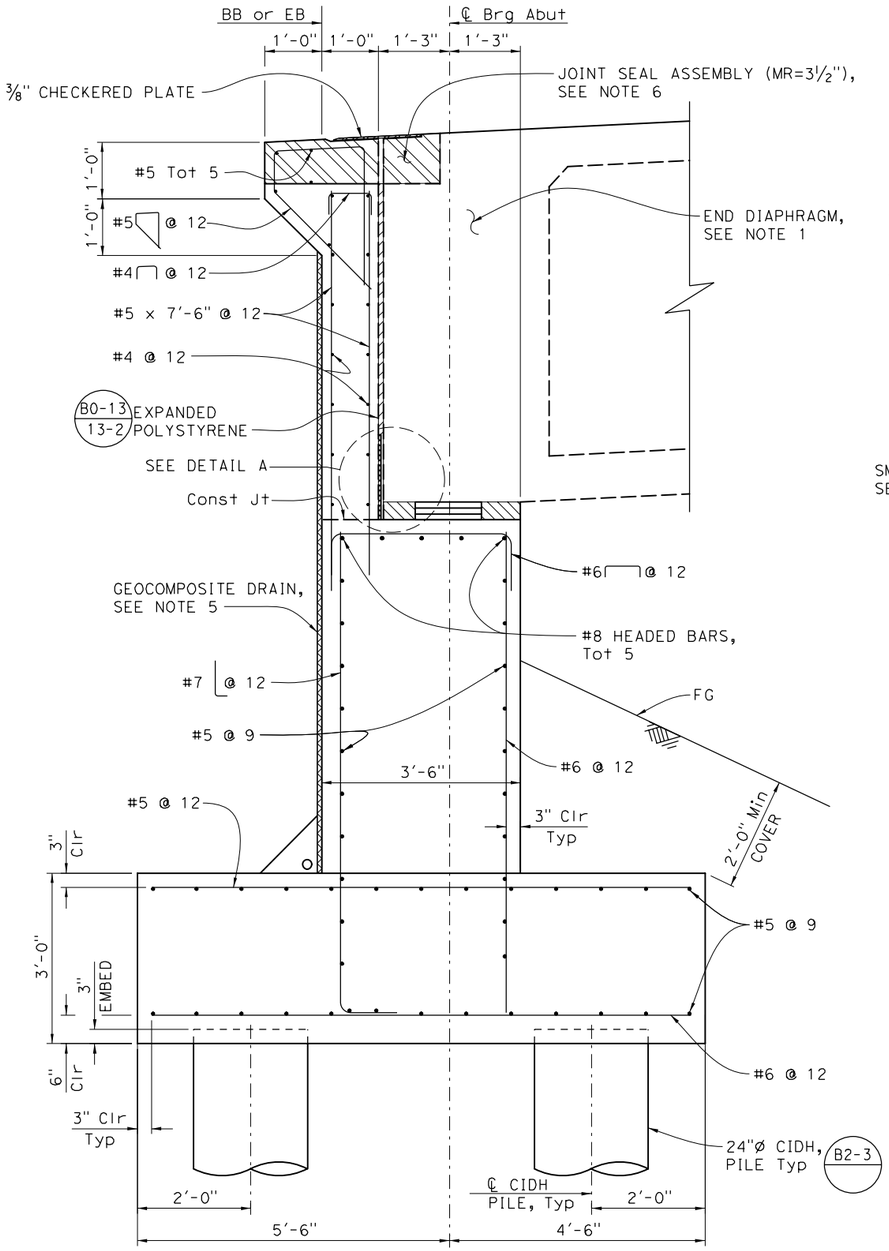

SECTION A-A
3/4"= 1'-0"

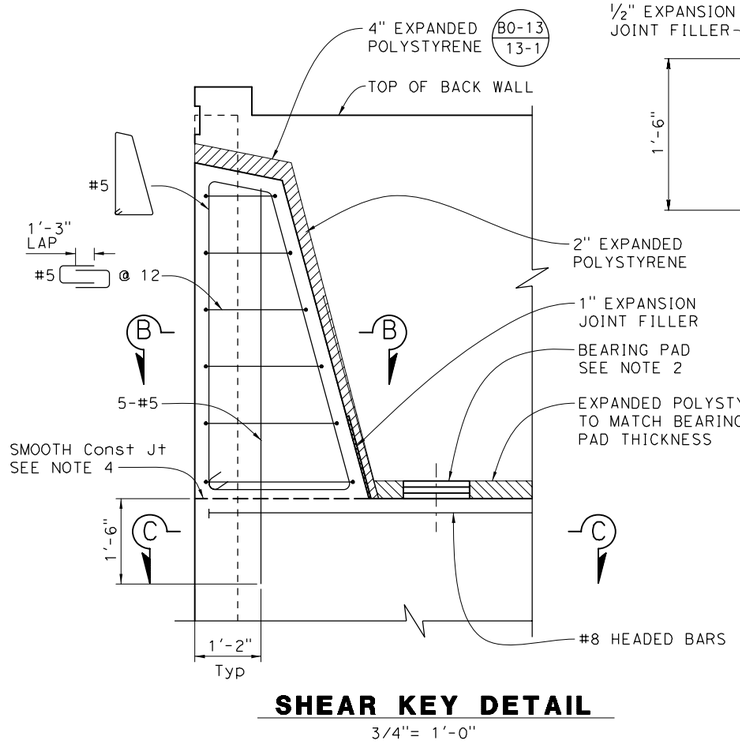

SHEAR KEY DETAIL
3/4"= 1'-0"

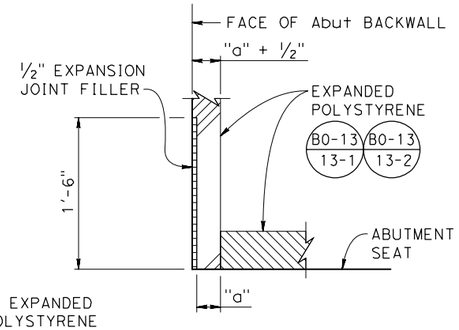

DETAIL A
NO SCALE

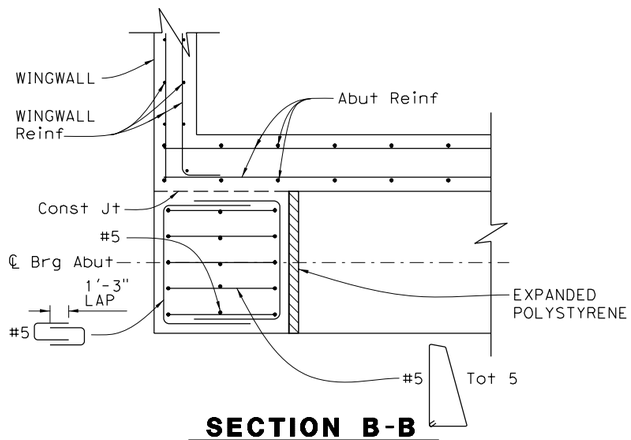

SECTION B-B
3/4"= 1'-0"

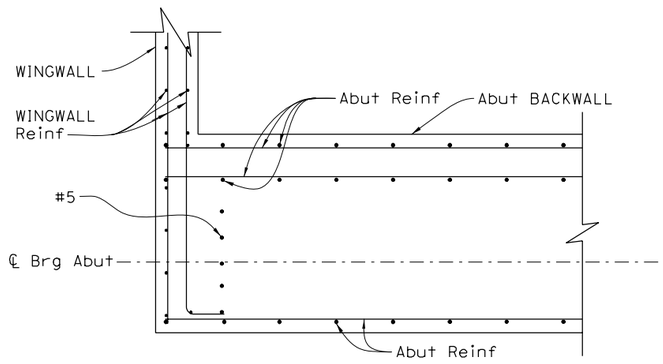

SECTION C-C
3/4"= 1'-0"

NOTES:

1. For End Diaphragm and Slab Reinforcement, see "GIRDER DETAILS No. 1" sheet.
2. For Bearing Pad detail, see "ABUTMENT 1 AND 5 LAYOUT" sheet.
3. For Girder Reinforcement, see "GIRDER REINFORCEMENT" sheet.
4. Smooth construction joints shall have a smooth trowel finish and 2 layers of 15 lb roofing felt.
5. For Geocomposite Drain, see "ABUTMENT DRAINAGE DETAILS" sheet.
6. For Joint Seal Assembly Details, see, "STRIP JOINT SEAL ASSEMBLY, MAXIMUM MOVEMENT RATING = 4", sheet.
7. For Checkered Steel Plate details, see "JOINT ARMOR FOR PEDESTRIAN WALKWAYS" sheet.

Norbert Gee
DESIGN OVERSIGHT
10/03/2022
SIGN OFF DATE

	BY	CHECKED
DESIGN	J. Hueser	K. Lee
DETAILS	H. Sullivan	K. Lee
QUANTITIES	J. Hueser	S. Kwong

PREPARED FOR THE STATE OF CALIFORNIA DEPARTMENT OF TRANSPORTATION

Syed Kazmi
PROJECT ENGINEER

BRIDGE NO. 35-0359
POST MILES 0.9

UNIVERSITY AVENUE POC
ABUTMENT DETAILS No. 1

DESIGN DETAIL SHEET (ENGLISH) (REV. 03/14/12)

ORIGINAL SCALE IN INCHES FOR REDUCED PLANS 0 1 2 3

UNIT: 0743
PROJECT NUMBER & PHASE: 04000007591 CONTRACT No.: 04-272824

DISREGARD PRINTS BEARING EARLIER REVISION DATES →

REVISION DATES				SHEET	OF
08-09-22	11-9-20	10-29-21	03-04-22	6	26

FILE => $REQUEST

USERNAME => $USER DATE PLOTTED => $DATE TIME PLOTTED => $TIME

DIST	COUNTY	ROUTE	POST MILES TOTAL PROJECT	SHEET No	TOTAL SHEETS
04	SM	101	0.8/1.1	117	136

Jan M Hueser 08-09-22
REGISTERED CIVIL ENGINEER DATE

9-30-22
PLANS APPROVAL DATE

The State of California or its officers or agents shall not be responsible for the accuracy or completeness of scanned copies of this plan sheet.

REGISTERED PROFESSIONAL ENGINEER — Jan Hueser — No. C050215 — Exp. 6-30-23 — CIVIL — STATE OF CALIFORNIA

CITY OF EAST PALO ALTO
1960 TATE STREET
EAST PALO ALTO, CA 94303

AECOM
2020 L STREET, SUITE 400
SACRAMENTO, CA 95811

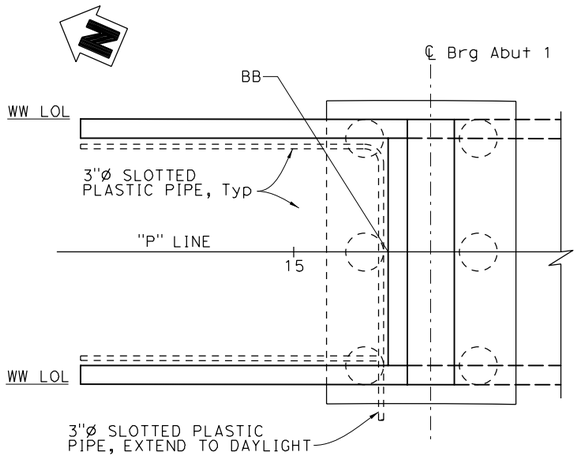

PLAN - ABUTMENT 1
1/4"= 1'-0"

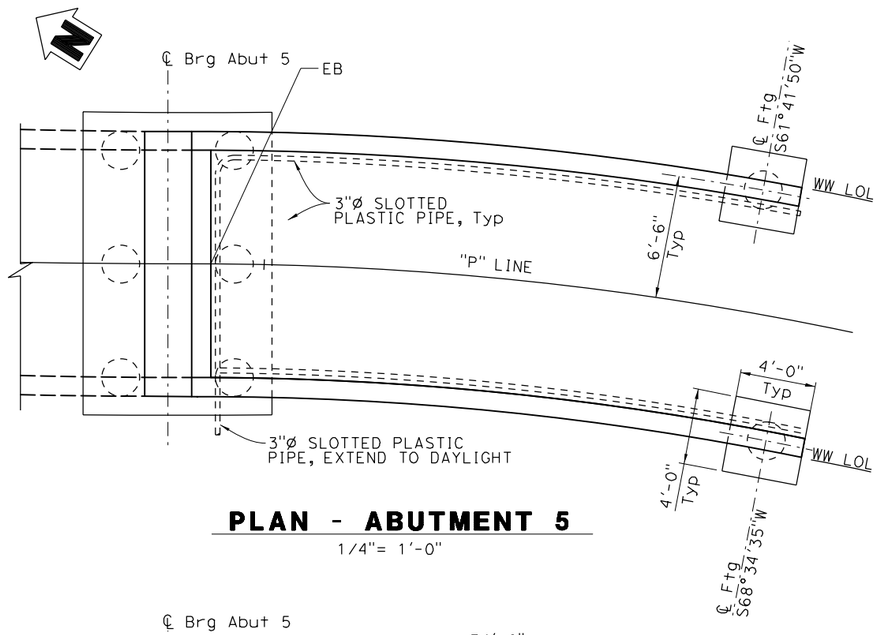

PLAN - ABUTMENT 5
1/4"= 1'-0"

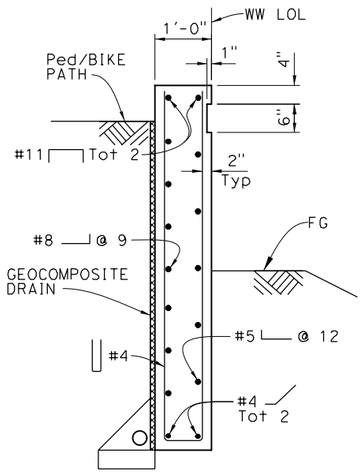

SECTION A-A
3/4"= 1'-0"

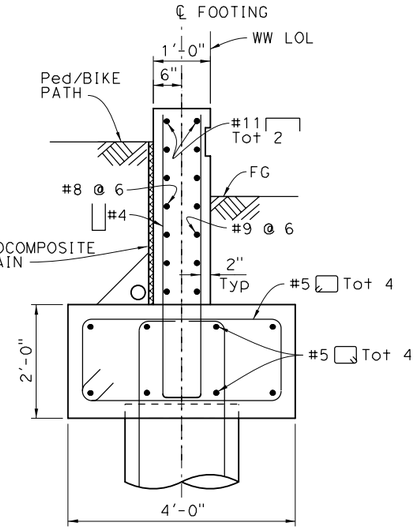

SECTION C-C
3/4"= 1'-0"

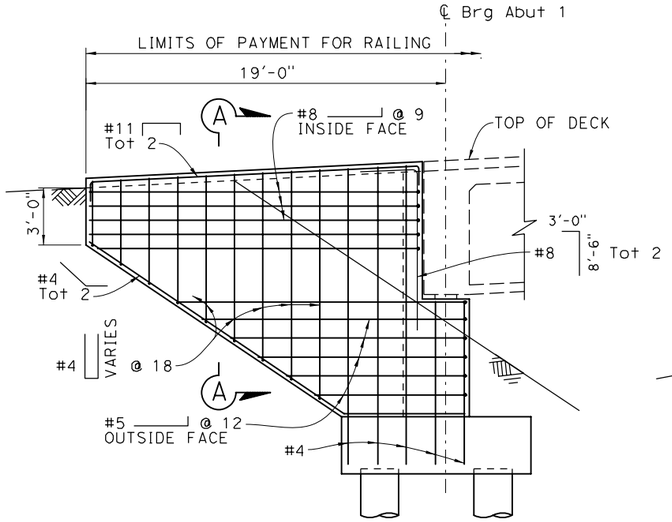

WINGWALL ELEVATION
1/4"= 1'-0"

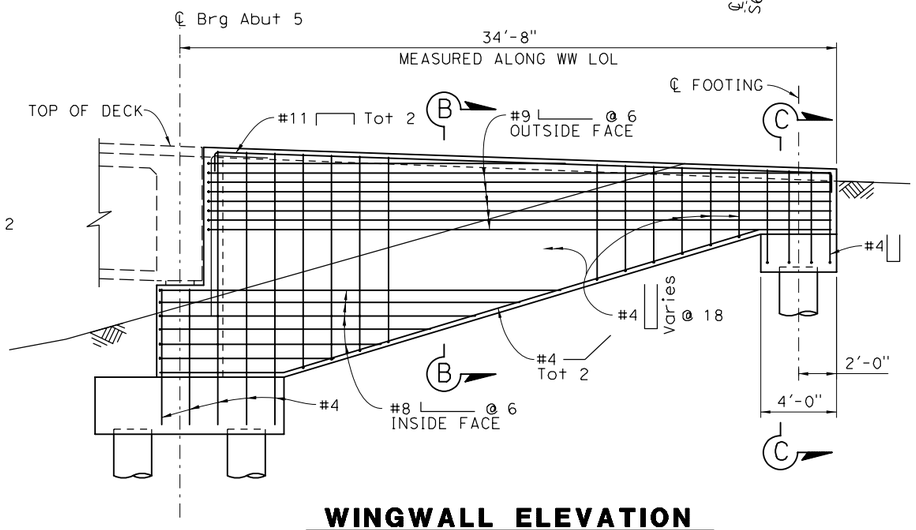

WINGWALL ELEVATION
1/4"= 1'-0"

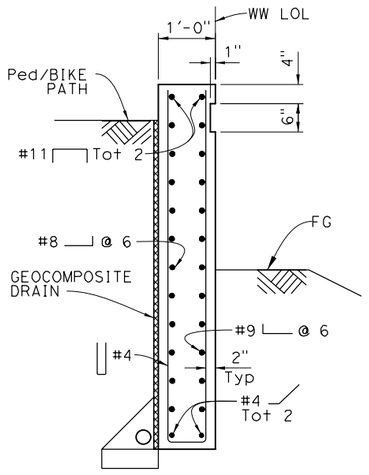

SECTION B-B
3/4"= 1'-0"

NOTES:

1. For Abutment 1 and 5, see "ABUTMENT 1 AND 5 LAYOUT" sheet.
2. For Footing and Pile Data, see "FOUNDATION PLAN" sheet.
3. For Geocomposite drain details, see "ABUTMENT DRAINAGE DETAILS" sheet.

Norbert Gee
DESIGN OVERSIGHT
10/03/2022
SIGN OFF DATE

	BY	CHECKED
DESIGN	J. Hueser	K. Lee
DETAILS	H. Sullivan	K. Lee
QUANTITIES	J. Hueser	S. Kwong

PREPARED FOR THE
STATE OF CALIFORNIA
DEPARTMENT OF TRANSPORTATION

Syed Kazmi
PROJECT ENGINEER

BRIDGE NO. 35-0359
POST MILES 0.9

UNIVERSITY AVENUE POC
ABUTMENT DETAILS No. 2

DESIGN DETAIL SHEET (ENGLISH) (REV. 03/14/12)

ORIGINAL SCALE IN INCHES FOR REDUCED PLANS 0 1 2 3

UNIT: 0743
PROJECT NUMBER & PHASE: 04000007591 CONTRACT No.: 04-272824

DISREGARD PRINTS BEARING EARLIER REVISION DATES →

REVISION DATES				SHEET	OF
08-09-22	~~11-9-20~~	~~10-29-21~~	~~03-08-22~~	7	26

FILE => $REQUEST

USERNAME => $USER DATE PLOTTED => $DATE TIME PLOTTED => $TIME

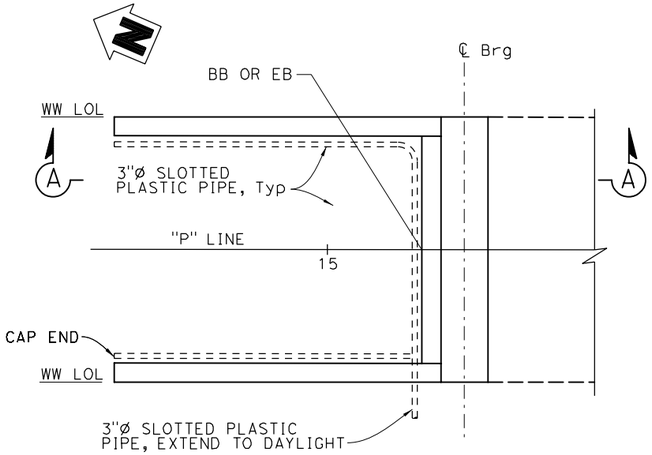

ABUTMENT PLAN

1/4"= 1'-0"
ABUT 1 SHOWN, ABUT 5 SIMILAR

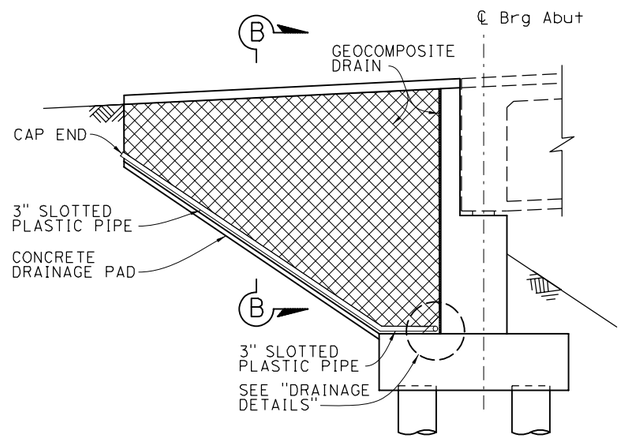

SECTION A-A

1/4"= 1'-0"

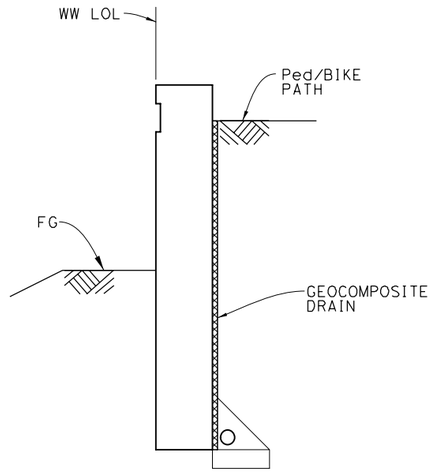

SECTION B-B

3/4"= 1'-0"

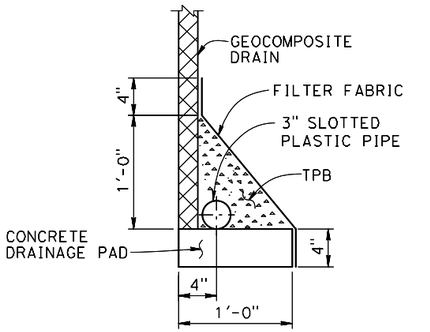

DRAINAGE PAD

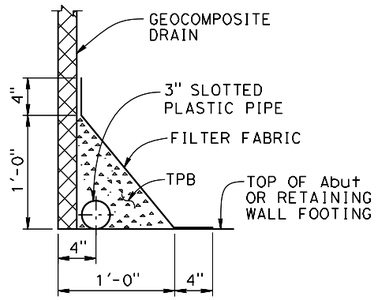

FOOTING

DRAINAGE DETAILS

NOTES:

1. For Abutment 1 and 5 layout, see "ABUTMENT 1 AND 5 LAYOUT" sheet.
2. For Footing and Pile Data, see "FOUNDATION PLAN" sheet.

DIST	COUNTY	ROUTE	POST MILES TOTAL PROJECT	SHEET No	TOTAL SHEETS
04	SM	101	0.8/1.1	118	136

Jan M Hueser — 08-09-22
REGISTERED CIVIL ENGINEER — DATE

9-30-22
PLANS APPROVAL DATE

REGISTERED PROFESSIONAL ENGINEER — Jan Hueser — No. C050215 — Exp. 6-30-23 — CIVIL — STATE OF CALIFORNIA

The State of California or its officers or agents shall not be responsible for the accuracy or completeness of scanned copies of this plan sheet.

CITY OF EAST PALO ALTO
1960 TATE STREET
EAST PALO ALTO, CA 94303

AECOM
2020 L STREET, SUITE 400
SACRAMENTO, CA 95811

Norbert Gee
DESIGN OVERSIGHT
10/03/2022
SIGN OFF DATE

	BY	CHECKED
DESIGN	J. Hueser	K. Lee
DETAILS	H. Sullivan	K. Lee
QUANTITIES	J. Hueser	S. Kwong

PREPARED FOR THE STATE OF CALIFORNIA DEPARTMENT OF TRANSPORTATION

Syed Kazmi
PROJECT ENGINEER

BRIDGE NO.	POST MILES
35-0359	0.9

UNIVERSITY AVENUE POC
ABUTMENT DRAINAGE DETAILS

DESIGN DETAIL SHEET (ENGLISH) (REV. 03/14/12)

ORIGINAL SCALE IN INCHES FOR REDUCED PLANS 0 1 2 3

UNIT: 0743
PROJECT NUMBER & PHASE: 04000007591 CONTRACT No.: 04-272824

DISREGARD PRINTS BEARING EARLIER REVISION DATES →

REVISION DATES				SHEET	OF
08-09-22	11-9-20	10-29-21	03-08-22	8	26

FILE => $REQUEST

USERNAME => $USER DATE PLOTTED => $DATE TIME PLOTTED => $TIME

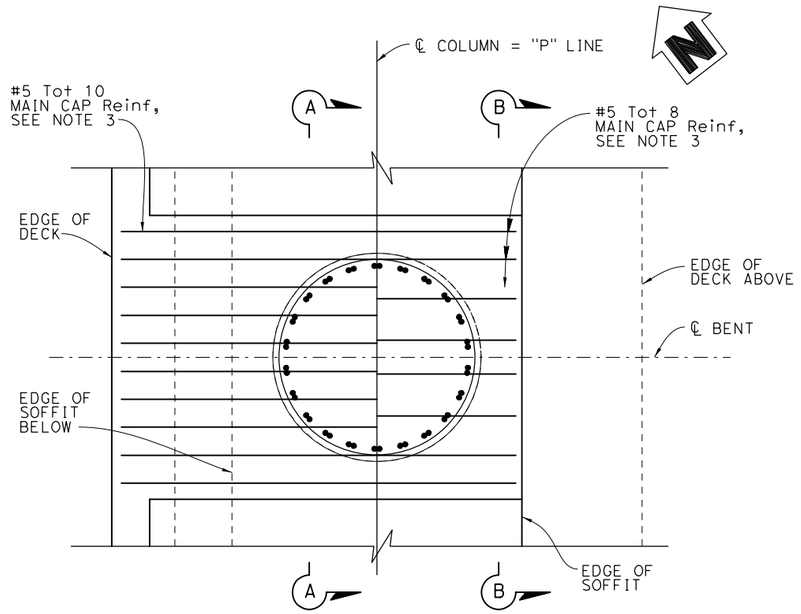

TOP REINFORCEMENT BOTTOM REINFORCEMENT PLAN

1/2"= 1'-0"

(BENT 2 SHOWN, BENT 4 SIMILAR)

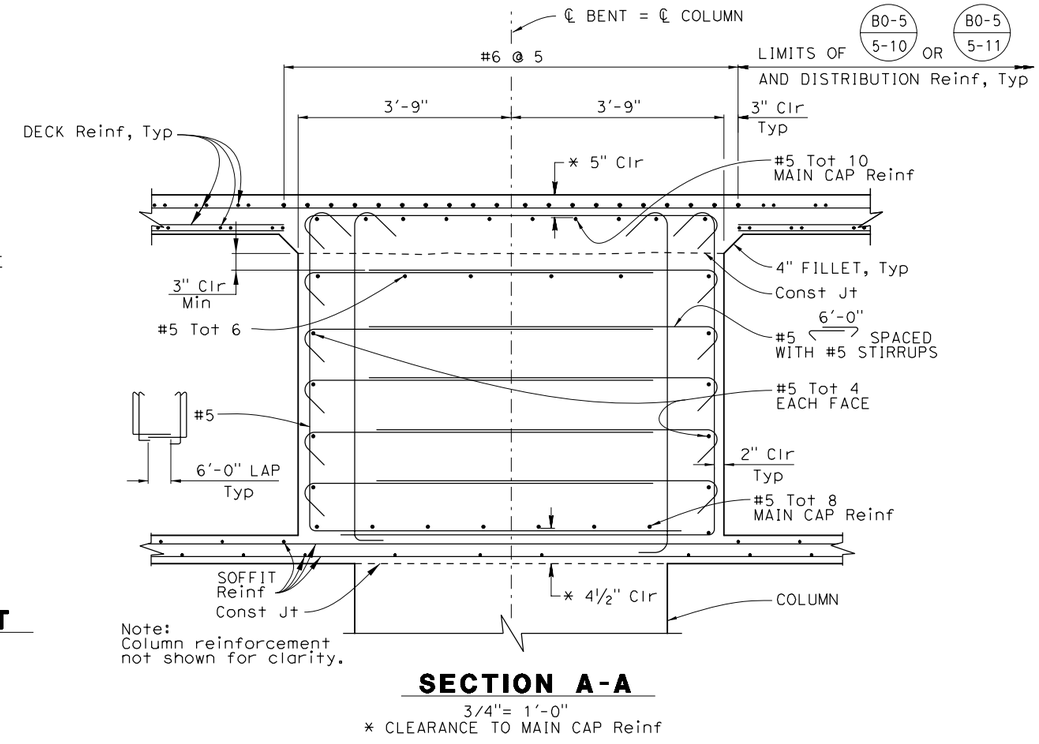

SECTION A-A

3/4"= 1'-0"

* CLEARANCE TO MAIN CAP Reinf

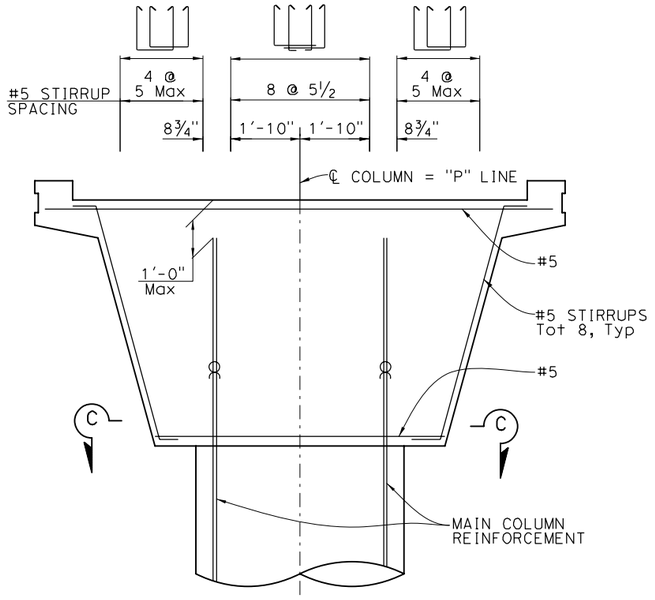

ELEVATION

1/2"= 1'-0"

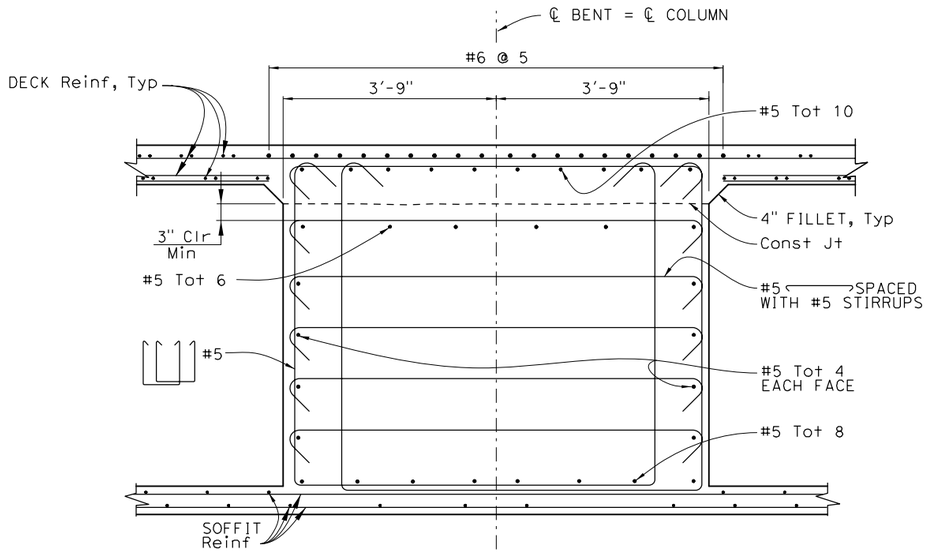

SECTION B-B

3/4"= 1'-0"

For details not shown, see Section A-A.

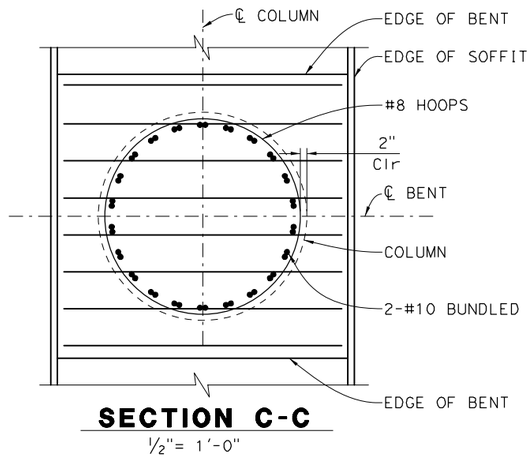

SECTION C-C

1/2"= 1'-0"

DIST	COUNTY	ROUTE	POST MILES TOTAL PROJECT	SHEET No	TOTAL SHEETS
04	SM	101	0.8/1.1	119	136

Jan M Hueser 08-09-22
REGISTERED CIVIL ENGINEER DATE

9-30-22
PLANS APPROVAL DATE

REGISTERED PROFESSIONAL ENGINEER Jan Hueser No. C050215 Exp. 6-30-23 CIVIL STATE OF CALIFORNIA

The State of California or its officers or agents shall not be responsible for the accuracy or completeness of scanned copies of this plan sheet.

CITY OF EAST PALO ALTO
1960 TATE STREET
EAST PALO ALTO, CA 94303

AECOM
2020 L STREET, SUITE 400
SACRAMENTO, CA 95811

NOTES:

1. For Column and CIDH Pile details, see "BENT 2 AND 4 DETAILS" sheet.
2. For Typical Section details, see "TYPICAL SECTION" sheet.
3. No splices allowed in Main cap reinforcement.
4. Adjust reinforcement to clear prestress ducts.

Norbert Gee
DESIGN OVERSIGHT
10/03/2022
SIGN OFF DATE

DESIGN DETAIL SHEET (ENGLISH) (REV. 03/14/12)

	BY	CHECKED
DESIGN	J. Hueser	K. Lee
DETAILS	H. Sullivan	K. Lee
QUANTITIES	J. Hueser	S. Kwong

ORIGINAL SCALE IN INCHES FOR REDUCED PLANS 0 1 2 3

PREPARED FOR THE STATE OF CALIFORNIA DEPARTMENT OF TRANSPORTATION

Syed Kazmi
PROJECT ENGINEER

BRIDGE NO. 35-0359
POST MILES 0.9

UNIT: 0743
PROJECT NUMBER & PHASE: 04000007591 CONTRACT No.: 04-272824

DISREGARD PRINTS BEARING EARLIER REVISION DATES →

FILE => $REQUEST

UNIVERSITY AVENUE POC
BENT 2 AND 4 LAYOUT

REVISION DATES				SHEET	OF
08-09-22	11-9-20	10-25-21	03-08-22	9	26

USERNAME => $USER DATE PLOTTED => $DATE TIME PLOTTED => $TIME

DIST	COUNTY	ROUTE	POST MILES TOTAL PROJECT	SHEET No	TOTAL SHEETS
04	SM	101	0.8/1.1	120	136

Jan M Hueser 08-09-22
REGISTERED CIVIL ENGINEER DATE

9-30-22
PLANS APPROVAL DATE

The State of California or its officers or agents shall not be responsible for the accuracy or completeness of scanned copies of this plan sheet.

REGISTERED PROFESSIONAL ENGINEER — Jan Hueser — No. C050215 — Exp. 6-30-23 — CIVIL — STATE OF CALIFORNIA

CITY OF EAST PALO ALTO
1960 TATE STREET
EAST PALO ALTO, CA 94303

AECOM
2020 L STREET, SUITE 400
SACRAMENTO, CA 95811

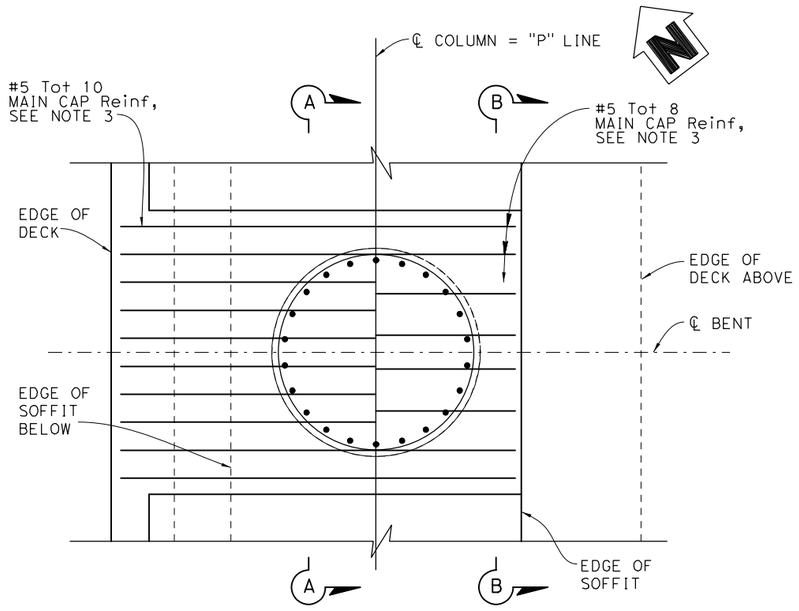

TOP REINFORCEMENT **BOTTOM REINFORCEMENT**

PLAN
½"= 1'-0"

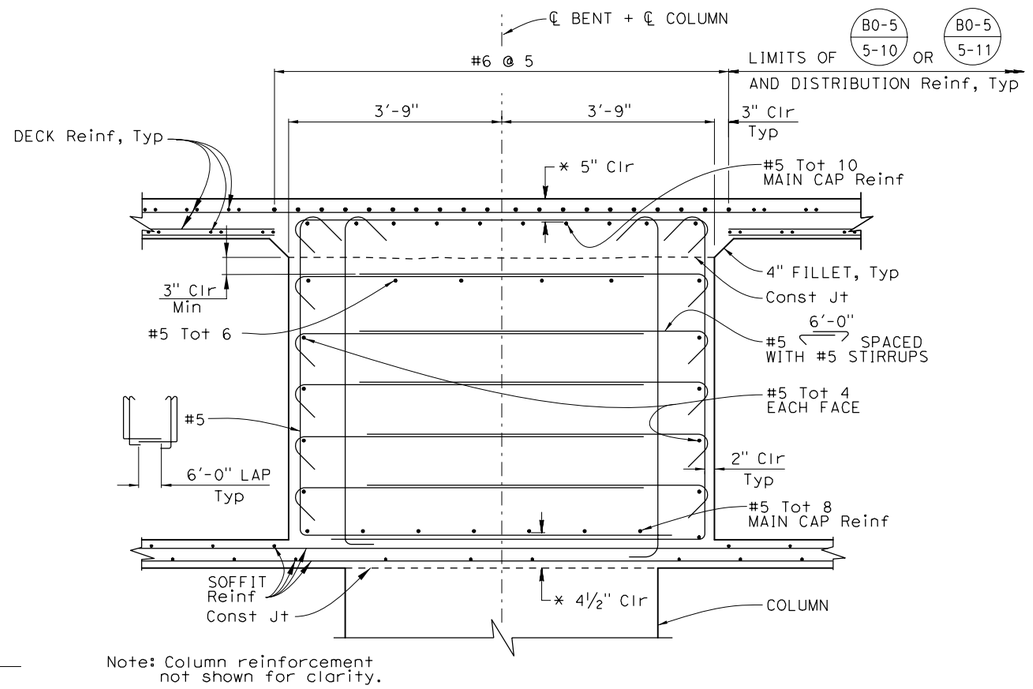

Note: Column reinforcement not shown for clarity.

SECTION A-A
3/4"= 1'-0"

NOTES:

1. For Column and CIDH Pile details, see "BENT 3 DETAILS" sheet.
2. For Typical Section details, see "TYPICAL SECTION" sheet.
3. No splices allowed in Main cap reinforcement.
4. Adjust reinforcement to clear prestress ducts.

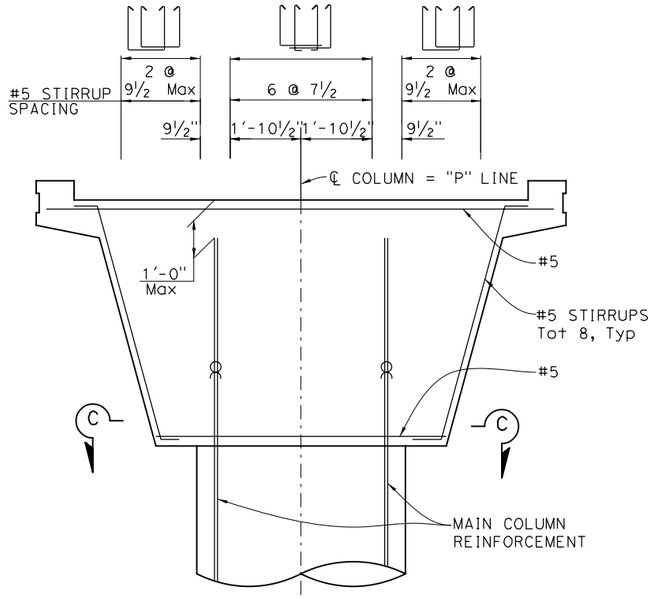

ELEVATION
½"= 1'-0"

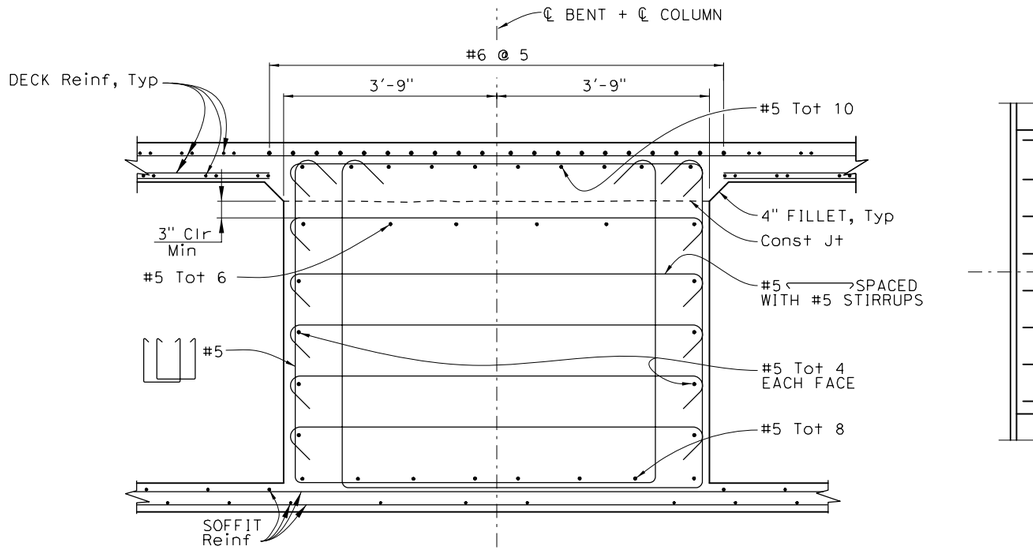

SECTION B-B
3/4"= 1'-0"
For details not shown, see Section A-A.

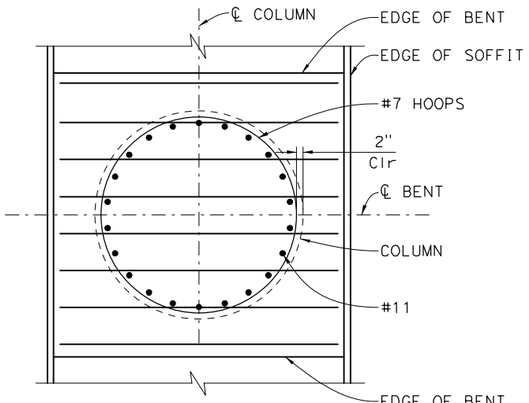

SECTION C-C
½"= 1'-0"

Norbert Gee
DESIGN OVERSIGHT
10/03/2022
SIGN OFF DATE

	BY	CHECKED
DESIGN	J. Hueser	K. Lee
DETAILS	H. Sullivan	K. Lee
QUANTITIES	J. Hueser	S. Kwong

PREPARED FOR THE STATE OF CALIFORNIA DEPARTMENT OF TRANSPORTATION

Syed Kazmi
PROJECT ENGINEER

BRIDGE NO. 35-0359
POST MILES 0.9

UNIVERSITY AVENUE POC
BENT 3 LAYOUT

DESIGN DETAIL SHEET (ENGLISH) (REV. 03/14/12)

ORIGINAL SCALE IN INCHES FOR REDUCED PLANS 0 1 2 3

UNIT: 0743
PROJECT NUMBER & PHASE: 040000007591 CONTRACT No.: 04-272824

DISREGARD PRINTS BEARING EARLIER REVISION DATES →

REVISION DATES				SHEET	OF
08-09-22	11-9-20	10-29-21	03-08-22	10	26

FILE => $REQUEST

USERNAME => $USER DATE PLOTTED => $DATE TIME PLOTTED => $TIME

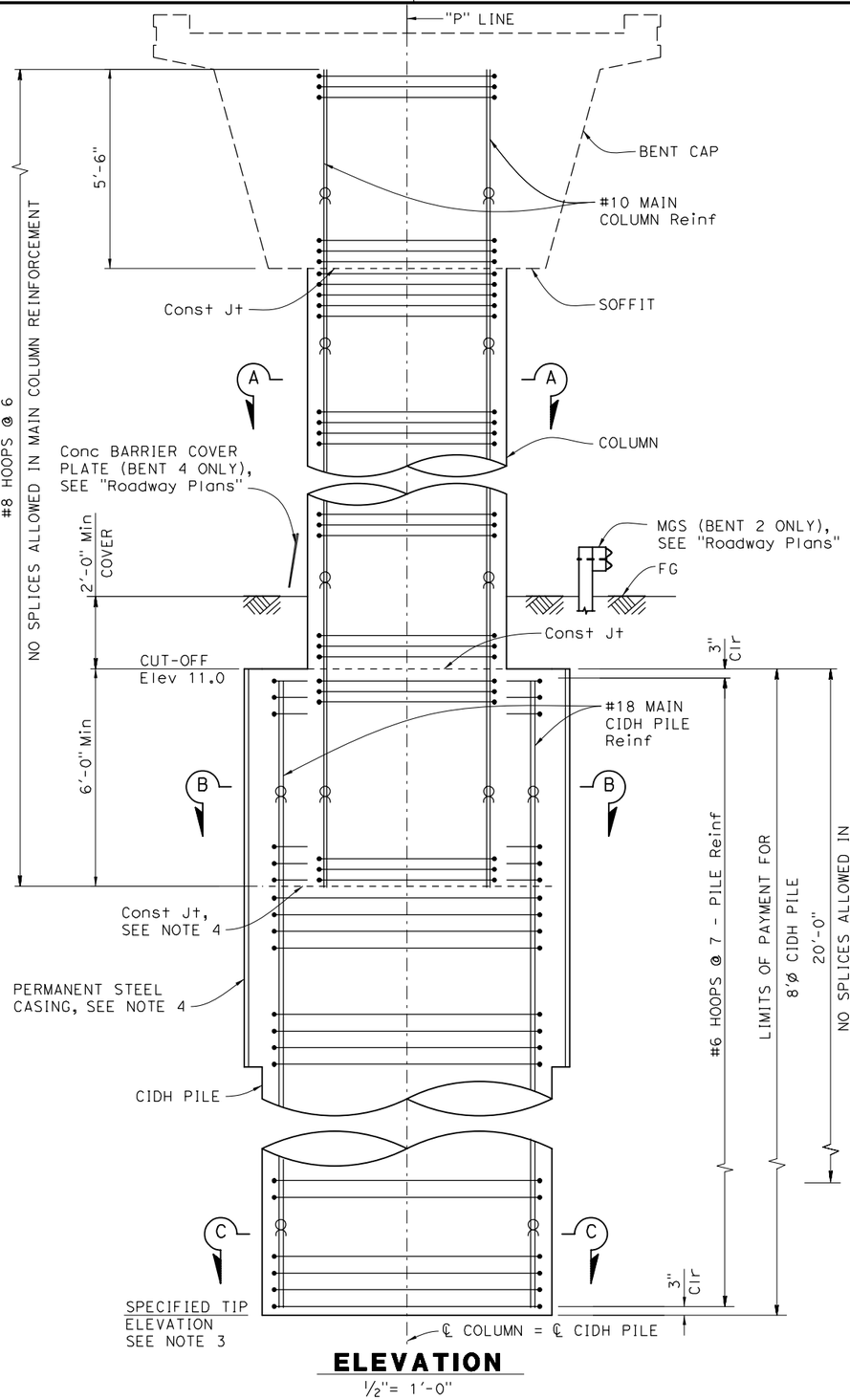

ELEVATION

½"= 1'-0"

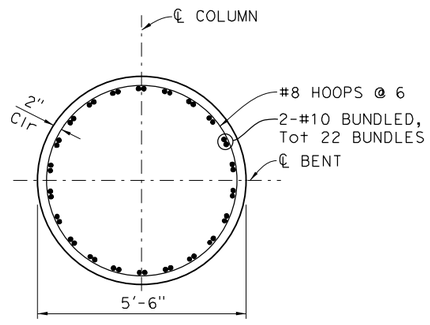

SECTION A-A

½"= 1'-0"

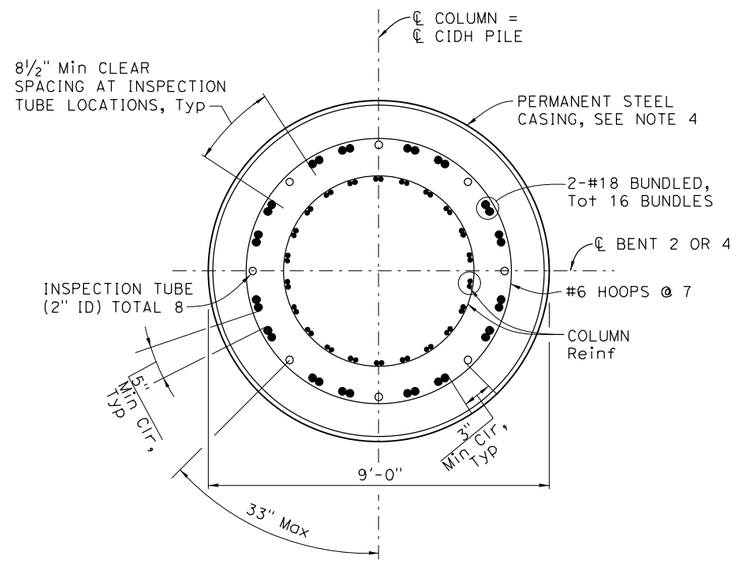

SECTION B-B

½"= 1'-0"

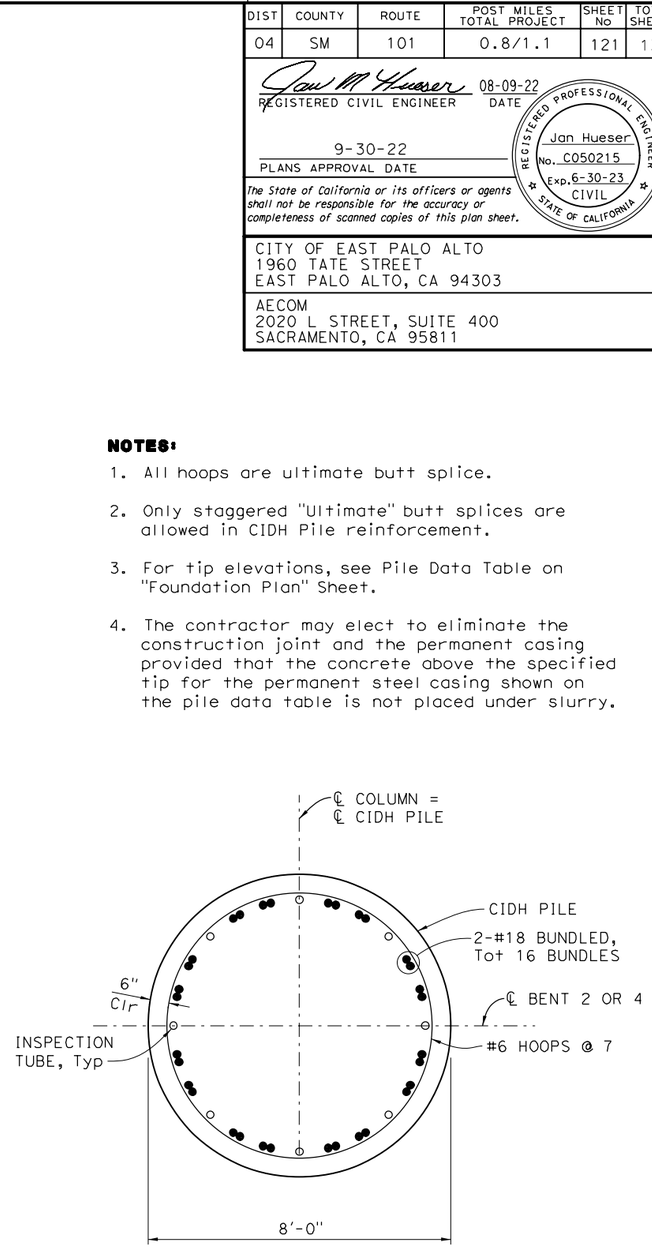

SECTION C-C

½"= 1'-0"

NOTES:

1. All hoops are ultimate butt splice.
2. Only staggered "Ultimate" butt splices are allowed in CIDH Pile reinforcement.
3. For tip elevations, see Pile Data Table on "Foundation Plan" Sheet.
4. The contractor may elect to eliminate the construction joint and the permanent casing provided that the concrete above the specified tip for the permanent steel casing shown on the pile data table is not placed under slurry.

DIST	COUNTY	ROUTE	POST MILES TOTAL PROJECT	SHEET No	TOTAL SHEETS
04	SM	101	0.8/1.1	121	136

Jan M Hueser 08-09-22
REGISTERED CIVIL ENGINEER DATE

9-30-22
PLANS APPROVAL DATE

REGISTERED PROFESSIONAL ENGINEER — Jan Hueser — No. C050215 — Exp. 6-30-23 — CIVIL — STATE OF CALIFORNIA

The State of California or its officers or agents shall not be responsible for the accuracy or completeness of scanned copies of this plan sheet.

CITY OF EAST PALO ALTO
1960 TATE STREET
EAST PALO ALTO, CA 94303

AECOM
2020 L STREET, SUITE 400
SACRAMENTO, CA 95811

Norbert Gee
DESIGN OVERSIGHT
10/03/2022
SIGN OFF DATE

	BY	CHECKED
DESIGN	J. Hueser	K. Lee
DETAILS	H. Sullivan	K. Lee
QUANTITIES	J. Hueser	S. Kwong

PREPARED FOR THE STATE OF CALIFORNIA DEPARTMENT OF TRANSPORTATION

Syed Kazmi
PROJECT ENGINEER

BRIDGE NO. 35-0359
POST MILES 0.9

UNIVERSITY AVENUE POC
BENT 2 AND 4 DETAILS

DESIGN DETAIL SHEET (ENGLISH) (REV. 03/14/12)

ORIGINAL SCALE IN INCHES FOR REDUCED PLANS 0 1 2 3

UNIT: 0743
PROJECT NUMBER & PHASE: 04000007591
CONTRACT No.: 04-272824

DISREGARD PRINTS BEARING EARLIER REVISION DATES

REVISION DATES				SHEET	OF
08-09-22	11-9-20	10-29-21	03-08-22	11	26

FILE => $REQUEST

USERNAME => $USER DATE PLOTTED => $DATE TIME PLOTTED => $TIME

DIST	COUNTY	ROUTE	POST MILES TOTAL PROJECT	SHEET No	TOTAL SHEETS
04	SM	101	0.8/1.1	122	136

Jan M Hueser 08-09-22
REGISTERED CIVIL ENGINEER DATE

9-30-22
PLANS APPROVAL DATE

REGISTERED PROFESSIONAL ENGINEER — Jan Hueser — No. C050215 — Exp. 6-30-23 — CIVIL — STATE OF CALIFORNIA

The State of California or its officers or agents shall not be responsible for the accuracy or completeness of scanned copies of this plan sheet.

CITY OF EAST PALO ALTO
1960 TATE STREET
EAST PALO ALTO, CA 94303

AECOM
2020 L STREET, SUITE 400
SACRAMENTO, CA 95811

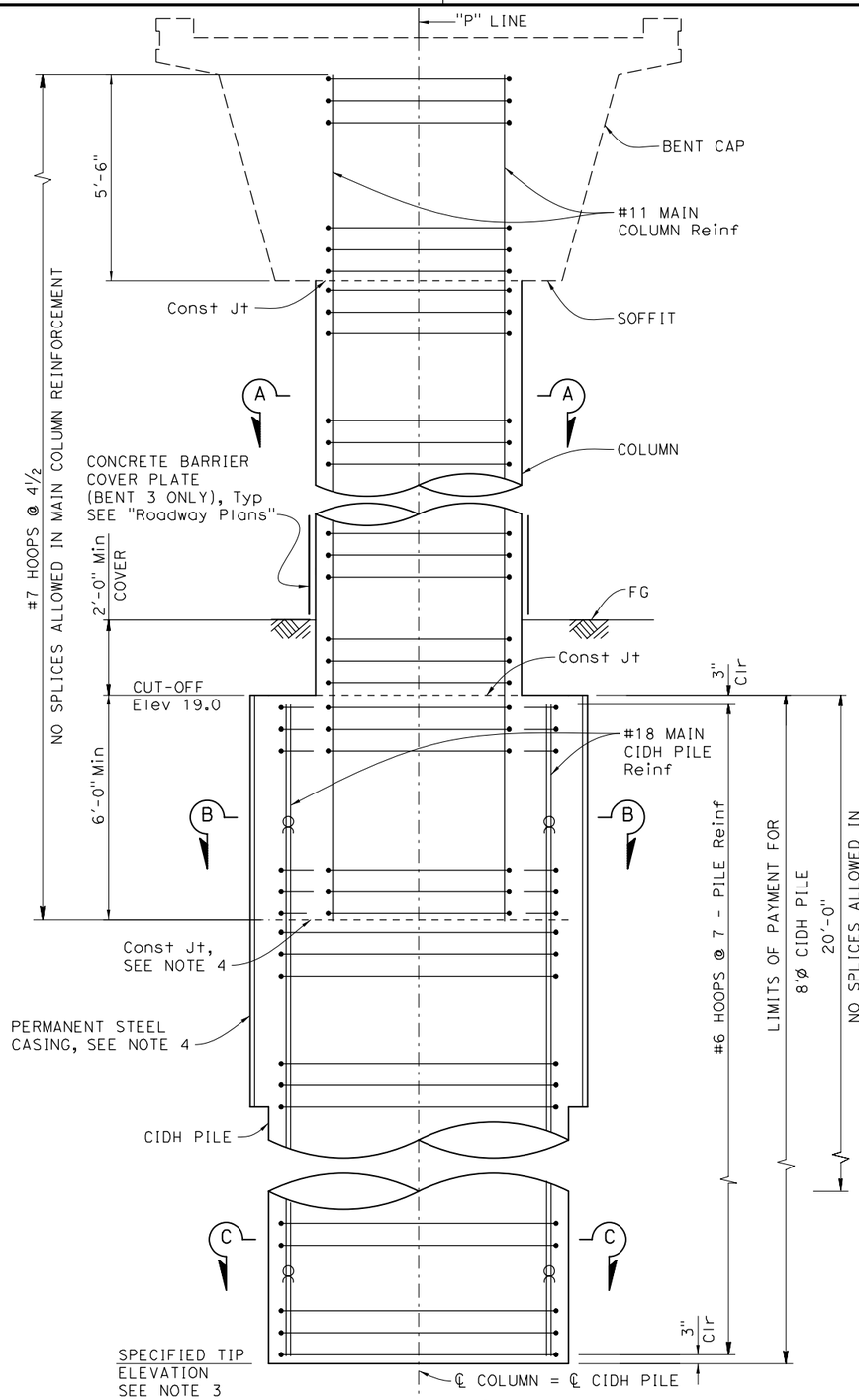

ELEVATION
½"= 1'-0"

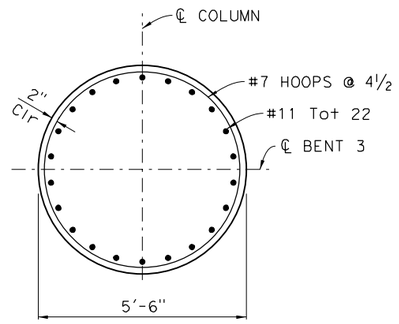

SECTION A-A
½"= 1'-0"

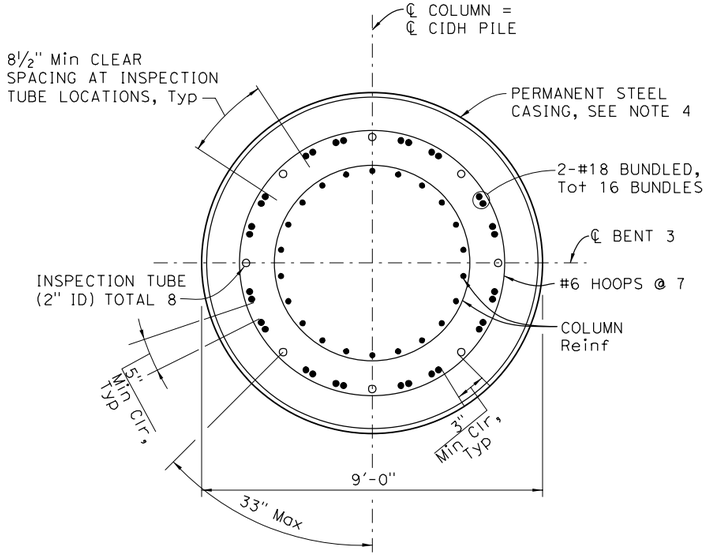

SECTION B-B
½"= 1'-0"

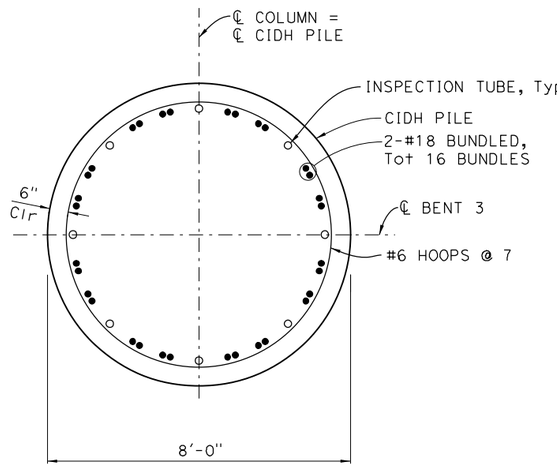

SECTION C-C
½"= 1'-0"

NOTES:

1. All hoops are ultimate butt splice.
2. Only staggered "Ultimate" butt splices are allowed in CIDH Pile reinforcement.
3. For tip elevations, see Pile Data Table on "Foundation Plan" Sheet.
4. The contractor may elect to eliminate the construction joint and the permanent casing provided that the concrete above the specified tip for the permanent steel casing shown on the pile data table is not placed under slurry.

Norbert Gee
DESIGN OVERSIGHT
10/03/2022
SIGN OFF DATE

	BY	CHECKED
DESIGN	J. Hueser	K. Lee
DETAILS	H. Sullivan	K. Lee
QUANTITIES	J. Hueser	S. Kwong

PREPARED FOR THE STATE OF CALIFORNIA DEPARTMENT OF TRANSPORTATION

Syed Kazmi
PROJECT ENGINEER

BRIDGE NO. 35-0359
POST MILES 0.9

UNIVERSITY AVENUE POC
BENT 3 DETAILS

DESIGN DETAIL SHEET (ENGLISH) (REV. 03/14/12)

ORIGINAL SCALE IN INCHES FOR REDUCED PLANS 0 1 2 3

UNIT: 0743
PROJECT NUMBER & PHASE: 04000007591 CONTRACT No.: 04-272824

DISREGARD PRINTS BEARING EARLIER REVISION DATES →

REVISION DATES				SHEET	OF
08-09-22	11-9-20	10-29-21	03-08-22	12	26

FILE => $REQUEST

USERNAME => $USER DATE PLOTTED => $DATE TIME PLOTTED => $TIME

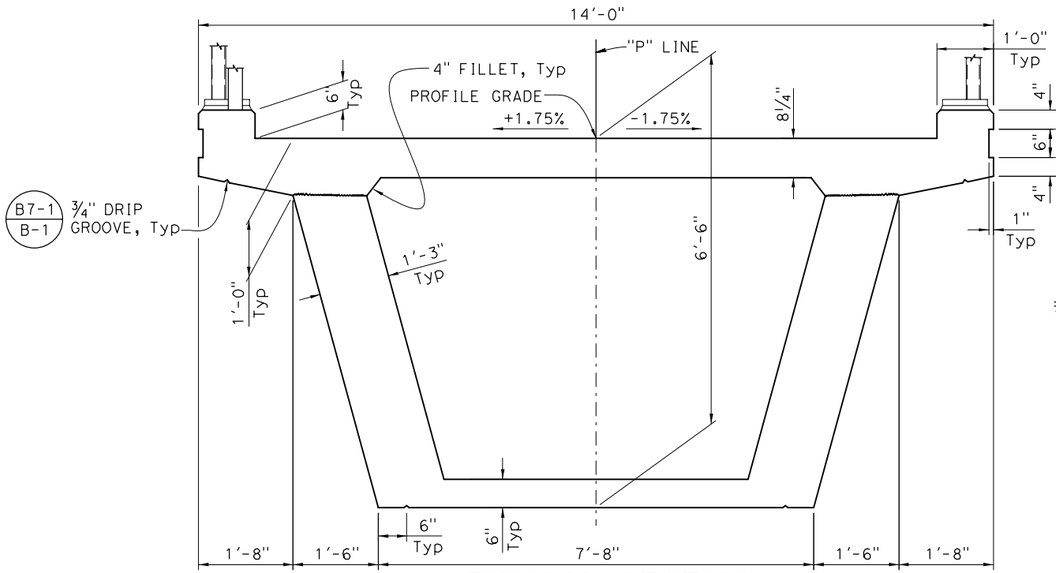

TYPICAL SECTION

3/4"= 1'-0"

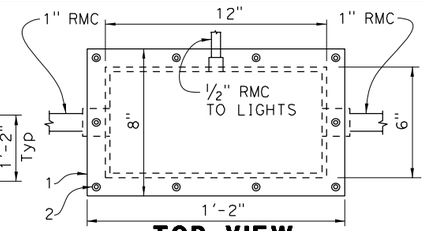

TOP VIEW

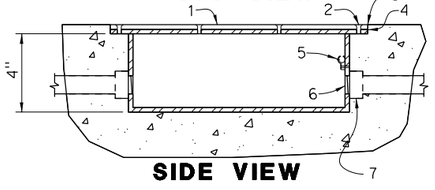

SIDE VIEW

JUNCTION BOX DETAIL

N.T.S

JUNCTION BOX NOTES:

Cast Iron, Flat Flanged Junction Box, Nema 4, UL Listed, w/ Mounting Lugs. ¼" Wall thickness, Hot-Dip Galvanized Finish - Cast Iron.

1. Slip-Resistant cover finish.
2. Flush, SS cover screws.
3. Cover set perfectly flush with concrete deck.
4. Neoprene Gasket
5. Ground Lug, Drill and Tap Box for attachment screw.
6. Drill and tap conduit connections. Connections shall be made w/ Pipe Thread sealing compound that will not interrupt grounding continuity.
7. Concrete-Tight Conduit Connector.

DIST	COUNTY	ROUTE	POST MILES TOTAL PROJECT	SHEET No	TOTAL SHEETS
04	SM	101	0.8/1.1	123	136

Jan M Hueser 08-09-22
REGISTERED CIVIL ENGINEER DATE

9-30-22
PLANS APPROVAL DATE

REGISTERED PROFESSIONAL ENGINEER — Jan Hueser — No. C050215 — Exp. 6-30-23 — CIVIL — STATE OF CALIFORNIA

The State of California or its officers or agents shall not be responsible for the accuracy or completeness of scanned copies of this plan sheet.

CITY OF EAST PALO ALTO
1960 TATE STREET
EAST PALO ALTO, CA 94303

AECOM
2020 L STREET, SUITE 400
SACRAMENTO, CA 95811

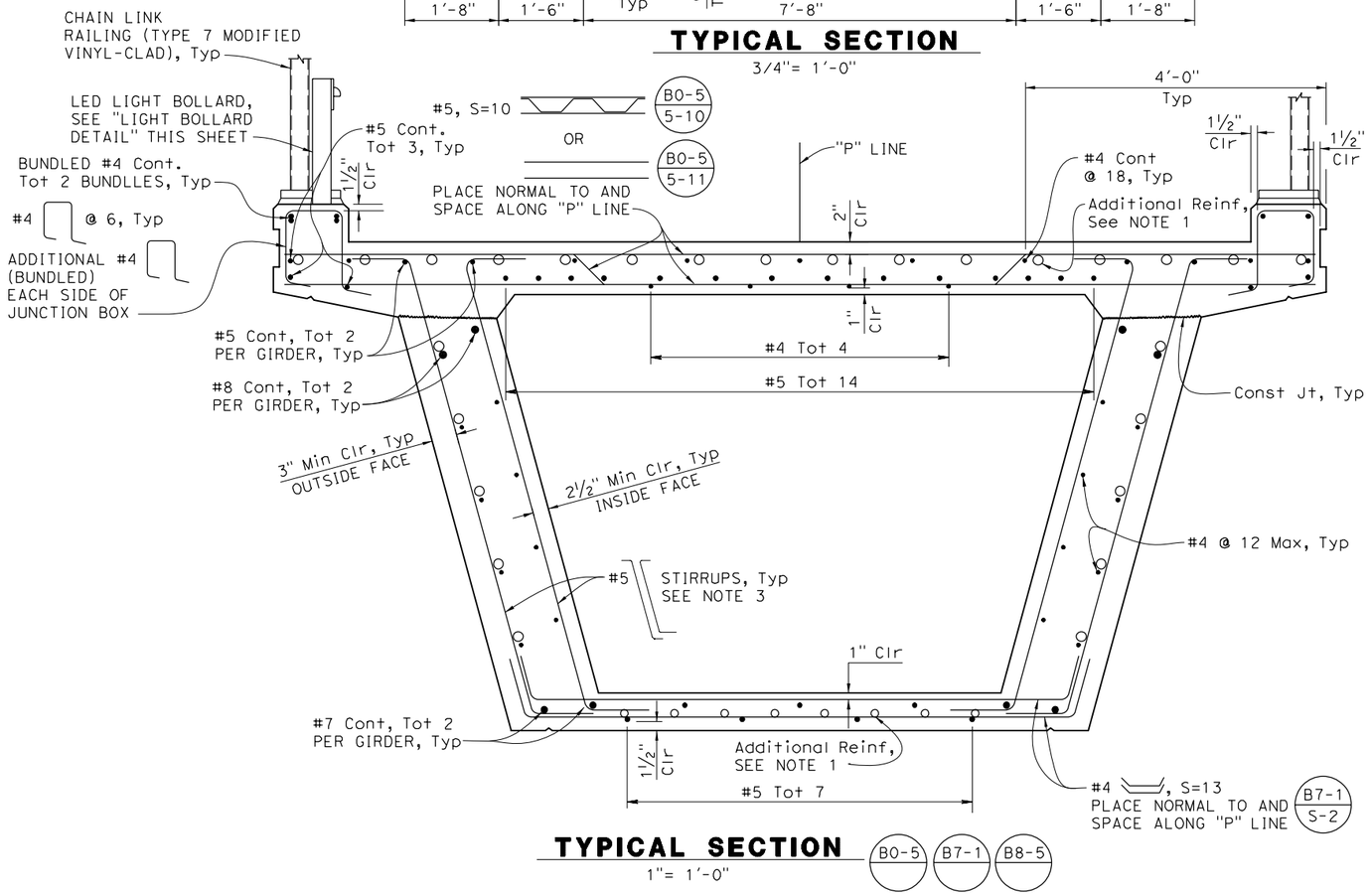

TYPICAL SECTION

1"= 1'-0"

B0-5 B7-1 B8-5

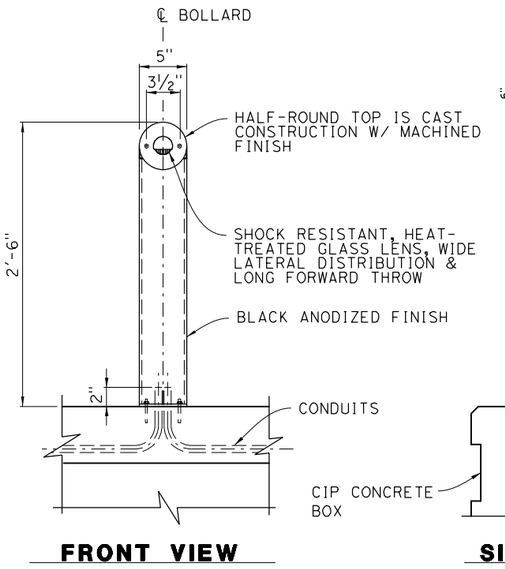

FRONT VIEW

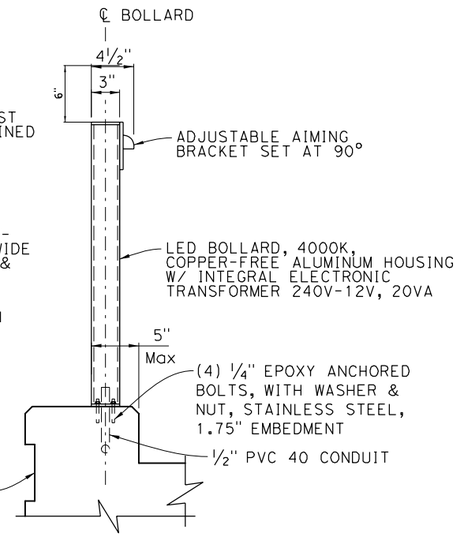

SIDE VIEW

LIGHT BOLLARD DETAIL

1½"= 1'-0"

LEGEND:

O Indicates additional reinforcement see, "GIRDER REINFORCEMENT" sheet.

NOTES:

1. For additional longitudinal reinforcement, see "GIRDER REINFORCEMENT" sheet.
2. For stirrup spacing, see "GIRDER LAYOUT 1 OF 2" AND "GIRDER LAYOUT 2 OF 2" sheets.
3. Continuous longitudinal reinforcement may be lap spliced.
4. For location of Light Bollard and Junction Box, see "Lighting Plans".

Norbert Gee
DESIGN OVERSIGHT
10/03/2022
SIGN OFF DATE

DESIGN DETAIL SHEET (ENGLISH) (REV. 03/14/12)

	BY	CHECKED
DESIGN	J. Hueser	K. Lee
DETAILS	H. Sullivan	K. Lee
QUANTITIES	J. Hueser	S. Kwong

PREPARED FOR THE STATE OF CALIFORNIA DEPARTMENT OF TRANSPORTATION

ORIGINAL SCALE IN INCHES FOR REDUCED PLANS 0 1 2 3

Syed Kazmi
PROJECT ENGINEER

BRIDGE NO.	POST MILES
35-0359	0.9

UNIT: 0743
PROJECT NUMBER & PHASE: 04000007591 CONTRACT No.: 04-272824

UNIVERSITY AVENUE POC
TYPICAL SECTION

DISREGARD PRINTS BEARING EARLIER REVISION DATES →

REVISION DATES				SHEET	OF
08-09-22	11-9-20	10-29-21	03-04-22	13	26

FILE => $REQUEST

USERNAME => $USER DATE PLOTTED => $DATE TIME PLOTTED => $TIME

DIST	COUNTY	ROUTE	POST MILES TOTAL PROJECT	SHEET No	TOTAL SHEETS
04	SM	101	0.8/1.1	124	136

Jan M Hueser 08-09-22
REGISTERED CIVIL ENGINEER DATE

9-30-22
PLANS APPROVAL DATE

REGISTERED PROFESSIONAL ENGINEER — Jan Hueser — No. C050215 — Exp. 6-30-23 — CIVIL — STATE OF CALIFORNIA

The State of California or its officers or agents shall not be responsible for the accuracy or completeness of scanned copies of this plan sheet.

CITY OF EAST PALO ALTO
1960 TATE STREET
EAST PALO ALTO, CA 94303

AECOM
2020 L STREET, SUITE 400
SACRAMENTO, CA 95811

PRESTRESSING NOTES:

270 ksi Low Relaxation Strands:

Pjack (Total) = 3960 kip

Anchor Set = 3/8"

Total Number of Girders = 2

Friction curvature coefficient, μ = 0.15

Friction wobble coefficient, k = 0.0002/ft

Distribution of prestress force (Pjack) between girders shall not exceed the ratio of 10 to 9.

Maximum final force variation between girders shall not exceed 725 kip. Tendons shall be arranged symmetrically in the structure.

Concrete: f'c = 5.0 ksi @ 28 days

f'ci = 3.5 ksi @ time of stressing

Contractor shall submit elongation calculations

based on initial stress at = 0.857 times jacking stress

Two end stressing shall be used

LEGEND:

⊠ Indicates theoretical point of no movement

Indicates girder stem thickness in inches see B7-1 / S-3

NOTE:

1. For "SECTION A-A", "SECTION B-B", "SECTION C-C" and "CAMBER DIAGRAM", see "GIRDER DETAILS No. 1" sheet.

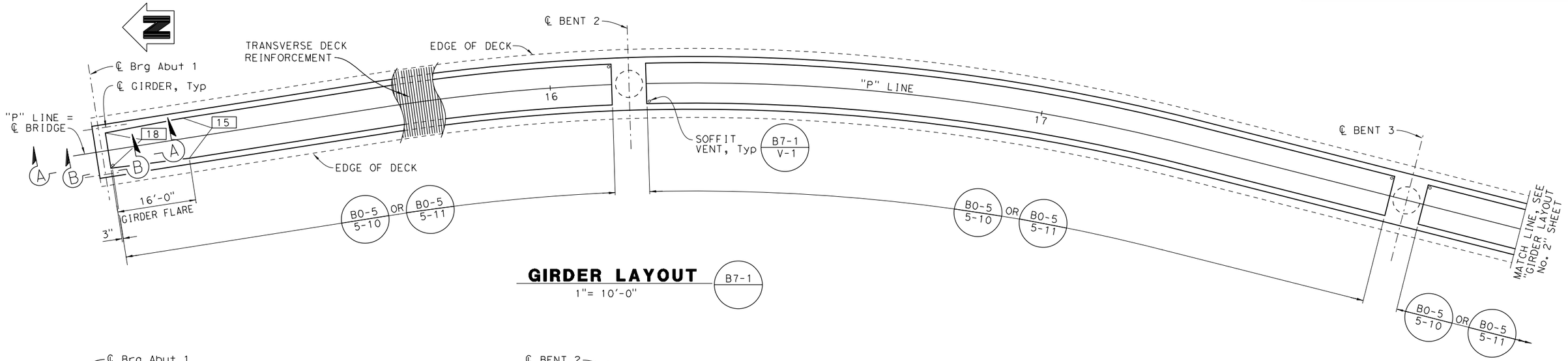

GIRDER LAYOUT B7-1

1"= 10'-0"

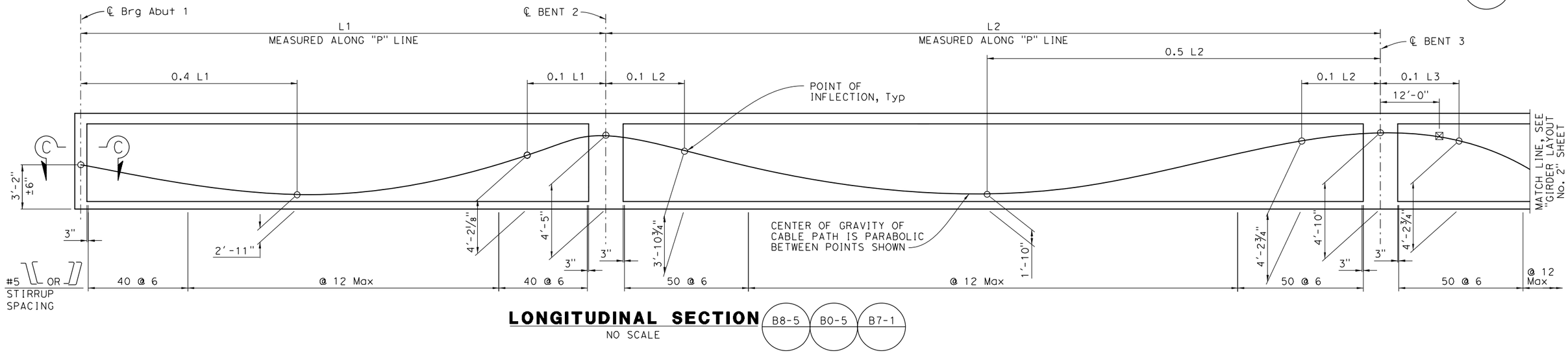

LONGITUDINAL SECTION B8-5 / B0-5 / B7-1

NO SCALE

Norbert Gee
DESIGN OVERSIGHT
10/03/2022
SIGN OFF DATE

DESIGN DETAIL SHEET (ENGLISH) (REV. 03/14/12)

	BY	CHECKED
DESIGN	J. Hueser	K. Lee
DETAILS	H. Sullivan	K. Lee
QUANTITIES	J. Hueser	S. Kwong

ORIGINAL SCALE IN INCHES FOR REDUCED PLANS 0 1 2 3

PREPARED FOR THE STATE OF CALIFORNIA DEPARTMENT OF TRANSPORTATION

Syed Kazmi
PROJECT ENGINEER

BRIDGE NO. 35-0359
POST MILES 0.9

UNIVERSITY AVENUE POC
GIRDER LAYOUT No. 1

UNIT: 0743
PROJECT NUMBER & PHASE: 04000007591 CONTRACT No.: 04-272824

DISREGARD PRINTS BEARING EARLIER REVISION DATES →

REVISION DATES				SHEET	OF
08-09-22	11-9-20	10-29-21	03-04-22	14	26

FILE => $REQUEST

USERNAME => $USER DATE PLOTTED => $DATE TIME PLOTTED => $TIME

DIST	COUNTY	ROUTE	POST MILES TOTAL PROJECT	SHEET No	TOTAL SHEETS
04	SM	101	0.8/1.1	125	136

REGISTERED CIVIL ENGINEER — 08-09-22 DATE

9-30-22
PLANS APPROVAL DATE

REGISTERED PROFESSIONAL ENGINEER — Jan Hueser — No. C050215 — Exp. 6-30-23 — CIVIL — STATE OF CALIFORNIA

The State of California or its officers or agents shall not be responsible for the accuracy or completeness of scanned copies of this plan sheet.

CITY OF EAST PALO ALTO
1960 TATE STREET
EAST PALO ALTO, CA 94303

AECOM
2020 L STREET, SUITE 400
SACRAMENTO, CA 95811

NOTES:

1. For "SECTION A-A", "SECTION B-B", "SECTION C-C", and "CAMBER DIAGRAM", see "GIRDER DETAILS No. 1" sheet.
2. For "PRESTRESSING NOTES", see "GIRDER LAYOUT No. 1" sheet.

LEGEND:

⊠ Indicates theoretical point of no movement

Indicates girder stem thickness in inches see B7-1 / S-3

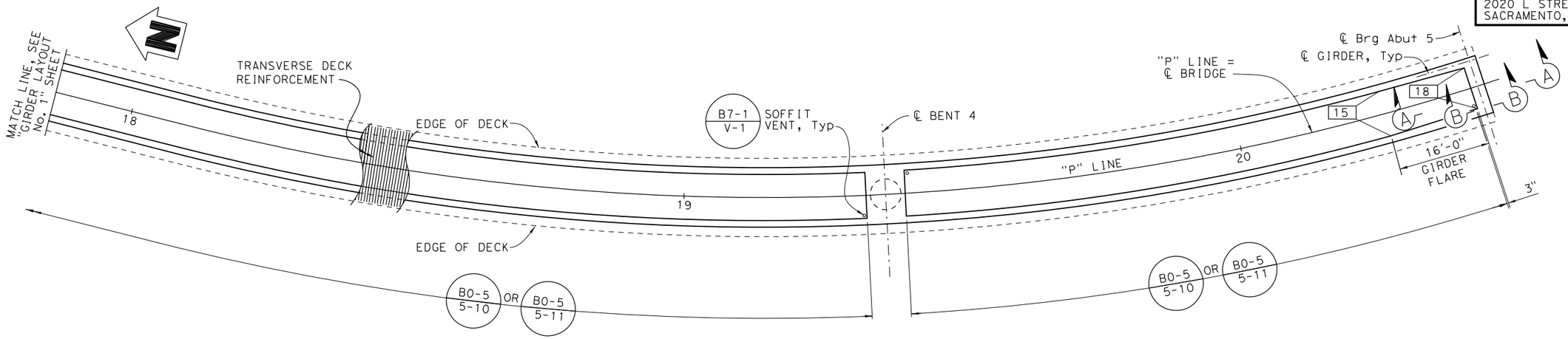

GIRDER LAYOUT

1"= 10'-0"

B7-1

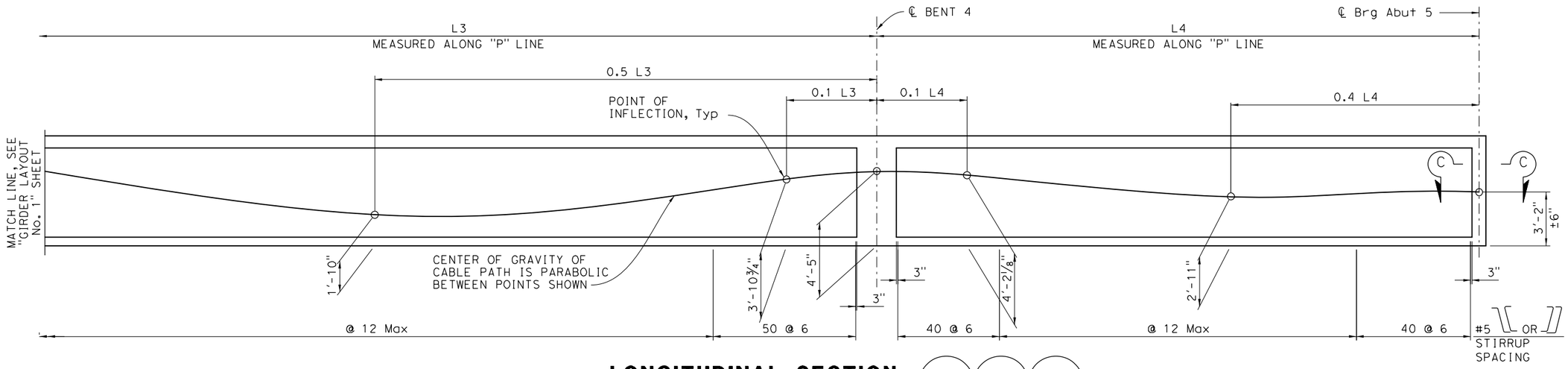

LONGITUDINAL SECTION

NO SCALE

B8-5 B0-5 B7-1

Norbert Gee
DESIGN OVERSIGHT
10/03/2022
SIGN OFF DATE

DESIGN DETAIL SHEET (ENGLISH) (REV. 03/14/12)

	BY	CHECKED
DESIGN	J. Hueser	K. Lee
DETAILS	H. Sullivan	K. Lee
QUANTITIES	J. Hueser	S. Kwong

ORIGINAL SCALE IN INCHES FOR REDUCED PLANS 0 1 2 3

PREPARED FOR THE STATE OF CALIFORNIA DEPARTMENT OF TRANSPORTATION

Syed Kazmi
PROJECT ENGINEER

BRIDGE NO. 35-0359
POST MILES 0.9

UNIT: 0743
PROJECT NUMBER & PHASE: 04000007591 CONTRACT No.: 04-272824

DISREGARD PRINTS BEARING EARLIER REVISION DATES →

REVISION DATES: 08-09-22 | 11-9-20 | 10-29-21 | 03-04-22

SHEET 15 OF 26

UNIVERSITY AVENUE POC
GIRDER LAYOUT No. 2

FILE => $REQUEST

USERNAME => $USER DATE PLOTTED => $DATE TIME PLOTTED => $TIME

DIST	COUNTY	ROUTE	POST MILES TOTAL PROJECT	SHEET No	TOTAL SHEETS
04	SM	101	0.8/1.1	126	136

REGISTERED CIVIL ENGINEER — 08-09-22 DATE

9-30-22
PLANS APPROVAL DATE

The State of California or its officers or agents shall not be responsible for the accuracy or completeness of scanned copies of this plan sheet.

REGISTERED PROFESSIONAL ENGINEER — Jan Hueser — No. C050215 — Exp. 6-30-23 — CIVIL — STATE OF CALIFORNIA

CITY OF EAST PALO ALTO
1960 TATE STREET
EAST PALO ALTO, CA 94303

AECOM
2020 L STREET, SUITE 400
SACRAMENTO, CA 95811

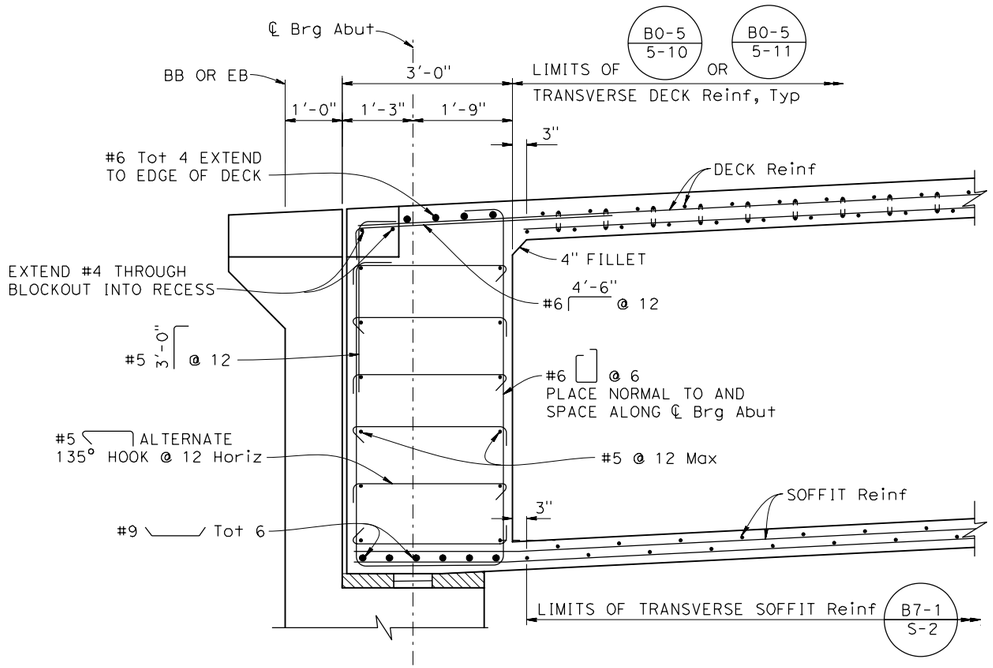

SECTION A-A

¾" = 1'-0"

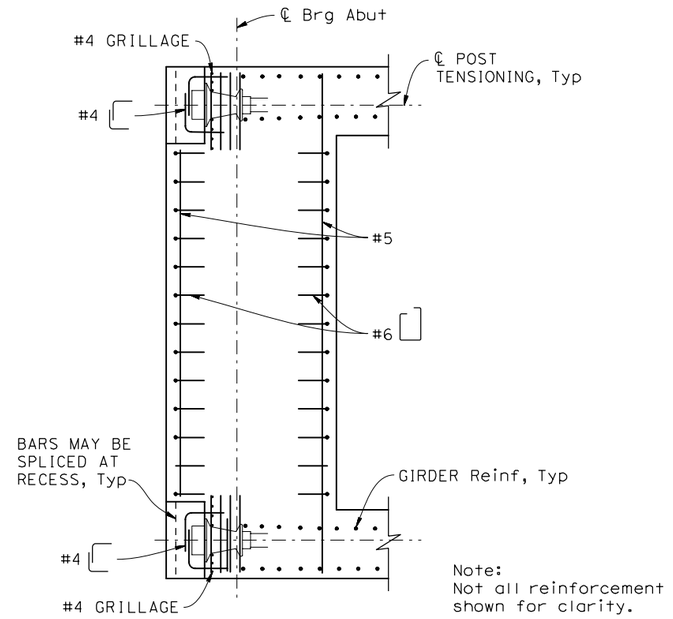

SECTION C-C

B8-5

¾" = 1'-0"

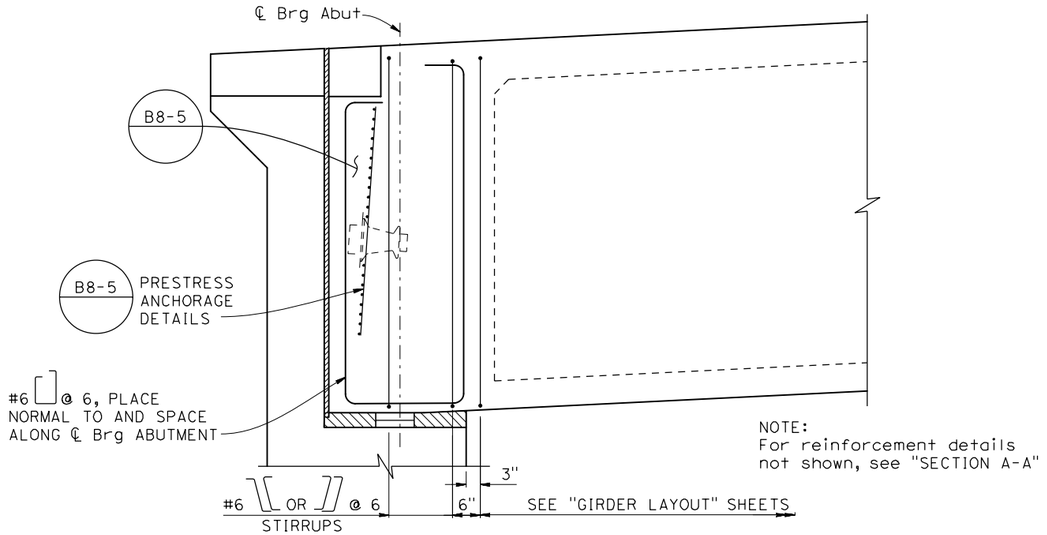

GIRDER STIRRUPS LAYOUT - SECTION B-B

¾" = 1'-0"

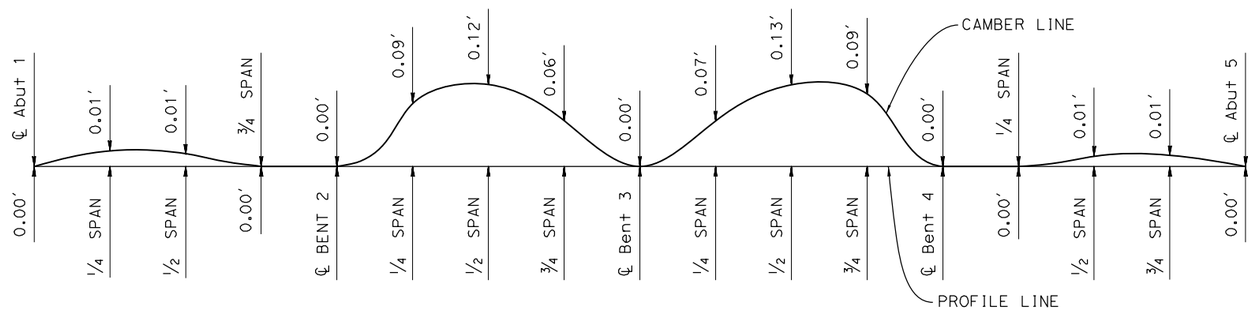

CAMBER DIAGRAM

No Scale
(Does not include allowance for falsework settlement)

NOTE:

1. For locations of sections A-A, B-B, and C-C, see "GIRDER LAYOUT No. 1" AND "GIRDER LAYOUT No. 2" sheets.

Norbert Gee
DESIGN OVERSIGHT
10/03/2022
SIGN OFF DATE

DESIGN DETAIL SHEET (ENGLISH) (REV. 03/14/12)

	BY	CHECKED
DESIGN	J. Hueser	K. Lee
DETAILS	H. Sullivan	K. Lee
QUANTITIES	J. Hueser	S. Kwong

ORIGINAL SCALE IN INCHES FOR REDUCED PLANS 0 1 2 3

PREPARED FOR THE STATE OF CALIFORNIA DEPARTMENT OF TRANSPORTATION

Syed Kazmi
PROJECT ENGINEER

BRIDGE NO.	35-0359
POST MILES	0.9

UNIT: 0743
PROJECT NUMBER & PHASE: 040000007591 CONTRACT No.: 04-272824

FILE => $REQUEST

UNIVERSITY AVENUE POC
GIRDER DETAILS No. 1

DISREGARD PRINTS BEARING EARLIER REVISION DATES →

REVISION DATES				SHEET	OF
08-09-22	11-9-20	10-29-21	03-08-22	16	26

USERNAME => $USER DATE PLOTTED => $DATE TIME PLOTTED => $TIME

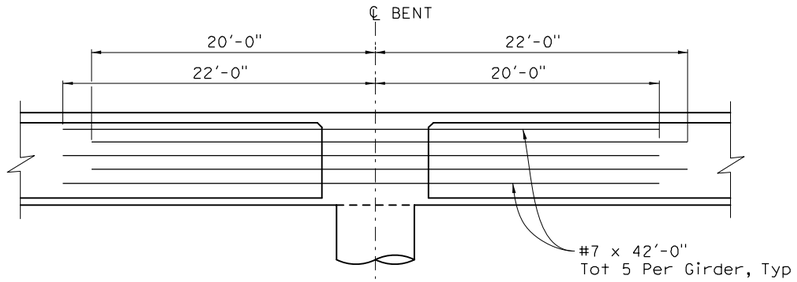

ADDITIONAL GIRDER REINFORCEMENT (EXTERIOR FACE)

NO SCALE

NOTES:

1. Place all reinforcement parallel to ℄ Girder.
2. Not all reinforcement shown, see "TYPICAL SECTION" sheet.
3. No splices allowed in Additional Girder Reinforcement.

DIST	COUNTY	ROUTE	POST MILES TOTAL PROJECT	SHEET No	TOTAL SHEETS
04	SM	101	0.8/1.1	127	136

Jan M Hueser — REGISTERED CIVIL ENGINEER — 08-09-22 DATE

9-30-22
PLANS APPROVAL DATE

REGISTERED PROFESSIONAL ENGINEER — Jan Hueser — No. C050215 — Exp. 6-30-23 — CIVIL — STATE OF CALIFORNIA

The State of California or its officers or agents shall not be responsible for the accuracy or completeness of scanned copies of this plan sheet.

CITY OF EAST PALO ALTO
1960 TATE STREET
EAST PALO ALTO, CA 94303

AECOM
2020 L STREET, SUITE 400
SACRAMENTO, CA 95811

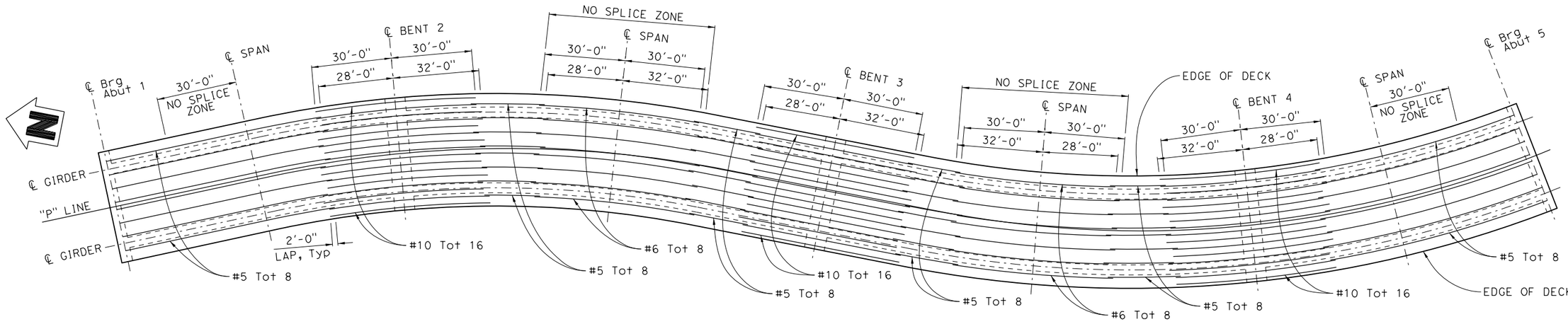

ADDITIONAL TOP LONGITUDINAL REINFORCEMENT

NO SCALE

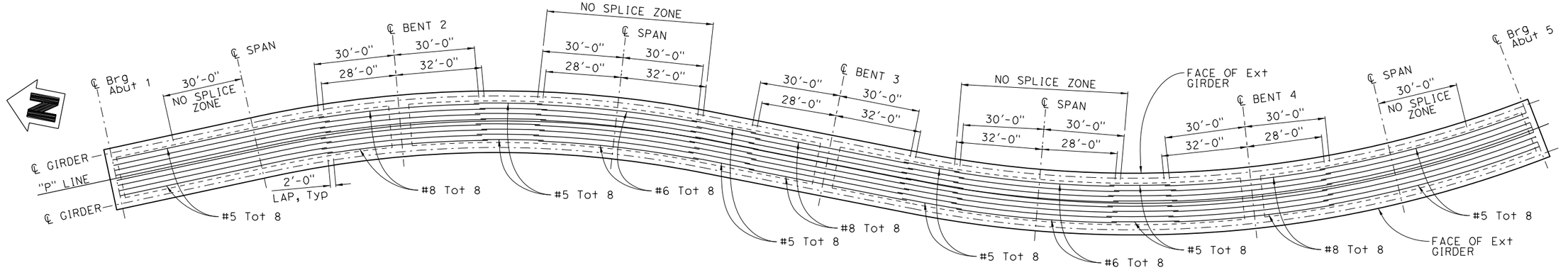

ADDITIONAL BOTTOM LONGITUDINAL REINFORCEMENT

NO SCALE

Norbert Gee — DESIGN OVERSIGHT 10/03/2022 — SIGN OFF DATE		DESIGN	BY J. Hueser	CHECKED K. Lee	PREPARED FOR THE STATE OF CALIFORNIA DEPARTMENT OF TRANSPORTATION
		DETAILS	BY H. Sullivan	CHECKED K. Lee	
		QUANTITIES	BY J. Hueser	CHECKED S. Kwong	

Syed Kazmi — PROJECT ENGINEER

BRIDGE NO. 35-0359 — POST MILES 0.9

UNIVERSITY AVENUE POC
GIRDER REINFORCEMENT

DESIGN DETAIL SHEET (ENGLISH) (REV. 03/14/12)

ORIGINAL SCALE IN INCHES FOR REDUCED PLANS 0 1 2 3

UNIT: 0743
PROJECT NUMBER & PHASE: 04000007591 CONTRACT No.: 04-272824

DISREGARD PRINTS BEARING EARLIER REVISION DATES →

REVISION DATES				SHEET	OF
08-09-22	11-8-20	10-25-21	03-08-22	17	26

FILE => $REQUEST

USERNAME => $USER DATE PLOTTED => $DATE TIME PLOTTED => $TIME

DIST	COUNTY	ROUTE	POST MILES TOTAL PROJECT	SHEET No	TOTAL SHEETS
04	SM	101	0.8/1.1	128	136

Jan M Hueser 08-09-22
REGISTERED CIVIL ENGINEER DATE

9-30-22
PLANS APPROVAL DATE

REGISTERED PROFESSIONAL ENGINEER
Jan Hueser
No. C050215
Exp. 6-30-23
CIVIL
STATE OF CALIFORNIA

The State of California or its officers or agents shall not be responsible for the accuracy or completeness of scanned copies of this plan sheet.

CITY OF EAST PALO ALTO
1960 TATE STREET
EAST PALO ALTO, CA 94303

AECOM
2020 L STREET, SUITE 400
SACRAMENTO, CA 95811

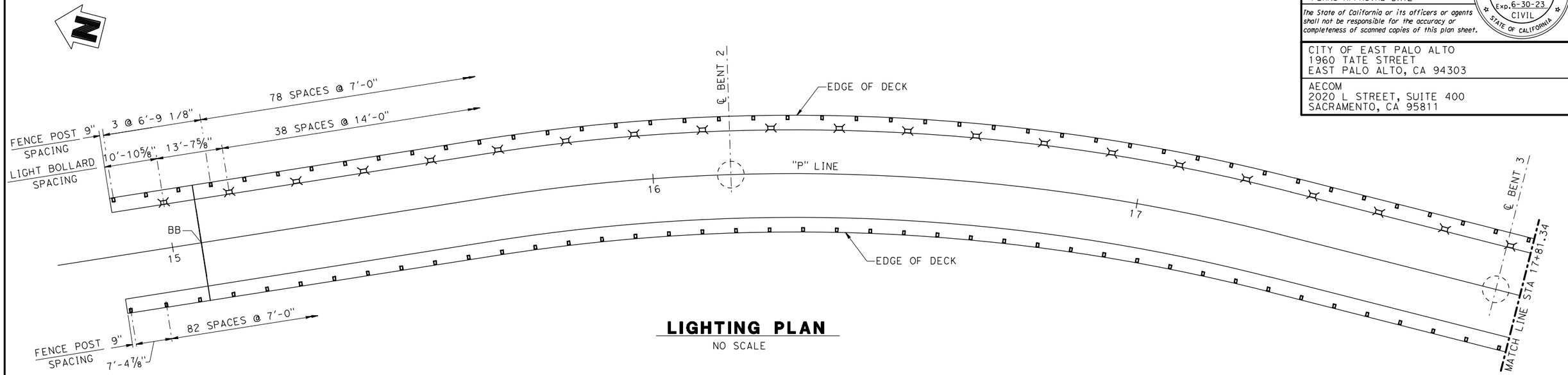

LIGHTING PLAN
NO SCALE

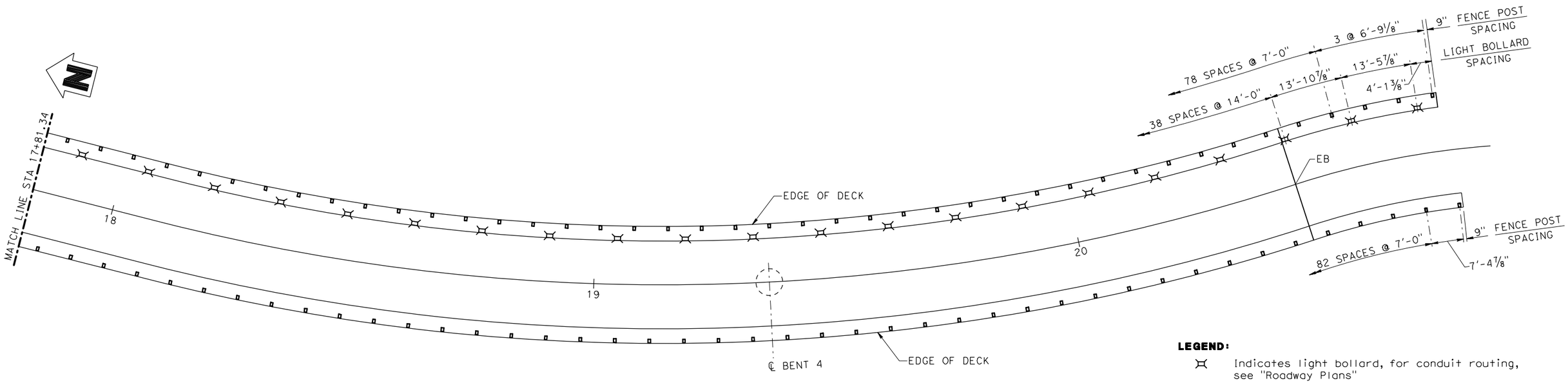

LIGHTING PLAN
NO SCALE

LEGEND:

- Indicates light bollard, for conduit routing, see "Roadway Plans"
- Indicates fence post

Norbert Gee
DESIGN OVERSIGHT
10/03/2022
SIGN OFF DATE

DESIGN DETAIL SHEET (ENGLISH) (REV. 03/14/12)

	BY	CHECKED
DESIGN	J. Hueser	K. Lee
DETAILS	H. Sullivan	K. Lee
QUANTITIES	J. Hueser	S. Kwong

ORIGINAL SCALE IN INCHES FOR REDUCED PLANS 0 1 2 3

PREPARED FOR THE STATE OF CALIFORNIA DEPARTMENT OF TRANSPORTATION

Syed Kazmi
PROJECT ENGINEER

UNIT: 0743
PROJECT NUMBER & PHASE: 040000007591 CONTRACT No.: 04-272824

FILE => $REQUEST

BRIDGE NO.	35-0359
POST MILES	0.9

UNIVERSITY AVENUE POC
BRIDGE LIGHTING PLAN

DISREGARD PRINTS BEARING EARLIER REVISION DATES →

REVISION DATES				SHEET	OF
08-09-22	11-9-20	10-28-21	03-08-22	18	26

USERNAME => $USER DATE PLOTTED => $DATE TIME PLOTTED => $TIME

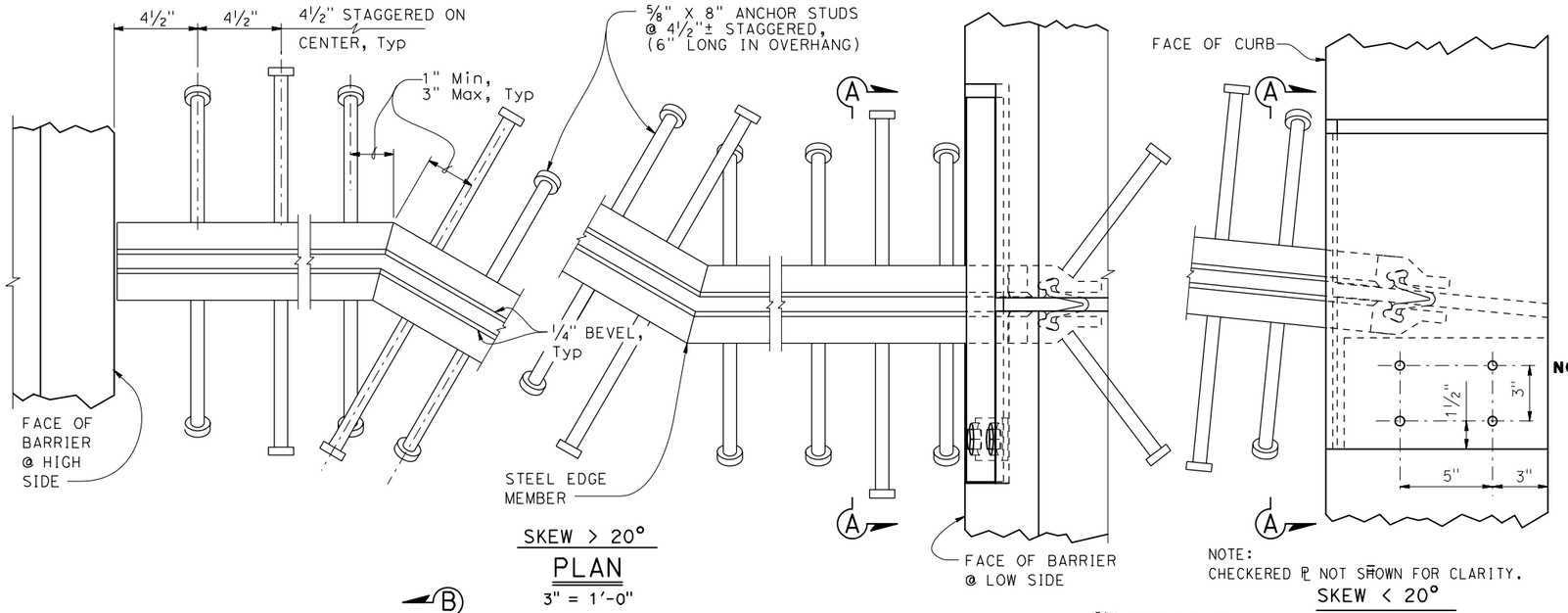

SKEW > 20°

PLAN

3" = 1'-0"

NOTE:
CHECKERED ℄ NOT SHOWN FOR CLARITY.

SKEW < 20°

PLAN

3" = 1'-0" (2)

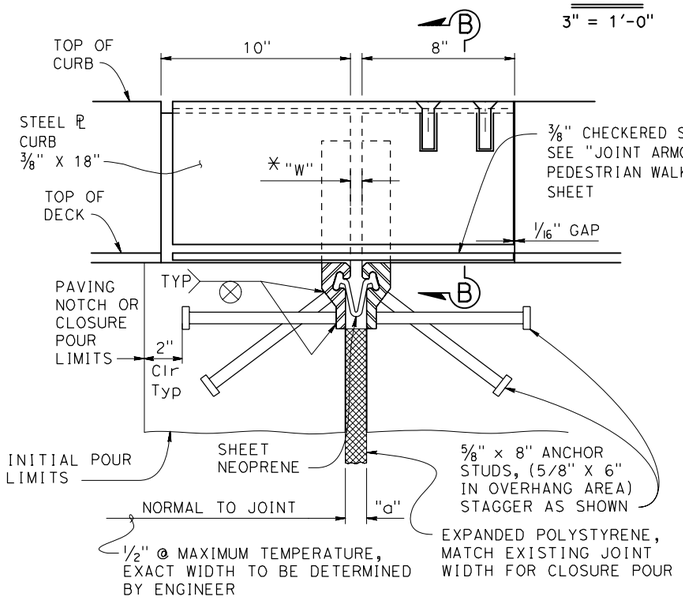

(2) SECTION A-A

3" = 1'-0"

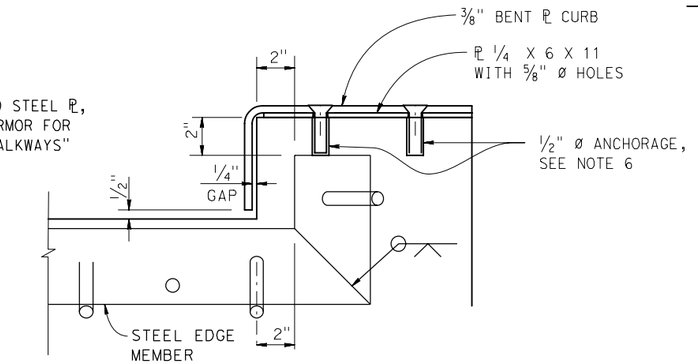

NOTE:
CHECKERED ℄ NOT SHOWN FOR CLARITY.

SECTION B-B (2)

3" = 1'-0"

JOINT INFORMATION			"a" DIMENSIONS		
LOCATION	MOVEMENT RANGE (MR)	SKEW	WINTER	SPRING & FALL	SUMMER
ABUT 1	3½"	0	1¾"	1⅜"	⅞"
ABUT 5	3½"	0	1¾"	1⅜"	⅞"

* TO SET MINIMUM JOINT OPENING "W"

"W" = { ½" Minimum; a_C = 0.0000060; a_S = 0.0000065; ½"+[(Max Str temperature in °F)-(actual Str temperature in °F)]*(a_C or a_S)(12)(contributory L in feet) }

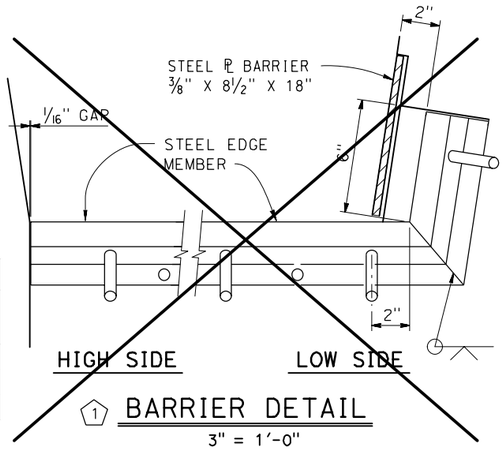

(1) BARRIER DETAIL

3" = 1'-0"

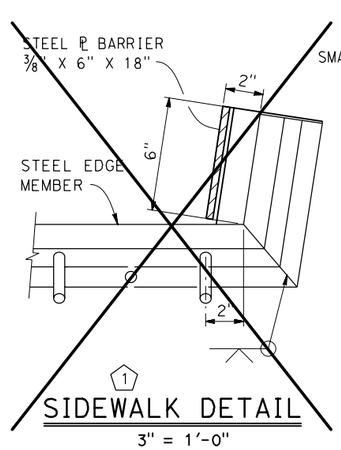

(1) SIDEWALK DETAIL

3" = 1'-0"

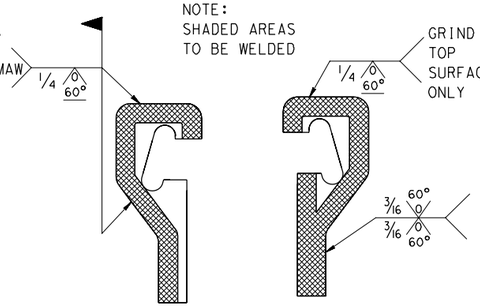

SCHEMATIC FIELD WELD DETAIL

NO SCALE

SCHEMATIC SHOP WELD DETAIL

NO SCALE

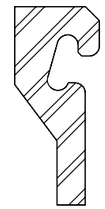

SCHEMATIC STEEL EDGE MEMBER

NO SCALE

NOTES:

1. Alternatively, fillet or complete penetration welds may be used at anchor studs.
2. Alternate types of anchor studs may be permitted subject to the authorization by the Engineer.
3. Joint seal assembly to be used in conjunction with closure pour. (See other sheets for limits). Closure pour shall not be placed until final deck surface is within the tolerances specified.
4. Use joint at crown of roadway, at any change in transverse slope in deck and at changes in horizontal direction. Place other joints at or near lanes. All metal parts to be painted or galvanized after fabrication.
5. Sheet Neoprene shall be fabricated in one continuous piece and shall be fabricated to bend around corners. Field splices of the neoprene are not allowed.
6. (3) Insert assembly or expansion anchorage for ½" x 2½" flathead cap screws. Use installation bolts extended ½" minimum past nut and coat with bond breaker, after concrete has cured, remove installation bolts, install A449 cap screws using a threadlocking compound.
7. Use sidewalk detail at all sidewalk joints. Use barrier detail low side at both sides if the roadway is crowned, or if the difference in elevation between the ends of the seal is 6 inches or less.
8. a_C, a_S, are the thermal expansion coefficients for concrete and steel respectively.
9. Anchor studs shall conform to ASTM A108.

DIST	COUNTY	ROUTE	POST MILES TOTAL PROJECT	SHEET No	TOTAL SHEETS
04	SM	101	0.8/1.1	129	136

Jan M Hueser 08-09-22
REGISTERED CIVIL ENGINEER DATE

9-30-22
PLANS APPROVAL DATE

REGISTERED PROFESSIONAL ENGINEER — Jan Hueser — No. C050215 — Exp. 6-30-23 — CIVIL — STATE OF CALIFORNIA

The State of California or its officers or agents shall not be responsible for the accuracy or completeness of scanned copies of this plan sheet.

CITY OF EAST PALO ALTO
1960 TATE STREET
EAST PALO ALTO, CA 94303

AECOM
2020 L STREET, SUITE 400
SACRAMENTO, CA 95811

BRIDGE STANDARD DETAILS

xs8-010 (FILE NO.) | October 2019 (APPROVAL DATE)

The components of the Bridge Standard Details have been prepared under the responsible charge of the Technical Owner, a registered civil engineer in the State of California

MODIFICATIONS SHOWN:
(1) DELETED DETAIL (2) REVISED DETAIL (3) REVISED NOTES

STATE OF CALIFORNIA
DEPARTMENT OF TRANSPORTATION

DIVISION OF ENGINEERING SERVICES

BRIDGE NO. 35-0359
POST MILES 0.9

SPECIAL DETAILS

UNIVERSITY AVENUE POC

STRIP JOINT SEAL ASSEMBLY MAXIMUM MOVEMENT RATING = 4"

Refer to: http://www.dot.ca.gov/hq/esc/techpubs/manual/bridgemanuals/bridge-standard-details-sheets/index.html

ORIGINAL SCALE IN INCHES FOR REDUCED PLANS 0 1 2 3

UNIT: 0743
PROJECT NUMBER & PHASE: 04000007591 CONTRACT No.: 04-272824

DISREGARD PRINTS BEARING EARLIER REVISION DATES →

REVISION DATES				SHEET	OF
08-09-22	11-19-20	10-28-21	03-08-22	19	26

FILE => $REQUEST

USERNAME => $USER DATE PLOTTED => $DATE TIME PLOTTED => $TIME

DIST	COUNTY	ROUTE	POST MILES TOTAL PROJECT	SHEET No	TOTAL SHEETS
04	SM	101	0.8/1.1	130	136

Jan M Hueser 08-09-22
REGISTERED CIVIL ENGINEER — DATE

9-30-22
PLANS APPROVAL DATE

REGISTERED PROFESSIONAL ENGINEER — Jan Hueser — No. C050215 — Exp. 6-30-23 — CIVIL — STATE OF CALIFORNIA

The State of California or its officers or agents shall not be responsible for the accuracy or completeness of scanned copies of this plan sheet.

CITY OF EAST PALO ALTO
1960 TATE STREET
EAST PALO ALTO, CA 94303

AECOM
2020 L STREET, SUITE 400
SACRAMENTO, CA 95811

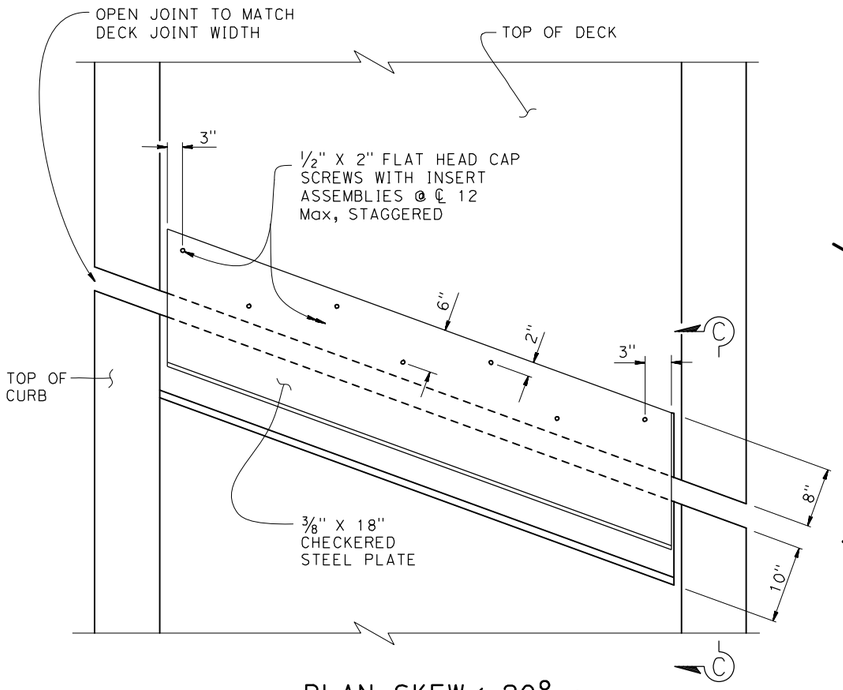

PLAN SKEW ≤ 20° (2)

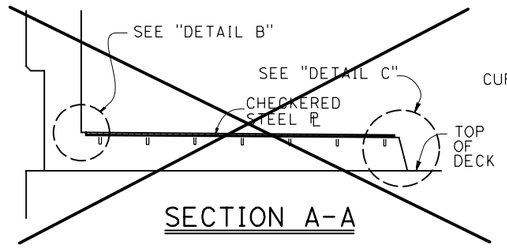

SECTION A-A

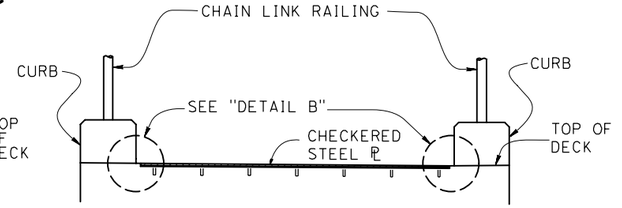

SECTION B-B (2)
NO SCALE

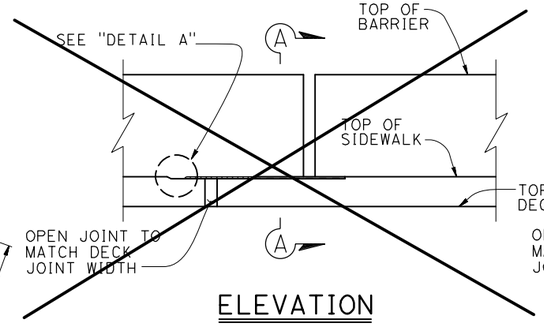

ELEVATION

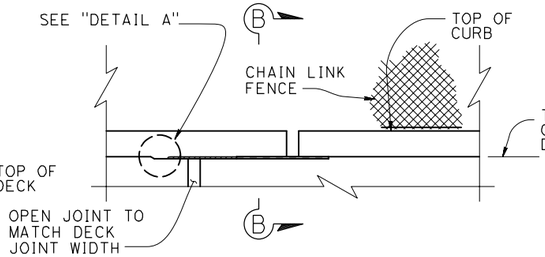

ELEVATION (2)
~~NOTE: Barrier not shown for clarity~~

NOTES:
1. Utility openings and expansion joints not shown for clarity
2. Recess concrete ½" for plates
3. Plates to be galvanized
4. Architectural treatment not shown
5. (3) Insert assembly or expansion anchorage for ½" x 2" flat head cap screws. Use installation bolts extended ½" minimum past nut and coat with bond breaker. After concrete has cured, remove installation bolts, install A449 cap screws using thread locking compound.

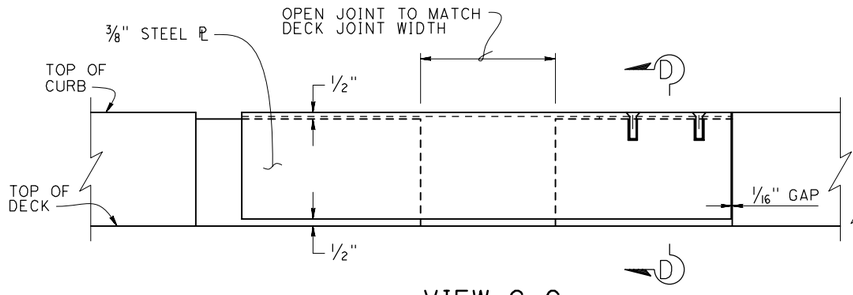

VIEW C-C (2)

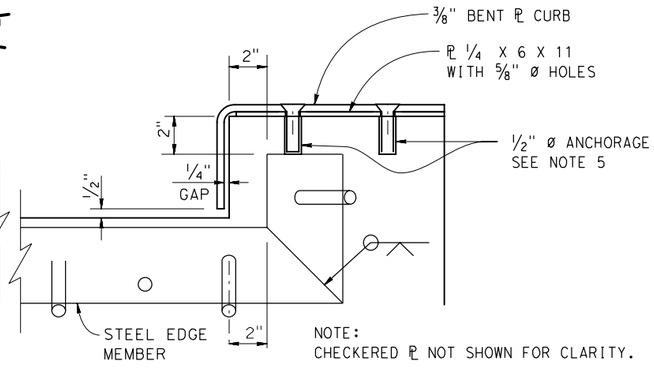

SECTION D-D (2)

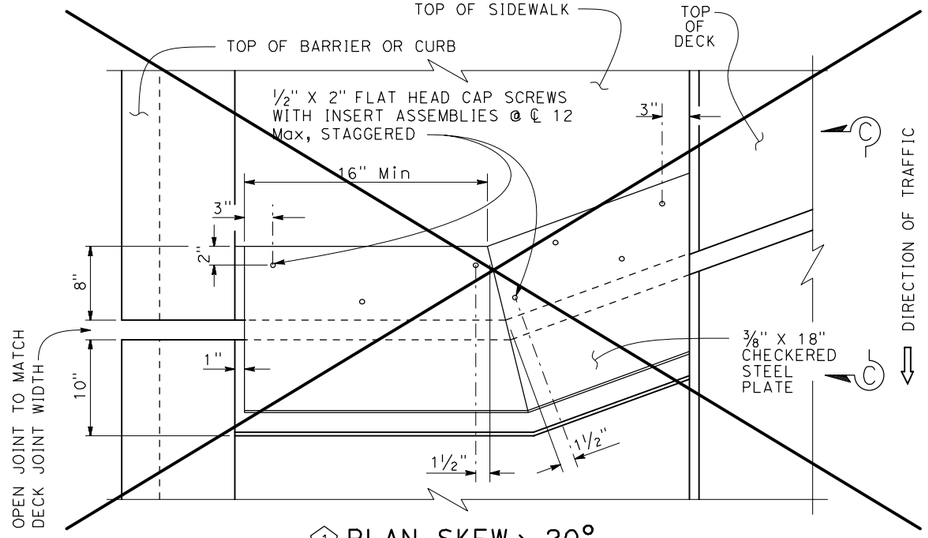

(1) PLAN SKEW > 20°

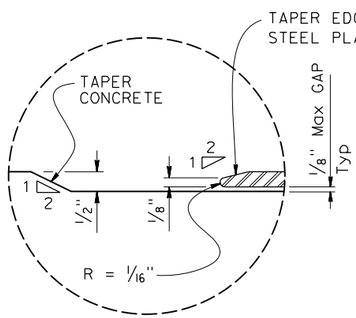

DETAIL A

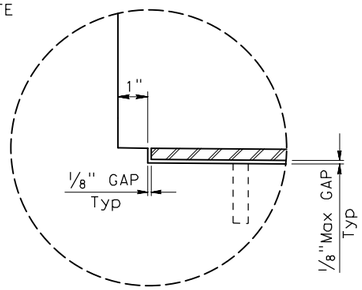

DETAIL B

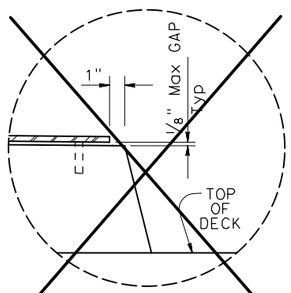

(1) DETAIL C

NO SCALE

BRIDGE STANDARD DETAILS		
xs8-050	October 2018	*The components of the Bridge Standard Details have been prepared under the responsible charge of the Technical Owner, a registered civil engineer in the State of California*
FILE NO.	APPROVAL DATE	

MODIFICATIONS SHOWN:
(1) DELETED DETAIL (2) REVISED DETAIL (3) REVISED NOTES

STATE OF CALIFORNIA
DEPARTMENT OF TRANSPORTATION

DIVISION OF ENGINEERING SERVICES

BRIDGE NO.	35-0359
POST MILES	0.9

SPECIAL DETAILS
UNIVERSITY AVENUE POC
JOINT ARMOR FOR PEDESTRIAN WALKWAYS

Refer to: http://www.dot.ca.gov/hq/esc/techpubs/manual/bridgemanuals/bridge-standard-details-sheets/index.html

ORIGINAL SCALE IN INCHES FOR REDUCED PLANS 0 1 2 3

UNIT: 0743
PROJECT NUMBER & PHASE: 04000007591 CONTRACT No.: 04-272824

DISREGARD PRINTS BEARING EARLIER REVISION DATES →

REVISION DATES				SHEET	OF
08-09-22	~~11-9-20~~	~~10-29-21~~	~~03-04-22~~	20	26

FILE => $REQUEST
USERNAME => $USER DATE PLOTTED => $DATE TIME PLOTTED => $TIME

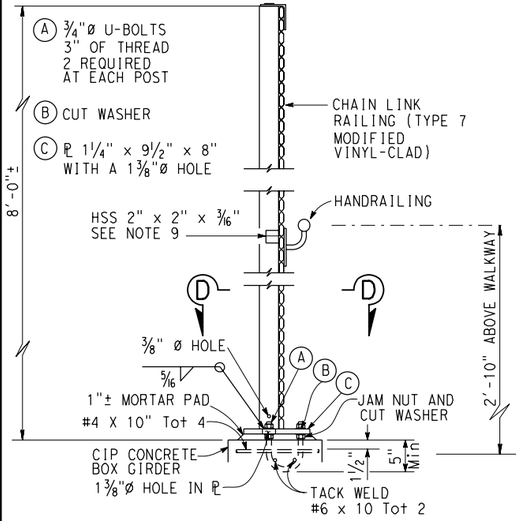

TYPICAL POST DETAIL 1

1" = 1'-0"

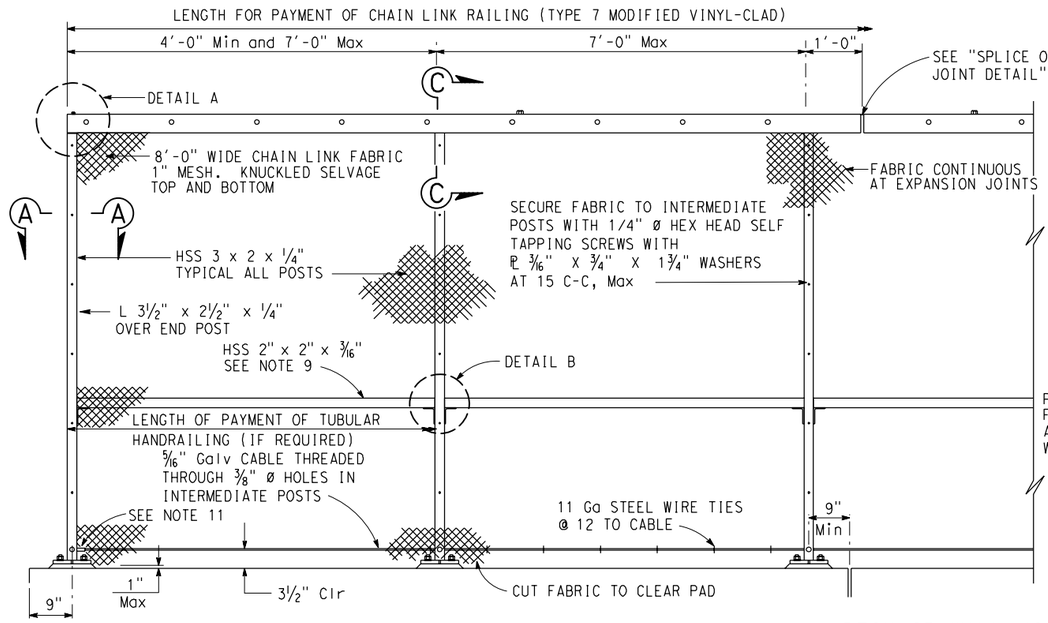

END POST

DECK OR WALL JOINT

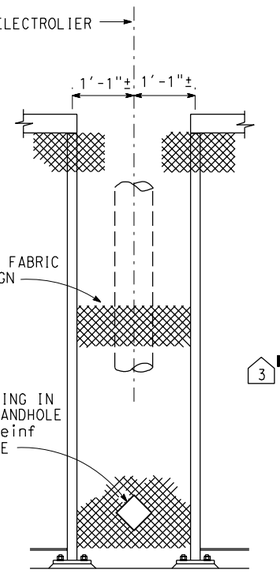

SIGN PANEL OR ELECTROLIER

3 NOTES:

1. Railing assembly except chain link fabric to be galvanized after fabrication
2. Railing must conform to horizontal and vertical alignment. Post must be vertical. Horizontal angle must be bent to conform to horizontal alignment if radius is 150'-0" or less.
3. Horizontal angle shall be continuous over not less than two intermediate posts, except that a shorter length is permitted at expansion joints and other rail discontinuities.
4. When railing is placed on curved horizontal alignment with radius of 150'-0" or less, drill ½"ø x 3" deep hole in slab and set in epoxy adhesives ⅜"ø welded eyebolt for 5/16" cable to limit the mid-ordinate distance between the 5/16" cable and curve to be 1" Max.
5. Place fabric parallel to slope.
6. Alternative details may be submitted by the Contractor for Engineer's approval.
7. Provide thimbles at all cable loops.
8. Peen all exposed bolts.
9. HSS 2" x 2" x 3/16" required for curves with radius of 150'-0" or less. Bend to conform to curve.
10. Expansion joint same dimension as expansion joint in deck or wall. Increase slotted hole length and splice ℄ length correspondingly.
11. Anchor 5/16" galvanized cable at end post and end posts adjacent to electrolier openings of deck or wall joints with ½"ø stud socket assembly or ½"ø welded eyebolt and crimped sleeve clamp. Provide 1½" minimum take-up at each anchorage.
12. Design valid for bridges with the top of chain link railing type 7 (Mod) equal to or less than 260' height above surrounding ground surfaces.
13. For Section D-D, see "CHAIN LINK RAILING (TYPE 7 Modified Vinyl-Clad) DETAILS No. 2" sheet

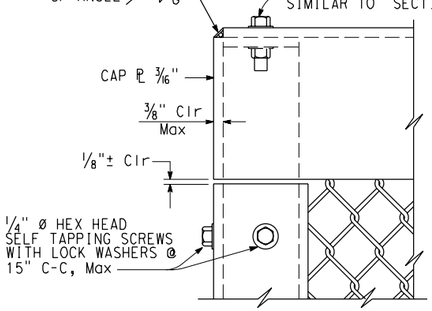

DETAIL A

6" = 1'-0"

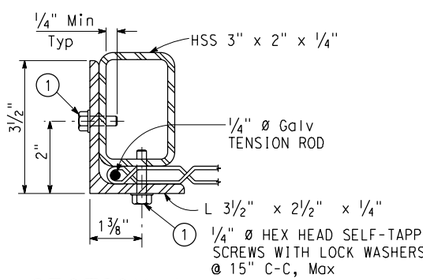

SECTION A-A

1 6" = 1'-0"

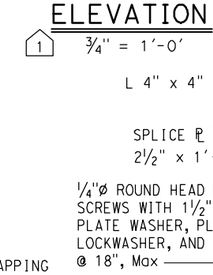

SECTION B-B

6" = 1'-0"

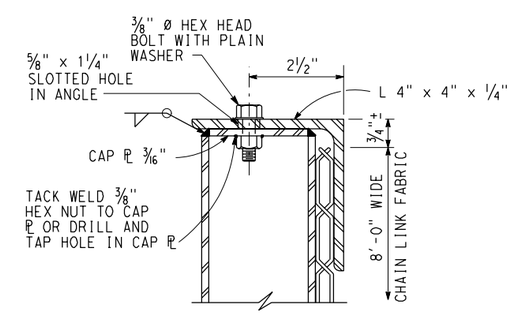

SECTION C-C

6" = 1'-0"

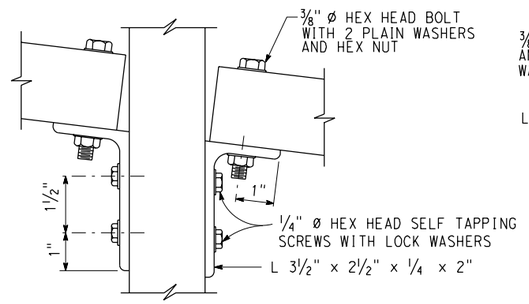

DETAIL B

6" = 1'-0"

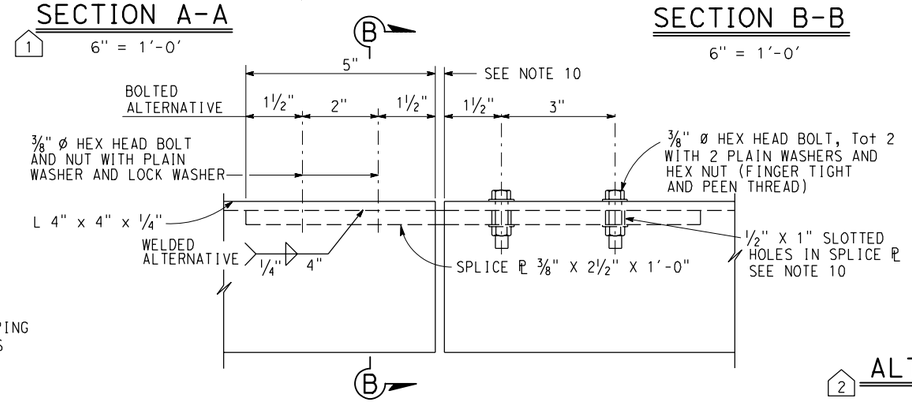

SPLICE OR EXPANSION JOINT DETAIL

6" = 1'-0"

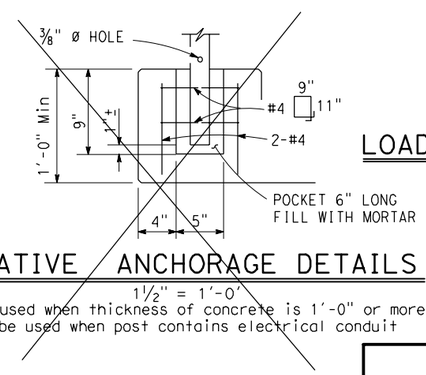

ALTERNATIVE ANCHORAGE DETAILS 2

1½" = 1'-0"

May be used when thickness of concrete is 1'-0" or more
Not to be used when post contains electrical conduit

GENERAL NOTES
LOAD AND RESISTANCE FACTOR DESIGN

DESIGN:
AASHTO LRFD Bridge Design Specifications, 8th Edition 2017 with California Amendments April 2019

CONCRETE:
f_y = 60ksi f'_c = 3.6 ksi

STRUCTURAL STEEL:
HSS: f_y = 50 ksi

DIST	COUNTY	ROUTE	POST MILES TOTAL PROJECT	SHEET No	TOTAL SHEETS
04	SM	101	0.8/1.1	131	136

Jan M Hueser 08-09-22
REGISTERED CIVIL ENGINEER DATE

9-30-22
PLANS APPROVAL DATE

REGISTERED PROFESSIONAL ENGINEER — Jan Hueser — No. C050215 — Exp. 6-30-23 — CIVIL — STATE OF CALIFORNIA

The State of California or its officers or agents shall not be responsible for the accuracy or completeness of scanned copies of this plan sheet.

CITY OF EAST PALO ALTO
1960 TATE STREET
EAST PALO ALTO, CA 94303

AECOM
2020 L STREET, SUITE 400
SACRAMENTO, CA 95811

BRIDGE STANDARD DETAILS		
xs16-220-1 (FILE NO.)	July 2020 (APPROVAL DATE)	*The components of the Bridge Standard Details have been prepared under the responsible charge of the Technical Owner, a registered civil engineer in the State of California*

MODIFICATIONS SHOWN:
1 REVISED DETAIL 3 REVISED NOTES
2 DELETED DETAIL

STATE OF CALIFORNIA
DEPARTMENT OF TRANSPORTATION

DIVISION OF ENGINEERING SERVICES

BRIDGE NO.	35-0359
POST MILES	0.9

SPECIAL DETAILS
UNIVERSITY AVENUE POC
CHAIN LINK RAILING (TYPE 7 MODIFIED VINYL-CLAD) DETAILS No. 1

Refer to: http://www.dot.ca.gov/hq/esc/techpubs/manual/bridgemanuals/bridge-standard-detail-sheets/index.html

ORIGINAL SCALE IN INCHES FOR REDUCED PLANS 0 1 2 3

UNIT: 0743
PROJECT NUMBER & PHASE: 04000007591
CONTRACT No.: 04-272824

DISREGARD PRINTS BEARING EARLIER REVISION DATES →

REVISION DATES				SHEET	OF
08-09-22	11-9-20	10-29-21	03-08-22	21	26

FILE => $REQUEST

USERNAME => $USER DATE PLOTTED => $DATE TIME PLOTTED => $TIME

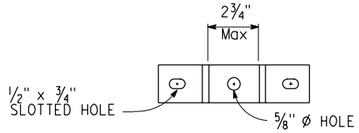

POST BRACKET

3" = 1'-0"

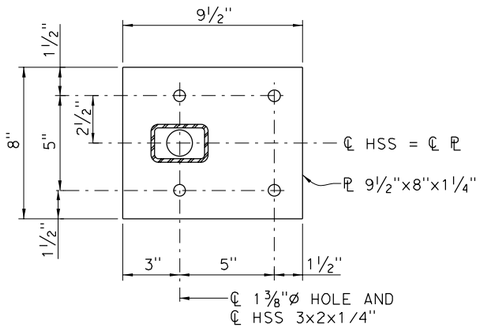

1 SECTION D-D

3" = 1'-0"

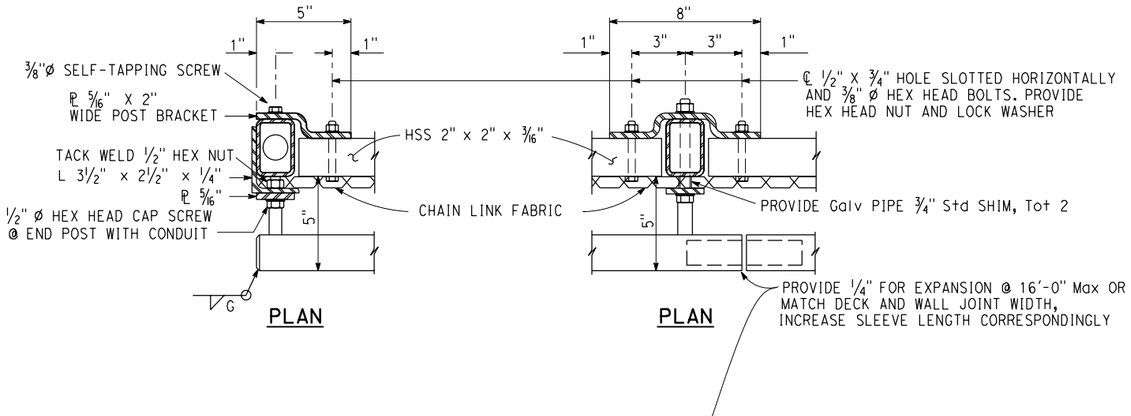

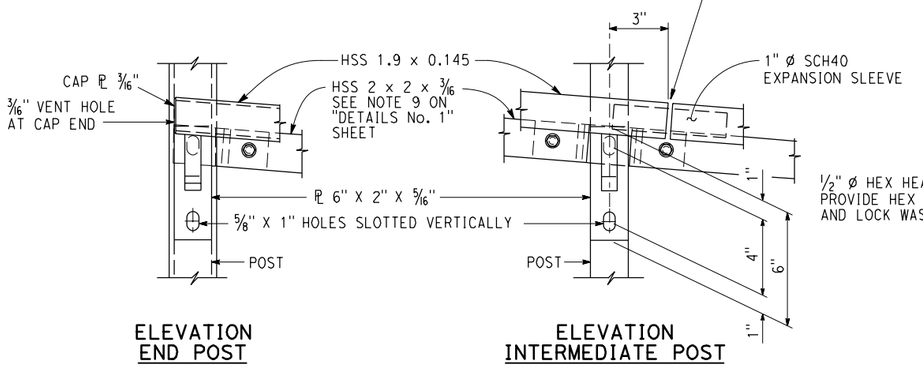

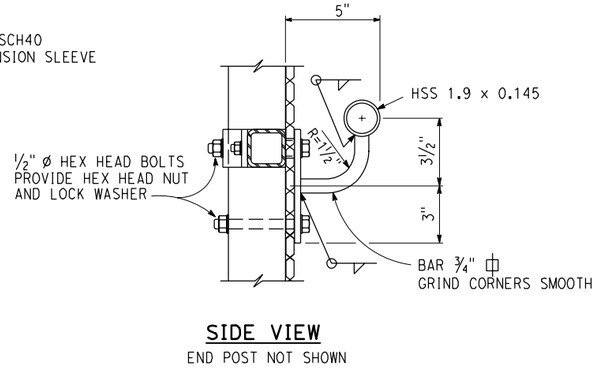

TUBULAR HANDRAILING BRACKET DETAILS

NO SCALE

NOTES:

2

1. FOR TYPICAL POST DETAIL, SEE "CHAIN LINK RAILING (TYPE 7 MODIFIED VINYL-CLAD) DETAILS No. 1" SHEET.
2. FOR LOCATION OF SECTION D-D, SEE "CHAIN LINK RAILING (TYPE 7 MODIFIED VINYL-CLAD) DETAILS No. 1" SHEET.

DIST	COUNTY	ROUTE	POST MILES TOTAL PROJECT	SHEET No	TOTAL SHEETS
04	SM	101	0.8/1.1	132	136

Jan M Hueser — 08-09-22
REGISTERED CIVIL ENGINEER — DATE

9-30-22
PLANS APPROVAL DATE

REGISTERED PROFESSIONAL ENGINEER — Jan Hueser — No. C050215 — Exp. 6-30-23 — CIVIL — STATE OF CALIFORNIA

The State of California or its officers or agents shall not be responsible for the accuracy or completeness of scanned copies of this plan sheet.

CITY OF EAST PALO ALTO
1960 TATE STREET
EAST PALO ALTO, CA 94303

AECOM
2020 L STREET, SUITE 400
SACRAMENTO, CA 95811

BRIDGE STANDARD DETAILS

xs16-220-2 (FILE NO.) | July 2020 (APPROVAL DATE)

The components of the Bridge Standard Details have been prepared under the responsible charge of the Technical Owner, a registered civil engineer in the State of California

MODIFICATIONS SHOWN:
1 ADDED DETAIL
2 ADDED NOTES

STATE OF CALIFORNIA
DEPARTMENT OF TRANSPORTATION

DIVISION OF ENGINEERING SERVICES

BRIDGE NO. 35-0359
POST MILES 0.9

SPECIAL DETAILS

UNIVERSITY AVENUE POC

CHAIN LINK RAILING (TYPE 7 MODIFIED VINYL-CLAD) DETAILS No. 2

Refer to: http://www.dot.ca.gov/hq/esc/techpubs/manual/bridgemanuals/bridge-standard-detail-sheets/index.html

ORIGINAL SCALE IN INCHES FOR REDUCED PLANS 0 1 2 3

UNIT: 0743
PROJECT NUMBER & PHASE: 04000007591
CONTRACT No.: 04-272824

DISREGARD PRINTS BEARING EARLIER REVISION DATES →

REVISION DATES				SHEET	OF
08-09-22	11-9-20	10-28-21	03-08-22	22	26

USERNAME => $USER DATE PLOTTED => $DATE TIME PLOTTED => $TIME
FILE => $REQUEST

BENCH MARK

All elevations based on vertical datum NAVD88.
All stations and offsets based on horizontal datum NAD83.

NOTES

1. This LOTB Sheet was prepared in accordance with the Caltrans Soil and Rock Logging, Classification, and Presentation Manual (2010).

DIST	COUNTY	ROUTE	POST MILES TOTAL PROJECT	SHEET No	TOTAL SHEETS
04	SM	101	0.8/1.1	133	136

GEOTECHNICAL PROFESSIONAL — 08-09-22 DATE

9-30-22
PLANS APPROVAL DATE

REGISTERED PROFESSIONAL ENGINEER — Stephen Huang — No. C 42289 — Exp. 3-31-22 — CIVIL — STATE OF CALIFORNIA

The State of California or its officers or agents shall not be responsible for the accuracy or completeness of electronic copies of this plan sheet.

CITY OF EAST PALO ALTO
1960 TATE STREET
EAST PALO ALTO, CA 94303

AECOM
4 N. Second Street, Suite 675
SAN JOSE, CA 95113

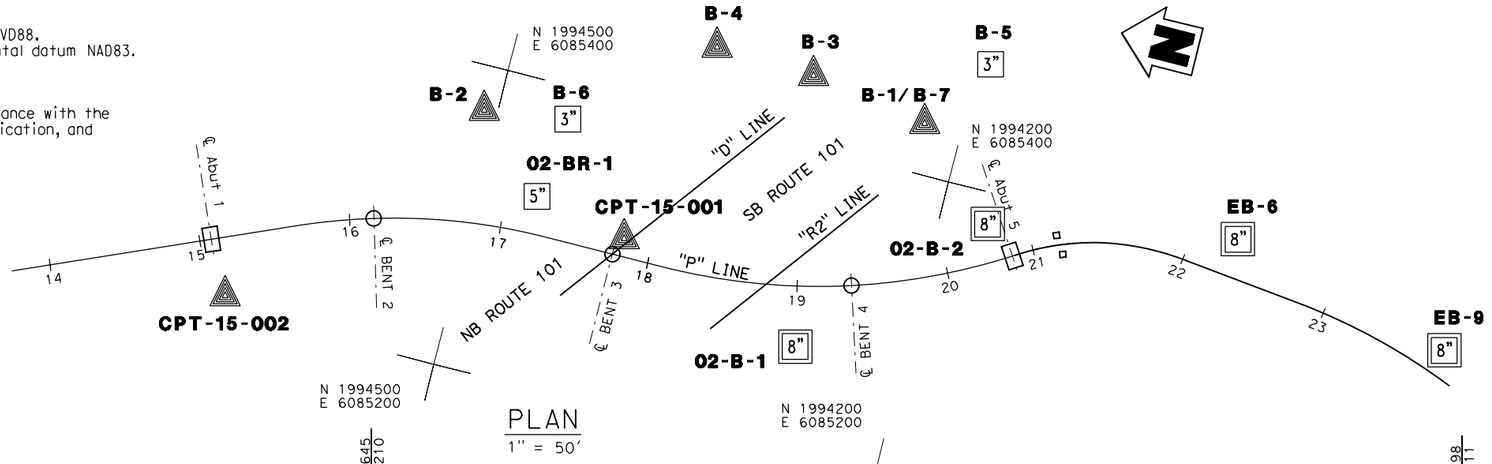

PLAN
1" = 50'

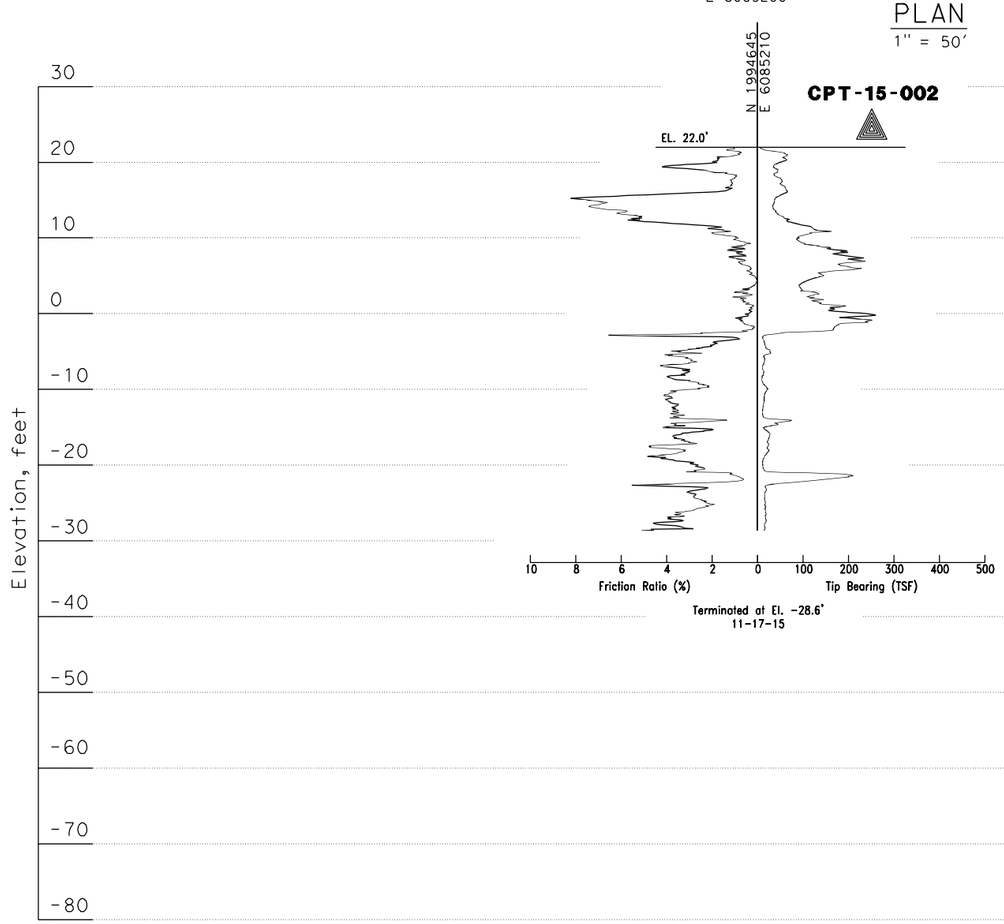

PROJECT EXPLORATION LOCATION TABLE

Hole ID	Alignment Name	Station and Offset
CPT-15-002	"P" LINE	15+11 38' Rt
CPT-15-001	"P" LINE	17+81 12' Lt

HISTORIC EXPLORATION LOCATION TABLE

Hole ID	Alignment Name	Station and Offset
EB-9	"P" LINE	23+75 10 Lt
EB-6	"P" LINE	22+30 25' Lt
02-BR-1	"P" LINE	17+20 25' Lt
02-B-1	"P" LINE	19+00 40' Rt
02-B-2	"P" LINE	20+75 25' Lt
B1/B7	"P" LINE	20+50 100' Lt
B-2	"P" LINE	16+75 75' Lt
B-3	"P" LINE	19+10 140' Lt
B-4	"P" LINE	18+10 150' Lt
B-5	"P" LINE	21+00 125' Lt
B-6	"P" LINE	17+30 75' Lt

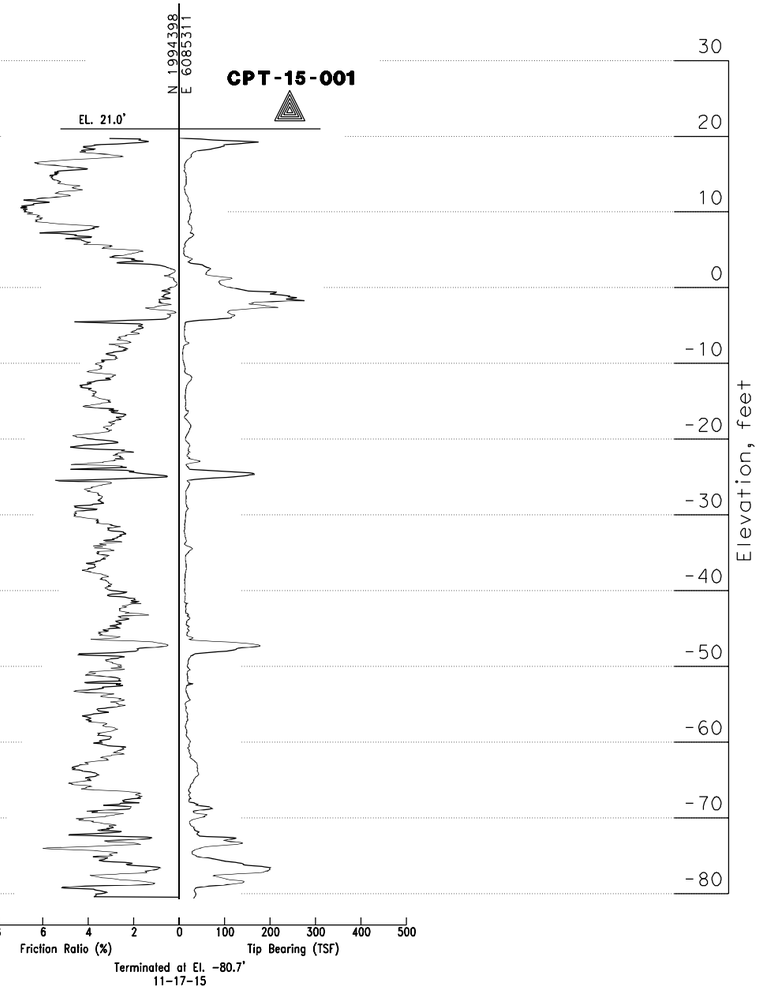

Norbert Gee
DESIGN OVERSIGHT
10/03/2022
SIGN OFF DATE

DRAWN BY: E.Garnica
CHECKED BY: A. M. Moore

Stacy Ball
FIELD INVESTIGATION BY:
DATE: 11/2015

PREPARED FOR THE STATE OF CALIFORNIA DEPARTMENT OF TRANSPORTATION

S. Huang
PROJECT ENGINEER

BRIDGE NO. 35-0359
POST MILES 0.9

UNIVERSITY AVENUE POC
LOG OF TEST BORINGS 1 OF 4

GS GEOTECHNICAL LOG OF TEST BORINGS SHEET (ENGLISH) (REV. 7/16/10)

ORIGINAL SCALE IN INCHES FOR REDUCED PLANS 0 1 2 3

UNIT: 0703
PROJECT NUMBER & PHASE: 04000007591
CONTRACT NO.: 04-272824

DISREGARD PRINTS BEARING EARLIER REVISION DATES →

REVISION DATES				SHEET	OF
10-29-21	08-09-22			23	26

FILE => $REQUEST

USERNAME => $USER DATE PLOTTED => $DATE TIME PLOTTED => $TIME

BRIDGE DEPARTMENT

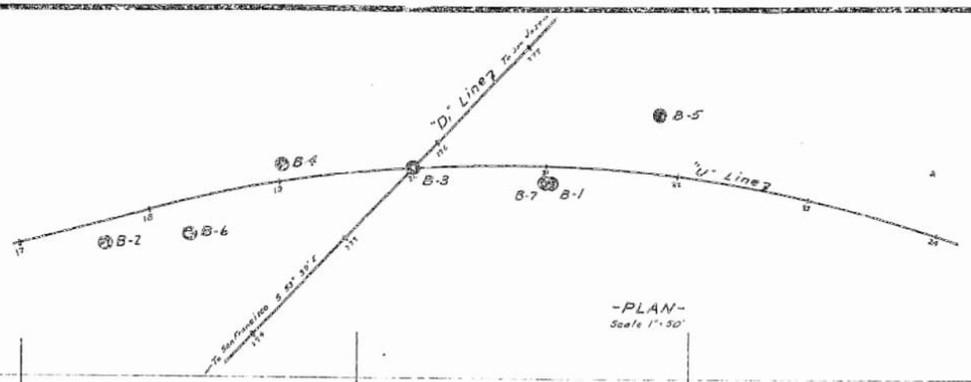

-PLAN-
Scale 1"=30'

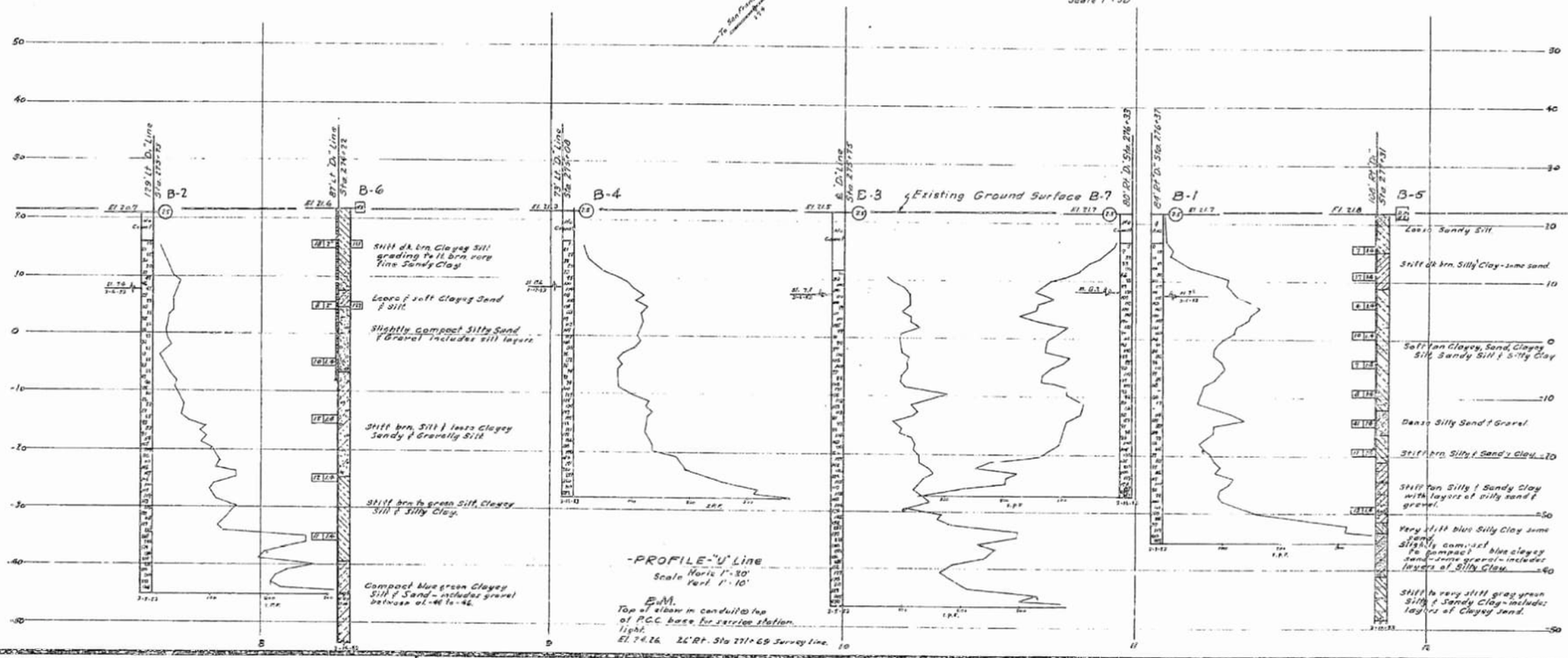

-PROFILE-"U" Line
Horiz 1"=30'
Vert 1"=10'

B.M.
Top of elbow in conduit @ top of P.C.C. base for service station light.
El. 74.26 26'Rt. Sta 271+69 Survey Line.

REGISTERED PROFESSIONAL ENGINEER
Stephen Huang
No. C 42289
Exp. 3-31-22
CIVIL
STATE OF CALIFORNIA

DIVISION OF ENGINEERING SERVICES - GEOTECHNICAL SERVICES					
As-Built Log of Test Borings sheet is considered an informational document only. As such, the State of California registration seal with signature, license number and registration certificate expiration date confirm that this is a true and accurate copy of the original document. This drawing is available and presented only for the convenience of any bidder, contractor or other interested party.					
DIST.	COUNTY	ROUTE	POST MILES-TOTAL PROJECT	Sheet No.	Total Sheets
04	SM	101	0.8/1.1	134	136

REGISTERED CIVIL ENGINEER — DATE 08-09-2022

UNIVERSITY AVENUE POC

LOG OF TEST BORINGS (2 OF 4)

NOTE: A COPY OF THIS LOG OF TEST BORINGS IS AVAILABLE AT OFFICE OF STRUCTURE MAINTENANCE AND INVESTIGATIONS, SACRAMENTO, CALIFORNIA

UNIT: 0703
PROJECT NUMBER & PHASE: 04000007591

BRIDGE No.	Sheet	of
35-0359	24	26

Revisions made to this Log of Test Borings from the original ____ Log of Test Borings are the addition of the following table and notes:

Boring	Station	Offset from "P" Line
B-2	16+75	75' Lt
B-6	17+30	75' Rt
B-4	18+10	150' Lt
B-3	19+10	140' Lt
B-1/B-7	20+50	100' Lt
B-5	21+00	125' Lt

AS BUILT PLANS
Contract No. 57-470227
Date Completed
Document No. 4000023422

CONTRACT No. 57-470227
DATE ACCEPTED June 4, 1998
AS BUILT
RESIDENT ENGINEER W.J. Smith
REVISIONS BY ____ DATE ____

CLASSIFICATION OF MATERIAL BASED ON STANDARD GRADE SIZE LIMITS

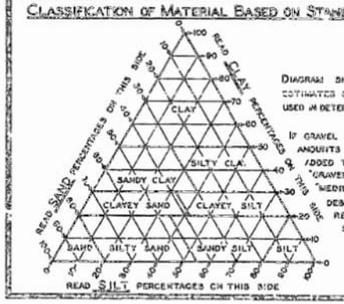

DIAGRAM SHOWING THE BASIS FOR ESTIMATES OF GRADE SIZE DISTRIBUTION USED IN DETERMINATION OF CLASS NAMES

IF GRAVEL IS PRESENT IN APPRECIABLE AMOUNTS THE TERM "GRAVELLY" MAY BE ADDED TO THE CLASS NAME, VIZ. "GRAVELLY SAND." THE TERMS "COARSE," "MEDIUM" AND "FINE" WHEN USED TO DESCRIBE GRAVEL, SAND AND SILT REFER TO STANDARD GRADE SIZE LIMITS.

LEGEND OF EARTH MATERIALS

- GRAVEL
- SAND
- SILT
- CLAY
- SANDY CLAY OR CLAYEY SAND
- SANDY SILT OR SILTY SAND
- SILTY CLAY OR CLAYEY SILT
- PEAT AND/OR ORGANIC CLAY
- FILLED MATERIAL
- IGNEOUS ROCK
- SEDIMENTARY ROCK
- METAMORPHIC ROCK

LEGEND OF BORING OPERATIONS

- PLAN OF ANY BORING
- PENETROMETER
- 2½" CONE PENETROMETER
- SAMPLER BORING (DRY)
- ROTARY BORING (WET)
- AUGER BORING (DRY)
- JET BORING
- CORE BORING
- TEST PIT

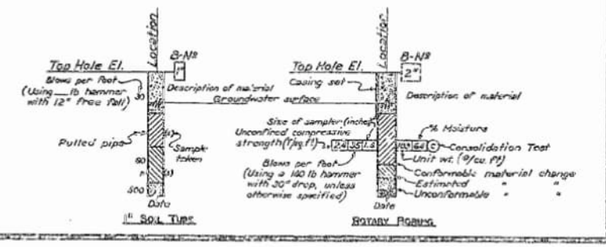

NOTES

THE CONTRACTOR'S ATTENTION IS DIRECTED TO SECTION 2, ARTICLE (c) OF THE STANDARD SPECIFICATIONS AND TO THE SPECIAL PROVISIONS ACCOMPANYING THIS SET OF PLANS. CLASSIFICATION OF EARTH MATERIAL, AS SHOWN ON THIS SHEET IS BASED UPON FIELD INSPECTION AND IS NOT TO BE CONSTRUED TO IMPLY MECHANICAL ANALYSIS.

PENETROMETER BORINGS HAVING A RATE OF PENETRATION MEASURED IN SECONDS PER FOOT ARE DRIVEN WITH A No 2 MCKIERNAN-TERRY AIR HAMMER AT 115 PSI.

STATE OF CALIFORNIA
DEPARTMENT OF PUBLIC WORKS
DIVISION OF HIGHWAYS

UNIVERSITY AVE O.C.

LOG OF TEST BORINGS

SCALE: HORIZ. As shown VERT. shown — BRIDGE 35-113 R — FILE — DRAWING 6-3515-15

84

3515 2 R

I HEREBY CERTIFY THAT THIS IS A TRUE AND ACCURATE COPY OF THE ABOVE DOCUMENT TAKEN UNDER MY DIRECTION AND CONTROL OF THIS DATE IN SACRAMENTO, CALIFORNIA PURSUANT TO AUTHORIZATION BY THE DIRECTOR OF PUBLIC WORKS.

DATE _____ SIGNATURE _____ TITLE _____

BENCH MARK

BM # AB86
NGVD 29. A disc on the easterly curb of the University Avenue Overcrossing
Elev. = 12.927m

LEGEND OF BORING OPERATIONS

ROTARY SAMPLE BORING (WET): Top Hole El.; Casing driven; Boring number; Year boring drilled; Sampler no.; Size of Sampler (mm); Description of material; Total unit weight (kN/m³); % moisture; Unconfined compressive strength (kPa); Sieve analysis; Conformable material change; Estimated material change; GWS Elev. Date measured; Unconformable material change; Number of blows to produce 305 mm of penetration after the initial 152 mm of seating using a 63.5 kg hammer with a 762 mm drop, or as specified; Number of blows required to produce the indicated penetration after an initial 152 mm seating; 50 blows produced the indicated penetration during the initial 152 mm interval; Boring Date.

57 mm CONE PENETRATION BORING: B-No.; Top Hole El.; No count recorded; Pushed; Driving rate in second per 305 mm (using a Stanley no. 156 percussion hammer or as noted); GWS Elev. Date measured; Boring Date.

ELECTRONIC CONE PENETROMETER TEST: Pressure measured on tip element (10cm² area); Pressure measured along sleeve friction element (150cm² area) divided by pressure measured on tip element; Friction Ratio(%); Tip Bearing(kPa); Boring Date. Cone Penetrometer dimensions and testing procedures are in accordance with ASTM standard D-3441-49, or as noted.

IN-SITU, LAB & FIELD TEST DESIGNATIONS

AL	ATTERBERG LIMITS
CA	CHEMICAL ANALYSIS
CN	CONSOLIDATION
CU	CONSOLIDATED UNDRAINED TRIAXIAL
DS	DIRECT SHEAR
MD	MAX. DRY DENSITY
PP	POCKET PENETROMETER
SA	SIEVE ANALYSIS
TV	TORVANE
UC	UNCONFINED COMPRESSION
UU	UNCONSOLIDATED UNDRAINED TRIAXIAL
VS	VANE SHEAR

TYPES OF BORINGS

57 mm CONE PENETRATION; ROTARY WASH; ELECTRONIC CONE PENETROMETER; AUGER BORING (DRY); TEST PIT; DIAMOND CORE BORING; SOIL TUBE

LEGEND OF EARTH MATERIALS (USCS) BASED ON ASTM D2487, D2488

FILL MATERIAL; CLAY (CL or CH); SILT (ML or MH); PEAT and/or ORGANIC MATTER; WELL-GRADED GRAVEL (GW); POORLY-GRADED GRAVEL (GP); SILTY GRAVEL (GM); CLAYEY GRAVEL (GC); POORLY-GRADED SAND (SP); WELL-GRADED SAND (SW); SILTY SAND (SM) or SANDY SILT; CLAYEY SAND (SC) or SANDY CLAY; COBBLES/BOULDERS; IGNEOUS ROCK; SEDIMENTARY ROCK; METAMORPHIC ROCK

NOTE: Visual classifications of earth materials are based on field inspection and or a confirmed or revised with laboratory test results as necessary.

CONSISTENCY CLASSIFICATION FOR SOILS
According to the Standard Penetration Test (ASTM D-1586)

SPT N-Value (Blows/305mm)	Granular	SPT N-Value (Blows/305mm)	Cohesive
0-4	Very loose	<2	Very soft
5-10	Loose	2-4	Soft
11-30	Medium Dense	5-8	Firm
31-50	Dense	9-15	Stiff
>50	Very Dense	16-30	Very Stiff
		>31	Hard

DIST	COUNTY	ROUTE	KILOMETER POST TOTAL PROJECT	SHEET NO.	TOTAL SHEETS
04	SM	101	1.2/2.2	102	103

GEOTECHNICAL PROFESSIONAL
PLANS APPROVAL DATE
GARY PARIKH No. G.E. 666 Exp. 12/31/05 GEOTECHNICAL STATE OF CALIFORNIA
PARIKH CONSULTANTS, INC.
356 SOUTH MILPITAS BLVD.,
MILPITAS CA 95035

The State of California or its officers or agents shall not be responsible for the accuracy or completeness of electronic copies of this plan sheet.

DIVISION OF ENGINEERING SERVICES - GEOTECHNICAL SERVICES

As-Built Log of Test Borings sheet is considered an informational document only. As such, the State of California registration seal with signature, license number and registration certificate expiration date confirm that this is a true and accurate copy of the original document. This drawing is available and presented only for the convenience of any bidder, contractor or other interested party.

DIST.	COUNTY	ROUTE	POST MILES-TOTAL PROJECT	Sheet No.	Total Sheets
04	SM	101	0.8/1.1	135	136

REGISTERED CIVIL ENGINEER — DATE 08-09-2022

REGISTERED PROFESSIONAL ENGINEER Stephen Huang No. C 42289 Exp. 3-31-22 CIVIL STATE OF CALIFORNIA

UNIVERSITY AVENUE POC

LOG OF TEST BORINGS (3 OF 4)

NOTE: A COPY OF THIS LOG OF TEST BORINGS IS AVAILABLE AT OFFICE OF STRUCTURE MAINTENANCE AND INVESTIGATIONS, SACRAMENTO, CALIFORNIA
UNIT: 0703
PROJECT NUMBER & PHASE: 04000007591

BRIDGE No.	Sheet	of
35-0359	25	26

Revisions made to this Log of Test Borings from ~~the original ____ Log of Test Borings are the~~ addition of the following table and notes:

Boring	Station	Offset from "P" Line
02-BR-1	17+20	25' Lt
02-B-1	19+00	40' Rt
02-B-2	20+75	25' Lt

ALL DIMENSIONS ARE IN METERS UNLESS OTHERWISE SHOWN

DESIGN OVERSIGHT
12-16-03
SIGN OFF DATE

FIELD INVESTIGATOR	F. WANG/D. ALEXANDER	DATE	APRIL 2002
DRAWN BY	R. Au	DATE	SEP 2002
CHECKED BY	Y. DAVID WANG	DATE	SEP 2002

PREPARED FOR THE
STATE OF CALIFORNIA
DEPARTMENT OF TRANSPORTATION

Y. DAVID WANG
PROJECT ENGINEER

BRIDGE NO 35-0113
KILOMETER POST 1.43 (PM 0.89)

UNIVERSITY AVENUE OVERCROSSING (WIDEN)
~~LOG OF TEST BORINGS 1 OF 2~~

ORIGINAL SCALE IN MILLIMETERS
CU 04245
DISREGARD PRINTS BEARING
REVISION DATES (PRELIMINARY STAGE ONLY) SHEET OF

\ACAD\201203.BR\LOTB\LOTB-FOUNDATION REPORT.DWG

DIST	COUNTY	ROUTE	KILOMETER POST TOTAL PROJECT	SHEET No	TOTAL SHEETS
04	SM	101	1.1/2.0	1	3

GEOTECHNICAL PROFESSIONAL

PLANS APPROVAL DATE

Lowney Associates
405 Clyde Avenue
Mountain View, Ca 94043

REGISTERED PROFESSIONAL ENGINEER
Laura C. Knutson
No. CE 60534
Exp. 6-30-03
CIVIL
STATE OF CALIFORNIA

STANDARD SOIL SURVEY SHEET

DATE ____ EWL Traffic Index ____ Combined Cohesion of Layers Above: Base ____ Subbase ____ Basement Soil ____ Limits ____

Group	Item	EB-6	EB-1
DESCRIPTION	BORING OR SAMPLE No.	EB-6	EB-1
	TEST NUMBER	1	1
	DATE SAMPLED	7/11/00	7/11/00
	STATION	85+61	87+33
	LINE	UA	UA
	DISTANCE FROM LINE (RT. or LT.)	R-7m	L-14m
	DEPTH OR ELEVATION	0.8m	0.5m
	TYPE OF MATERIAL	CL	CL
SIEVE ANALYSIS	38 mm SQUARE OPENING		
	No. 4 (4708 MICRONS)		
	No. 8 (2380 MICRONS)		
	No. 16 (1190 MICRONS)		
	No. 30 (590 MICRONS)		
	No. 50 (297 MICRONS)		
	No. 200 (74 MICRONS)		
	5 MICRON		
	1 MICRON		
COMPACTION	IN-PLACE DENSITY (WET WT. kN/m³)		
	IN-PLACE MOISTURE (PERCENT)		
	MAXIMUM DENSITY (kN/m³)		
	OPT. MOISTURE (PERCENT)		
	RELATIVE COMPACTION (PERCENT)		
BIT MIX	OIL RATIO – TYPE OF BITUMEN		
	STABILOMETER VALUE		
	COHESION		
	SWELL		
	STABILOMETER VALUE AFTER MVS		
CTB	% CEMENT		
	OPT. MOISTURE		
	DENSITY		
	COMP. STRENGTH AT 7 DAYS		
ATTERBERG LIMITS	LIQUID LIMIT	35	
	PLASTICITY INDEX	17	
	SAND EQUIVALENT		
	PRODUCT P.I.X.-200		
R-VALUE	MOISTURE		13
	DENSITY		19.5
	R-VALUE-STABILOMETER		12
	R-VALUE BY EXPANSION		
	COHESION		
	THICKNESS OF COVER REQUIRED		

SOIL CLASSIFICATION

PRIMARY DIVISIONS			SOIL TYPE	SECONDARY DIVISIONS
COARSE GRAINED SOILS (MORE THAN HALF OF MATERIAL IS LARGER THAN No. 200 SIEVE SIZE)	GRAVELS (MORE THAN HALF OF COARSE FRACTION IS LARGER THAN No. 4 SIEVE)	CLEAN GRAVELS (Less than 5% Fines)	GW	Well graded gravels, gravel-sand mixtures, little or no fines
			GP	Poorly graded gravels or gravel-sand mixtures, little or no fines
		GRAVEL WITH FINES	GM	Silty gravels, gravel-sand-silt mixtures, plastic fines
			GC	Clayey gravels, gravel-sand-clay mixtures, plastic fines
	SANDS (MORE THAN HALF OF COARSE FRACTION IS SMALLER THAN No. 4 SIEVE)	CLEAN SANDS (Less than 5% Fines)	SW	Well graded sands, gravelly sands, little or no fines
			SP	Poorly graded sands or gravelly sands, little or no fines
		SANDS WITH FINES	SM	Silty sands, sand-silt-mixtures, non-plastic fines
			SC	Clayey sands, sand-clay mixtures, plastic fines
FINE GRAINED SOILS (MORE THAN HALF OF MATERIAL IS SMALLER THAN No. 200 SIEVE SIZE)	SILTS AND CLAYS (LIQUID LIMIT IS LESS THAN 50 %)		ML	Inorganic silts and very fine sands, rock flour, silty or clayey fine sands or clayey silts with slight plasticity
			CL	Inorganic clays of low to medium plasticity, gravelly clays, sandy clays, silty clays, lean clays
			OL	Organic silts and organic silty clays of low plasticity
	SILTS AND CLAYS (LIQUID LIMIT IS GREATER THAN 50 %)		MH	Inorganic silts, micaceous or diatomaceous fine sandy or silty soils, elastic silts
			CH	Inorganic clays of high plasticity, fat clays
			OH	Organic clays of medium to high plasticity, organic silts
HIGHLY ORGANIC SOILS			PT	Peat and other highly organic soils
			FILL	Fill soils

DEFINITION OF TERMS

U.S. STANDARD SIEVE SIZE: 200, 40, 10, 4 — CLEAR SQUARE SIEVE OPENINGS: 3/4", 3", 12"

SILTS AND CLAY	SAND			GRAVEL		COBBLES	BOULDERS
	FINE	MEDIUM	COARSE	FINE	COARSE		

GRAIN SIZES

SAND AND GRAVEL	BLOWS/FOOT*
VERY LOOSE	0-4
LOOSE	4-10
MEDIUM DENSE	10-30
DENSE	30-50
VERY DENSE	OVER 50

RELATIVE DENSITY

SILTS AND CLAYS	STRENGTH+	BLOWS/FOOT*
VERY SOFT	0-1/4	0-2
SOFT	1/4-1/2	2-4
MEDIUM STIFF	1/2-1	4-8
STIFF	1-2	8-16
VERY STIFF	2-4	16-32
HARD	OVER 4	OVER 32

CONSISTENCY

PLASTICITY CHART

LEGEND OF BORING OPERATIONS

Revisions made to this Log of Test Borings from the original ____ Log of Test Borings are the addition of the following table and notes:

Boring	Station	Offset from "P" Line
EB-6	22+30	25' Lt
EB-9	23+75	10' Lt

DIVISION OF ENGINEERING SERVICES - GEOTECHNICAL SERVICES

As-Built Log of Test Borings sheet is considered an informational document only. As such, the State of California registration seal with signature, license number and registration certificate expiration date confirm that this is a true and accurate copy of the original document. This drawing is available and presented only for the convenience of any bidder, contractor or other interested party.

DIST.	COUNTY	ROUTE	POST MILES-TOTAL PROJECT	Sheet No.	Total Sheets
04	SM	101	0.8/1.1	136	136

REGISTERED CIVIL ENGINEER — DATE 08-09-2022

UNIVERSITY AVENUE POC

LOG OF TEST BORINGS (4 OF 4)

NOTE: A COPY OF THIS LOG OF TEST BORINGS IS AVAILABLE AT OFFICE OF STRUCTURE MAINTENANCE AND INVESTIGATIONS, SACRAMENTO, CALIFORNIA

UNIT: 0703
PROJECT NUMBER & PHASE: 04000007591

BRIDGE No.	Sheet	of
35-0359	26	26

REGISTERED PROFESSIONAL ENGINEER
Stephen Huang
No. C 42289
Exp. 3-31-22
CIVIL
STATE OF CALIFORNIA

C. B. Bulter
DESIGN OVERSIGHT
September 6, 2000
SIGN OFF DATE

DRAWN BY: E. Barnikel
CHECKED BY: L. Knutson

J. Hughes
FIELD INVESTIGATION BY:
DATE: July 11, 2000

LOWNEY ASSOCIATES
Environmental/Geotechnical/Engineering Services

PREPARED FOR THE STATE OF CALIFORNIA DEPARTMENT OF TRANSPORTATION

L. Knutson
PROJECT ENGINEER

BRIDGE NO.
KILOMETER POST 1.1/2.0

~~LOG OF TEST BORING 2 OF 4~~

ORIGINAL SCALE IN MILLIMETERS FOR REDUCED PLANS 0 10 20 30 40 50 60 70 80 90 100

CU
EA

DISREGARD PRINTS BEARING EARLIER REVISION DATES

REVISION DATES (PRELIMINARY STAGE ONLY) | SHEET | OF